OPERATIONS FLOW DIAGRAM - DELAWARE CITY REFINERY

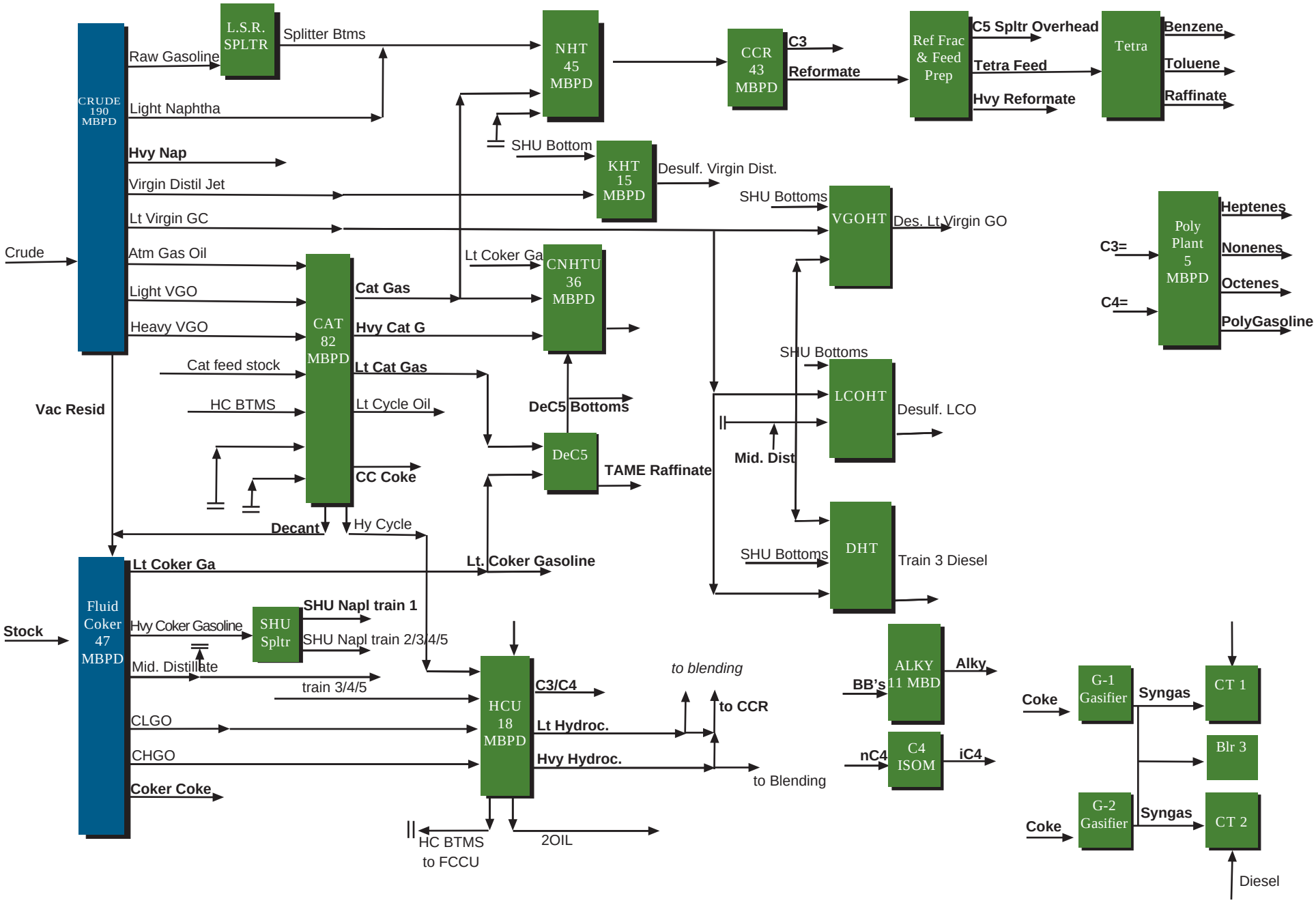

11/08/05