A Change in Direction in ICP-MS

by Shane Elliott, Michael Knowles, and Iouri Kalinitchenko

Inductively coupled plasma–mass spectrometry (ICP-MS) is a powerful technique for elemental and isotopic analysis that combines the efficiency and ease of use of the ICP with the sensitivity and selectivity of MS. As a result, ICP-MS has gained wide acceptance internationally as an elemental analysis technique preferred for its productivity, simplicity of spectra, and low levels of detection.

This article discusses a change in direction in ICP-MS technology. The **Varian** (Melbourne, Australia) ICP-MS (Figure 1) is a quadrupole ICP-MS that is able to produce tunable gigahertz sensitivity simultaneously with very low interferences and background levels. This marked sensitivity (a gigahertz equals 1000 million counts per sec per mg/L) can be traced to a new direction in the ion beam: Instead of ions traveling linearly through the ICP-MS interface and quadrupole, the analytical ion beam is reflected through 90°. This is achieved by a reflecting ion optics system that efficiently reflects and focuses analyte ions into the quadrupole mass analyzer. Up to 80% or more[1] of the analyte ions passing through the skimmer cone are reflected by the ion mirror and directed to the quadrupole, explaining the very high sensitivity of the system.

Figure 1 Quadrupole ICP-MS with tunable gigahertz sensitivity.

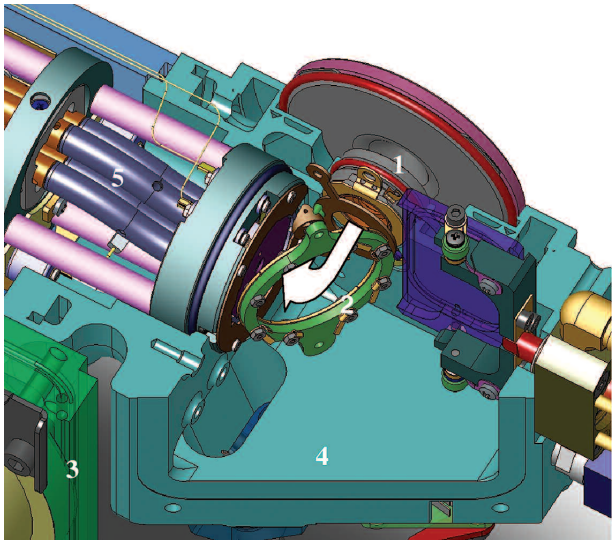

Figure 2 The 90° reflecting ion optics system of the ICP-MS. Ions enter through the interface region via the skimmer cone (1) before being reflected (arrow) and focused by the ion mirror (2). The analyte ions are reflected while photons and neutrals pass directly through the ring to a V-301 turbomolecular pump (***Varian***), which is directly connected to the interface region. The turbomolecular pump (3) is shown swung away from its operating position (4). Analyte ions are focused into the quadrupole mass analyzer. A set of curved fringe rods (5) create a double off-axis system, which further contributes to the very low background of the ICP-MS.

System technology

The 90° reflection of the ion beam is facilitated by the system's patented[2] ion mirror (**Varian**) (Figure 2). The ion mirror is a hollow ring of four electrodes, each individually computer controlled. The electrical potentials applied to the electrodes create a parabolic electrostatic field that reflects the ion beam to a focal point at the quadrupole entrance. In optical terms it is similar to the focusing characteristics of a parabolic mirror. One of the key benefits of this approach is that the parabolic field ensures that ions of higher kinetic energy are brought back to the focal point along with ions of lower kinetic energy. This is especially important in ICP-MS to ensure maximum ion transmission efficiency regardless of the mass of the ion.

The 90° reflecting ion mirror achieves a transmission efficiency gain of up to 200 times compared to the theoretical calculations for conventional linear ICP-MS systems,[1] which translates into sensitivity that can be adjusted on the fly from low megahertz (millions of counts per sec per mg/L) to gigahertz (1000 million counts per sec per mg/L). This is called MultiMode tuning. Sensitivity can be adjusted instantaneously during any individual sample analysis from low to high via computer-controlled adjustments of the ion mirror and

Table 1 Typical performance specifications for the ICP-MS

Sensitivity (High-sensitivity mode, million counts/sec/mg/L)		
	^{9}Be	>50
	^{115}In	>1000
	^{232}Th	>500
Precision (10 replicates, 20 min)		<3%
Oxides		CeO^{+}/Ce^{+} <3%
Doubly charged		Ce^{++}/Ce^{+} <2%
Background		<5 at 5 amu
Sensitivity (Low-sensitivity mode, million counts/sec/mg/L)		
	^{9}Be	>5
	^{115}In	>50
	^{232}Th	>20
Precision (10 replicates, 20 min)		<4%
Long-term stability (10 µg/L multielement standard aspirated for 4 hr)		<4%
Oxides		CeO^{+}/Ce^{+} <1%
Doubly charged		Ce^{++}/Ce^{+} <2%
Background		<2 at 5 amu

extraction optics. This changes the focal point of the ion beam so that a lower-sensitivity setting can be used for highly concentrated elements and a higher-sensitivity setting can be used for lower-concentration elements. The result is the world's first all-digital detector with nine orders of dynamic range.

MultiMode can also be used to tune performance for different sample types—lower-sensitivity settings for high-matrix samples such as diluted soils, sediments, sludges, and wastes and very high sensitivity for the analysis of chemicals in the semiconductor industry and trace environmental applications. The tunable gigahertz sensitivity of the system is also well suited for laser ablation applications, allowing microscopic features to be analyzed while maintaining measurable signal levels.

A significant development is that these sensitivity figures are achieved without compromising performance for background and interferences. Example performance figures for MultiMode are shown in Table 1 (keep in mind that the sensitivity is completely tunable and background and interferences can be controlled within the ranges shown). Further improvements in interferences can also be achieved using specialized sample introduction systems. The CeO^{+}/Ce^{+} ratio is an important indicator because it shows that the high sensitivity of the system is not being achieved merely by forcing more sample into the ICP-MS, loading the

plasma with water and oxygen. Increasing sensitivity artificially in this way compromises the performance of the sample introduction system, reduces dynamic range, and leads to drift due to cone blockage with real samples.

High sensitivity can contribute to lower detection limits, but a detection system with a wider dynamic range is needed so that gains in detection limits are not lost in a more restricted upper dynamic range. The ideal characteristics of a detector would be to combine wide linearity with low noise and ease of use. Traditional ICP-MS detectors combine an insensitive analog section with a pulse-counting section for lower concentration ranges. There are two problems with this dual-mode approach. First, it requires time-consuming multipoint cross-calibration between the pulse and analog sections, which tends to drift with aging of the analog section. Second, the linear dynamic range of the pulse-only section can have an upper concentration limit of just 10–50 µg/L. This means that responses for most elements must be cross-calibrated. The **Varian** ICP-MS uses an ETP DM169 detector (**ETP Electron Multipliers Pty Ltd.,** Sydney, Australia), an all-digital pulse-counting detector with an effective count rate upper limit that is 10,000 times that of standard pulse-counting multipliers.[3] The detector consists of three sections:

- An ion conversion section, where incoming ions are converted into measurable electrons
- A control section, where the signal is dynamically attenuated from 90% efficiency for trace signals to 1 in 10,000 efficiency for intense signals
- An amplification section, where the resultant signals are finally processed for measurement.

The DM169 is an all-pulse-counting design, which avoids the com-

plex analog-to-digital calibrations that are so time consuming with dual-mode designs. The detector has the ideal dynamic range to match the tunable gigahertz sensitivity of the **Varian** ICP-MS.

Applications of MultiMode tuning

This work shows the capabilities of the **Varian** ICP-MS by examining suitable normal-sensitivity conditions for difficult sample types and extremely high-sensitivity conditions for a low-level laser ablation application.

Normal-sensitivity analysis of digested environmental samples

A series of reference solutions were prepared equivalent to 1 g of sample digested and diluted to 100 mL and then diluted another 10 times for analysis. Aqueous calibration standards were prepared in 1% nitric acid. Internal standards of ^{6}Li, ^{89}Y, ^{115}In, ^{159}Tb, and ^{209}Bi were used. The certified reference materials (CRMs) were River Sediment Solution A: CRM-RS-A; Soil Solution A: CRM-Soil-A; and Estuarine Sediment Solution CRM-ES. They were measured in duplicate. The authors' results on the Estuarine Sediment were erroneous for Cd and Sb due to contamination in their laboratory, and are not reported. The **Varian** ICP-MS was tuned to normal-sensitivity conditions; a mid-mass sensitivity of approx. 44 million counts/sec/mg/L was selected with a CeO^{+}/Ce^{+} ratio of just 0.7%.

Recovery results for these CRMs are shown in Table 2. It can be seen that excellent recoveries for these varying sample types are achieved across the mass range. To assess long-term stability, the CRMs were then analyzed in continuous sequence with no rinsing for a period of 5 hr. The CRMs were alternated to create significant variations in the ion flux entering the ICP-MS. The long-term stability of the system is very good.

Table 2 Recoveries for Estuarine Sediment CRM

Isotope	Measured (µg/L)	Certified (µg/L)	% Recovery
^{9}Be	2.1	2	105.0
^{51}V	96.0	100	96.0
^{53}Cr	83.0	80	103.8
^{59}Co	9.8	10	98.0
^{60}Ni	30.9	30	103.0
^{65}Cu	20.7	20	103.5
^{66}Zn	156.8	150	104.5
^{75}As	10.9	10	109.0
^{82}Se	4.6	5	92.0
Pb	30.0	30	100.0
^{232}Th	10.6	10	106.0

High-sensitivity analysis and lower detection limits for LA-ICP-MS

In laser ablation ICP-MS (LA-ICP-MS), a laser is directed to the surface of a solid sample and the resultant ablated material is swept up into the plasma of the ICP-MS. Spot sizes refer to the size of the crater left on the surface of the sample; these vary with the nature of the laser, the efficiency of the coupling of the laser to the sample, and the controlling parameters used.[4] A typical laser crater might measure 10–50 µm in diameter with a desirable goal being to reduce spot sizes in order to allow the examination of smaller and smaller features and of course to minimize damage to the sample. Against this, higher sensitivity will be needed if smaller spot sizes are to be routinely used.

LA-ICP-MS finds application in areas in which these discrete features can yield important information, such as the analysis of growth bands in coral, information about historical seawater temperatures, and analysis of fish otoliths to monitor pollution history. In geochemistry, both bulk laser and small spot laser ablation techniques are used. A classic example of the latter is the analysis of fluid inclusions in geochemical structures. Microscopic fluid inclusions in minerals give important information about the chemical composition of crustal fluids and are used in the study of hydrothermal transport of metals and ore-forming processes.[5]

In bulk geochemical LA-ICP-MS, it is common practice to prepare samples by fusion techniques to create a glassy pellet. LA-ICP-MS can then be calibrated using a series of NIST standard reference glasses in order to quantify analytes found in geochemical samples that have been fused prior to analysis.[6] The NIST glass series is available in four standards of varying concentrations covering a dynamic range of 10,000 times in concentration from a fraction to hundreds of milligrams per kilogram. The most widely used of these glasses is NIST 612, which includes elements at concentrations readily measurable by conventional LA-ICP-MS. However, the least concentrated of the standards, NIST 616 and NIST 614, are very rarely used in

Table 3 Duplicate analysis results of NIST glasses by LA-ICP -MS showing excellent agreement with the certified values*

Isotope	NIST 616 mg/kg in the solid Found	NIST 616 mg/kg in the solid Certified	NIST 614 mg/kg in the solid Found	NIST 614 mg/kg in the solid Certified
^{11}B	0.21	(0.2)	1.30	(1.3)
^{47}Ti	2.54	(2.5)	3.11	(3.1)
^{57}Fe	11.19	(11)	12.6	(13.3)
^{59}Co	0.07	NA	0.76	(0.73)
^{60}Ni	0.81	NA	1.09	(0.95)
^{71}Ga	0.26	(0.23)	1.50	(1.3)
^{85}Rb	0.1	(0.1)	0.88	0.855
^{107}Ag	0.08	NA	0.48	0.42
^{111}Cd	0.19	NA	0.56	(0.55)
$^{206–8}Pb$	2.41	NA	2.68	2.32
^{238}U	0.077	0.0721	0.84	0.823

*Values in parentheses are not certified and are for information only. At these low levels, many element values are not certified.

LA-ICP-MS because many of the elements are undetectable at these concentrations.

The high-sensitivity MultiMode tuning of the ICP-MS permits the analysis of these very trace- level analytes in the lowest NIST glasses. This is a significant development, showing the utility of high-sensitivity LA-ICP-MS for previously difficult analyses. In this work, an LSX-200 laser ablation system (wavelength 266 nm) (**CETAC Technologies,** Omaha, NE) was used to obtain the successful calibration of these NIST glasses.[7]

The concentrations of B in the lowest standard is 200 µg/kg (ppb) in the solid material. After calibrating, the glasses were read back as samples in duplicate with very good recoveries for all elements in the 10–100 µg/kg range, as shown in Table 3.

Conclusion

The **Varian** ICP-MS represents a significant change in direction for this elemental analysis technique, one that will set the benchmark for the performance of future technology. The patented 90° reflecting and focusing ion mirror has created a gigahertz quadrupole ICP-MS while providing good performance on low interferences and background. The ICP-MS enables on-the-fly MultiMode tuning within any sample and optimized tuning for specific applications. Normal-sensitivity tuning for high-matrix environmental samples with excellent recoveries and stability was shown, along with high-sensitivity tuning to offer the lowest-ever laser ablation detection limits in the direct analysis of solids. The high sensitivity of the system also provides advantages for other industries such as semiconductor chemicals and wafer manufacturers; this will be the subject of future articles.

References

1. Kalinitchenko I. A new ICP-MS system. Oral presentation, Winter Conference on Plasma Spectrochemistry. Garisch-Partenkirchen, Germany, Jan 2003.
2. Kalinitchenko I. Ion optical system for a mass spectrometer. Australian patent #750860, Nov 14, 2002.
3. Stresau D, Hunter KL. Ion counting beyond 10 GHz using a new detector and conventional electronics. Technical article. Melbourne, Australia: Scientific Glass Engineering Pty. Ltd.
4. Elliott S. The importance of spatial resolution (spot size) in laser ablation ICP-MS. Varian instruments at work: ICP-MS May 1997 issue 14.
5. Günther D. Laser ablation ICP-MS in the earth sciences—principles and applications. In: Sylvester P, ed. Short course series, vol. 29, chap 4. Mineralogical Association of Canada, 2001.
6. Elliot S. Analysis of fused basalt and granite samples by laser ablation ICP-MS. Varian instruments at work: ICP-MS Mar 1997 issue 12.
7. Elliott S. Laser ablation of low-level NIST glass reference materials on the high sensitivity Varian ICP-MS. Varian instruments at work: ICP-MS Mar 1997 issue 22.

The authors are with ***Varian Australia Pty. Ltd.,*** 679 Springvale Rd., Mulgrave 3170 Victoria, Australia; tel.: +61 3 9560 7133; fax: +61 3 9560 7950; e-mail: shane.elliott@varianinc.com.