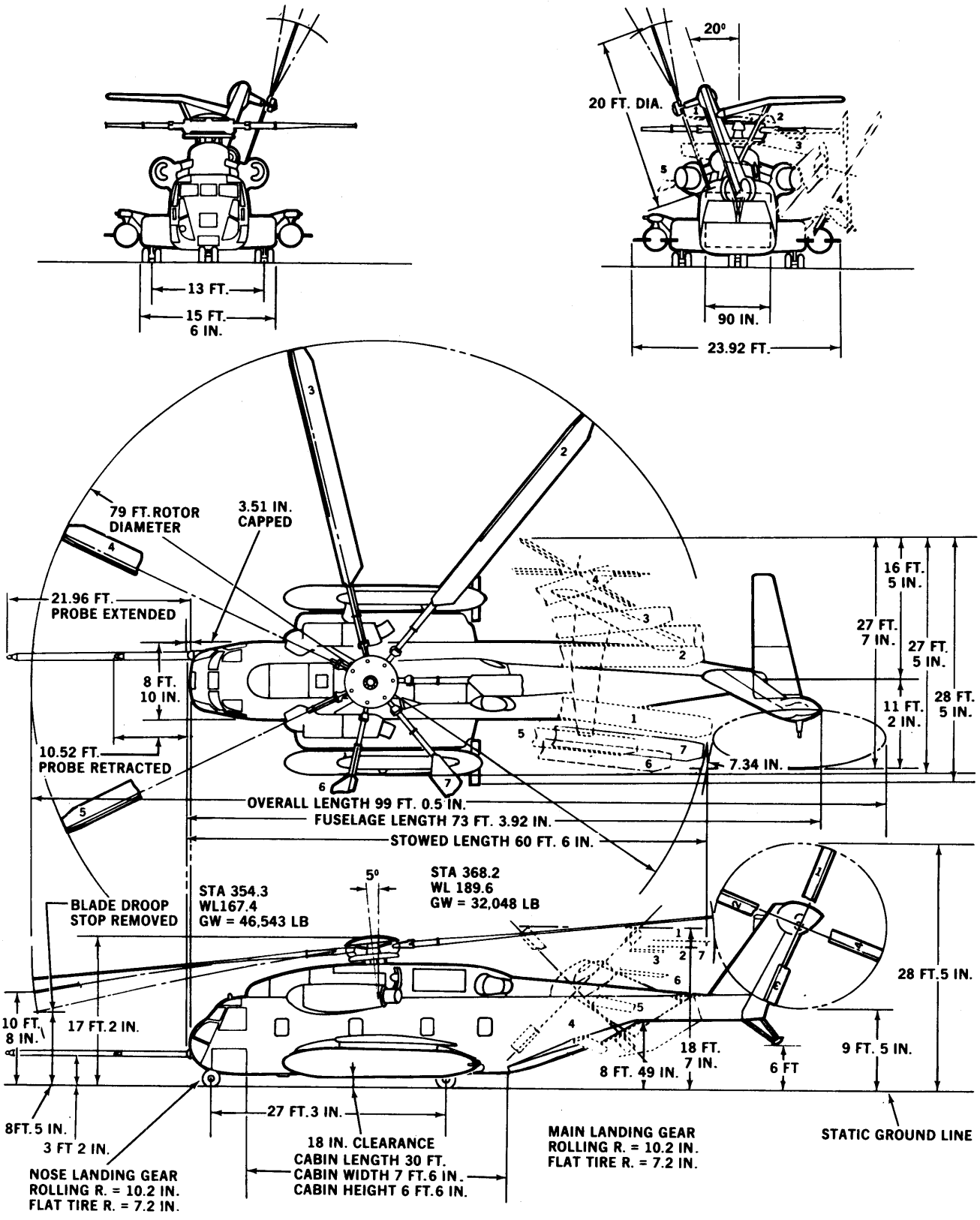
13 FT.
15 FT. 6 IN.
20°
20 FT. DIA.
90 IN.
23.92 FT.
79 FT. ROTOR DIAMETER
3.51 IN. CAPPED
21.96 FT. PROBE EXTENDED
8 FT. 10 IN.
10.52 FT. PROBE RETRACTED
16 FT. 5 IN.
27 FT. 7 IN.
27 FT. 5 IN.
11 FT. 2 IN.
28 FT. 5 IN.
7.34 IN.
OVERALL LENGTH 99 FT. 0.5 IN.
FUSELAGE LENGTH 73 FT. 3.92 IN.
STOWED LENGTH 60 FT. 6 IN.
5°
STA 368.2
WL 189.6
GW = 32,048 LB
STA 354.3
WL167.4
GW = 46,543 LB
BLADE DROOP STOP REMOVED
28 FT.5 IN.
10 FT. 8 IN.
17 FT.2 IN.
18 FT. 7 IN.
8 FT. 49 IN.
6 FT
9 FT. 5 IN.
8FT.5 IN.
3 FT 2 IN.
27 FT.3 IN.
18 IN. CLEARANCE
CABIN LENGTH 30 FT.
CABIN WIDTH 7 FT.6 IN.
CABIN HEIGHT 6 FT.6 IN.
MAIN LANDING GEAR
ROLLING R. = 10.2 IN.
FLAT TIRE R. = 7.2 IN.
STATIC GROUND LINE
NOSE LANDING GEAR
ROLLING R. = 10.2 IN.
FLAT TIRE R. = 7.2 IN.

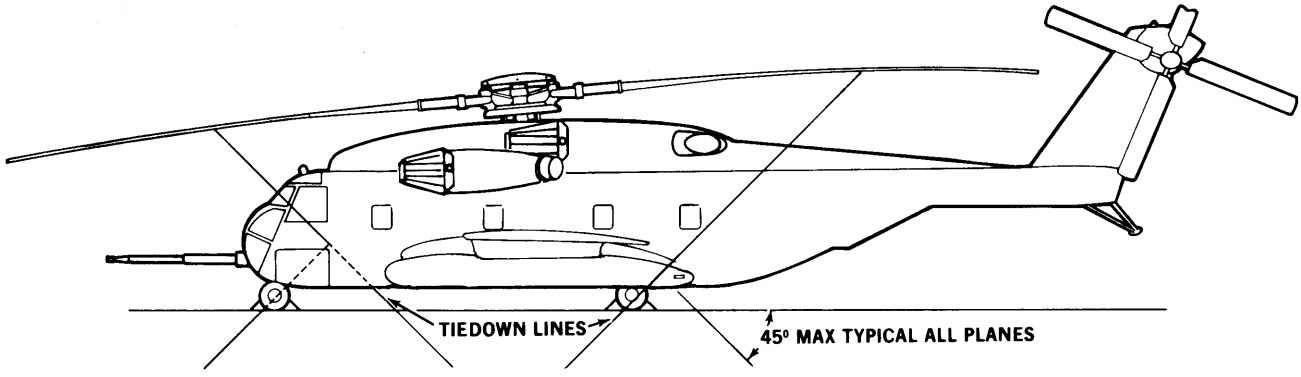


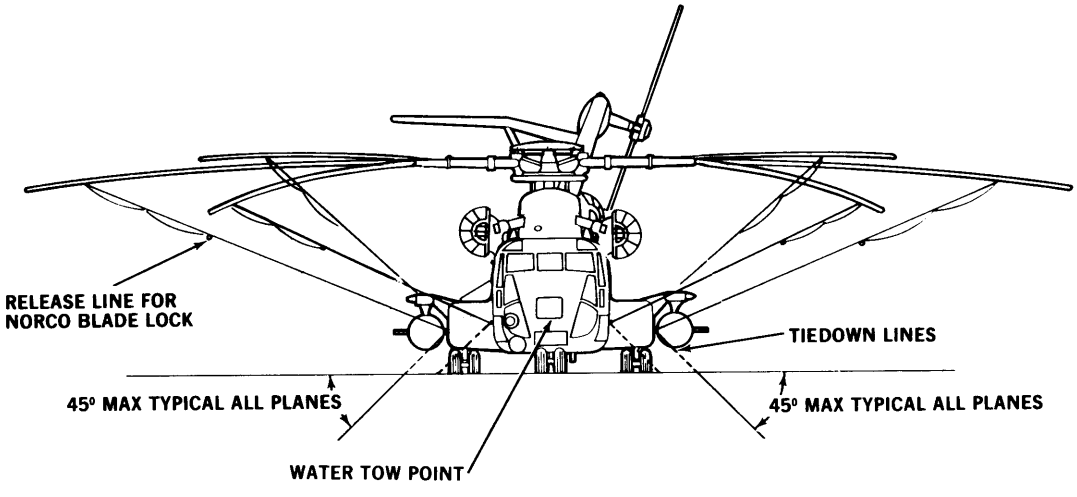


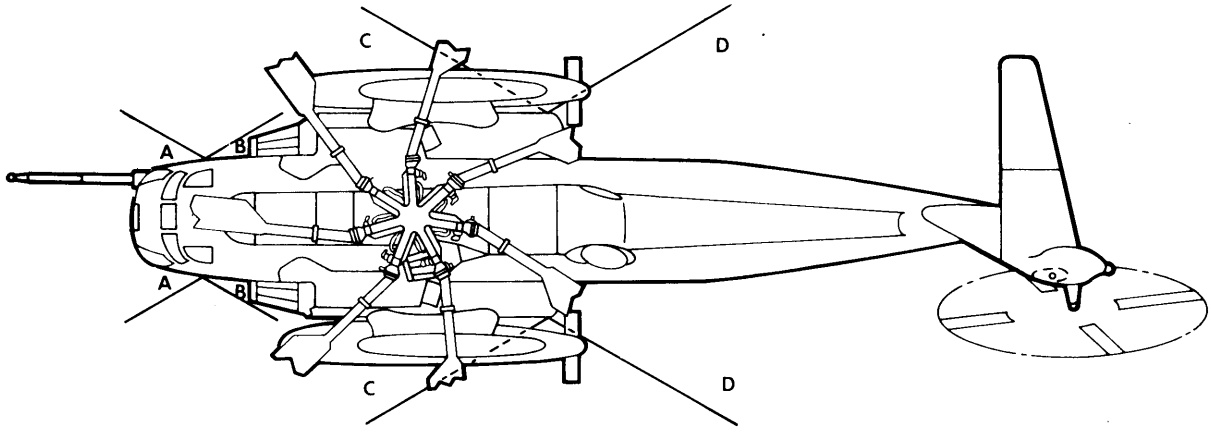


ANGLE A MUST BE APPROXIMATELY EQUAL TO ANGLE B
ANGLE C MUST BE APPROXIMATELY EQUAL TO ANGLE D