21, rue d'Artois, F-75008 Paris
http://www.cigre.org

13-104

Session 1998

NEW INTERRUPTING AND DRIVE TECHNIQUES TO INCREASE HIGH VOLTAGE CIRCUIT BREAKER PERFORMANCE AND RELIABILITY

D. DUFOURNET **J. OZIL**
ALSTOM Ltd.
(France)

F. SCIULLO **A. LUDWIG***
ALSTOM Ltd.
(Switzerland)

SUMMARY

High voltage circuit breaker technology has seen considerable evolution during the last years, especially through the application of new interrupting principles which permit to highly reduce the energy requirements of the circuit breaker drive. By making use of the arc energy in a higher degree, it is now possible to build a circuit breaker range from 72.5 kV to 550 kV with low energy spring mechanisms.

The paper is presenting different interrupting-chamber principles which have been developed recently. They are distinguished by the fact that the cold gas compression, necessary to ensure interruption of small currents, is effectuated only during a controlled part of the overall interrupter stroke. These principles allow at the same time to improve the performance on capacitive current switching. This is of particular importance as IEC standards will introduce a new class of circuit breakers (C2) with a very low probability of restrikes to be tested on circuit breakers with preconditioned contacts. This leads to the requirement of higher voltage withstand during capacitive current switching on modern interrupting chambers.

New simulation tools have been developed to optimize the dimensioning of the interrupting chamber and associated trip and close energies indispensable for safe functionning. The theoretical part is supported by simulation examples with different software tools, applied for dimensioning of mechanical operation and to guarantee capacitive current-, short-line fault and terminal fault performance.

The new interrupting chamber developments enable to highly reduce operating energies and chamber porcelain diameters. The paper shows the evolution of the operating energy necessary for a given performance. The lower drive energy requirements of the modern chamber types have led to the development of a completely new spring operating mechanism range. Three mechanisms cover the complete close-open energy field up to 4500 Joules.

The final report of the second international enquiry on high voltage circuit breaker failures and defects in service (CIGRE WG 13.06) [7] shows that the availability of circuit breakers depends mainly on the reliability of its mechanic. The paper shows, how the mechanical endurance of operating mechanisms can be influenced by design parameters. Special design solutions have been chosen in order to minimize operating impacts generated by the operating mechanism and transmitted to the circuit breaker pole. Moreover, by using a simple design the number of parts used in the mechanism is reduced by one third compared to the previous drive generation.

These measures and the lower operating energy allowed by the new interrupting chambers, will contribute to a higher reliability of the circuit breakers.

Key words

Circuit breaker - Interrupting principles - operating device - Means of simulation - Spring drive mechanism of the second generation - Spring drive mechanism of the third generation

1. INTRODUCTION

High voltage circuit breakers have undergone a considerable development as a result of the introduction of new interrupting techniques and of new operating devices. In order to support this, major attention had to be paid to the development of calculation tools, which allow the dynamic operation as well as capacitive and fault current interruption behaviour of the circuit breaker to be simulated.

This evolution is the result of the continuous need for improving the reliability of circuit breakers, which is achieved in particular by a reduction of the operating energy. Furthermore of the modifications of the IEC standards will in certain cases foresee more severe requirements e.g. capacitive switching than in the past.

The report successively presents the new type of interrupting chambers which have been developed, the means of simulation which were utilized for the dimensioning, examples of the evolution of circuit breakers compared to the previous generations and the corresponding development of the drives which operate the circuit breakers.

---

* GEC Alsthom Ltd., Sprecher High Voltage Equipment - 5036 OBERENTFELDEN

2. NEW TYPES OF INTERRUPTING CHAMBERS

New types of SF6 interrupting chambers, which implement innovative interruption principles, have been developed over the course of the past ten years, with the objective of reducing the operating energy of the circuit breakers and consequenctly increasing their reliability.

The desirable reduction of the operating energy was in a first stage achieved by a reduction of the energy consumed for the compression of the gas required for quenching the arc.

In a classical device with auto-pneumatic (puffer-type) quenching, the overpressure necessary for quenching the arc is essentially produced by compressing the gas contained in a volume formed by a fixed piston and by a moving cylinder. The energy necessary for compressing the gas is relatively high since the overpressure generated has to ensure the interruption of the highest fault currents (test duties SLF90 and T100 of the IEC 56).

One of the first developments of the interrupting chambers is the technique of thermal effect quenching (or self-blast), where the quenching power necessary for the interruption of high currents is obtained by thermal expansion of the gas contained in a constant volume. An auto-pneumatic quenching assistance enables the interruption of the currents lower than 30 % of the assigned interruption capacity. This results in a great reduction of the gas compression energy and as a consequence also of the energy, which has to be provided by the drive of the circuit breaker. Furthermore the quenching piston of these devices, dimensioned for the interruption of 30 % of the maximum fault current, is of a smaller diameter than those of auto-pneumatic circuit breakers, a fact which allows the mass of the moving parts to be reduced and therefore also the kinetic energy to be supplied by the drive.

More recent realizations of self-blast interrupting chambers have enabled this interruption technique to be perfected by the thermal effect and to achieve either further reduction of the operating energy or an improvement of the performance of the circuit breaker in interrupting capacitive currents. This last point is particularly important at the current moment as IEC 56 standards foresee to introduce a new class of circuit breakers (C2) with a very low probability of restrikes. This has to be proved by an increased number of tests on an apparatus preconditioned by 3 interruptions at 60 % of its short-circuit interruption capacity [1].

The following paragraphs provide examples of these self-blast interrupting chambers of the second generation, designated as "double volume", which have been developed over the course of the past five years.

2.1 Interrupting chambers with reduced compression stroke

These interrupting chambers are characterized by the fact, that the compression of the gas necessary for the interruption of low currents is effected only during a controlled part of the overall stroke of the contacts, in general over less than 50 % of it. Their operation is illustrated in figure 1.

One can distinguish between two phases during the opening of the circuit breaker:

- The first phase, between the positions 1 and 2, the relative movement between the piston (A) and the blast cylinder (B) is utilized for compressing the gas of the volume Vc. The overpressure generated this way is transferred to the expansion volume Vt after the leaf valve (C) opens.
- During the second phase, between the positions 2 and 3, the piston and the cylinder pass practically together up to their released position. The relative movement of the piston and the cylinder is achieved by a system of mechanical links as shown on the figure 1. It could be achieved by other mechanical or pneumatic devices. These principles were the subject of several patents [2] [3]. During this second phase, no more compression of the gas takes place; as a result the energy supplied by the drive can be reduced to a value sufficient to maintain the opening speed of the device. Contrary to what takes place in auto-pneumatic devices, the operating element does not have to overcome the high overpressures generated in the expansion volume Vt. The opposing force comes solely from the reduced overpressure generated in the compression volume Vc.

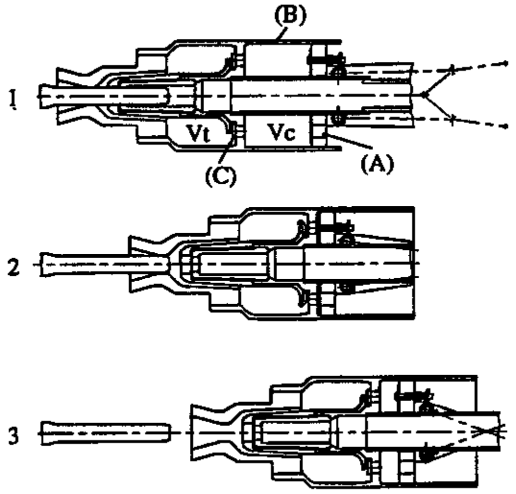

Fig. 1: **Interrupting chamber with reduced compression stroke**
Vc: Compression volume
Vt: Expansion volume
(A): Piston
(B): Blast cylinder
(C): Leaf valve

For the interruption of low currents, the overpressure produced during the compression phase is sufficient to guarantee the interruption within the required range of arcing-time durations. For the interruption of high currents, the energy of the arc is utilized to increase the pressure of the gas of the volume Vt, the overpressure produced this way generates the necessary quenching power for extinguishing the arc during the transition of the current zero.

2.2 Interrupting chamber with rear exhaust

Figure 2 illustrates an example of a "double volume" interrupting chamber with high interruption performance for capacitive switching, also patented by our company [4]:

- During the first phase, between the positions 1 and 2, the compression of the gas in Vc puts the volumes Vc, Vt and Ve into overpressure. This permits in particular to have a high gas density in the vicinity of the arcing contacts (volume Ve) at the instant of the contact separation (position 2). As result the dielectric withstand between the contacts during the interruption of low currents is increased. This type of chamber consequently has a high performance for the interruption of capacitive currents and is thus well suitable for fulfilling the future specifications of the IEC standards.
- During the second phase, between the positions 2 and

3, the volumes Vc and Ve exhaust to the rear through the openings (1) and (2). The pressure drop in volume Vc results in closing of the leaf valve (C) and thus in the separation of the volume Vt from volume Vc. In volume Vt, the overpressure can be increased by thermal expansion of the gas. This generates the quenching power necessary for the interruption in the same manner as described in the previous paragraph.

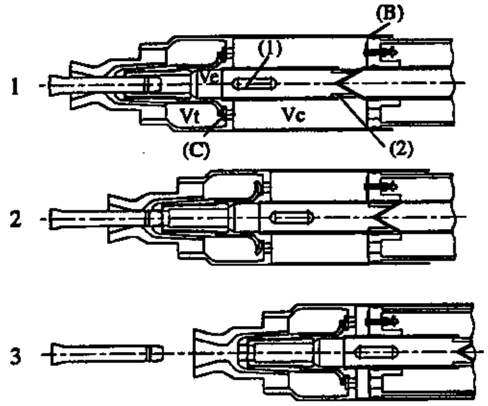

Fig. 2: **Interrupting chamber with rear exhaust**
Vc: Compression volume
Vt: Expansion volume
Ve: Dead volume
(B): Blast cylinder
(C): Leaf valve
(1) and (2): Exhaust openings

2.3 Interrupting chamber with double contact displacement

A significant reduction of the operating energy can also be achieved by reducing the kinetic energy consumed during opening. One of the possible methods consists of displacing the two arcing contacts in opposite directions. This means that for each contact half of that speed, which is required in a classical arrangement with one moving contact only, is necessary. Figure 3 illustrates an example of an interrupting chamber of this type, which combines the double contact displacement with a reduced compression stroke.

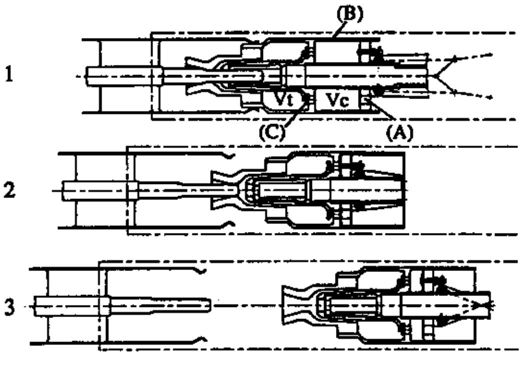

Fig. 3: **Interrupting chamber with double contact displacement**
Vc: Compression volume
Vt: Expansion volume
(A): Piston
(B): Blast cylinder
(C): Leaf valve

In comparison with the generation of auto-pneumatic circuit breakers, these three presented interrupting principles enable to reduce the required gas compression energy by a factor of around 9. Today this second generation of self-blast circuit breakers has numerous industrial applications, of which some examples will be given in paragraph 4.

3. MEANS OF SIMULATION UTILIZED FOR THE DIMENSIONING

The dimensioning of self-blast (or thermal effect) interrupting chambers necessitates the use of high performance calculation software. Predetermination of the mechanical behaviour as well as interruption capacities for capacitive and high fault currents can be carried out. The parameters which significantly influence the performance of this new chamber types are more numerous than in case of a classical auto-pneumatic interrupting chamber. It is therefore indispensable, that the manufacturer is in a position to simulate the operation of these circuit breakers well, in order to limit the number of short-circuit tests necessary for their development.

Three examples of programmes currently utilized for the development of high voltage circuit breakers are presented below. One also has the possibility of using other more sophisticated programmes with physical model imaging of the arc, such as the code ARTUR of GEC ALSTHOM LTD, for calculating the evolution as a function of time of the characteristic values of the arc and the gas flow in the whole interrupting chamber [5].

3.1 Simulation of the dynamic operation

The stepwisecalculation of the displacement of the contacts and of the overpressure generated in both chamber volumes is carried out by the integration of the equations of the movement. The acceleration of the moving parts depends on its mass, the forces released by the drive, the friction losses and the resisting force exerted in each pole due to the overpressure in the compression volumes.

Figure 4 shows an example of the simulation carried out for optimizing the no-load operation of a circuit breaker for 145 kV / 40 kA / -40 deg C.

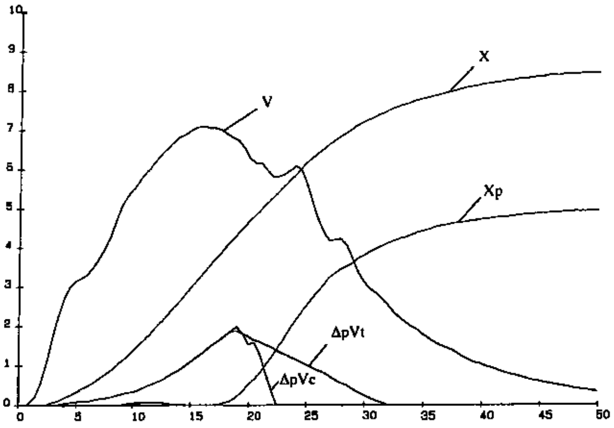

Fig. 4: **Simulation of the no-load operation of a 145 kV / 40 kA / -40 deg C circuit breaker**
X: Displacement of the moving part
Xp: Displacement of the moving piston
V: Speed of the moving part
ΔpVt: Overpressure in the thermal volume
ΔpVc: Overpressure in the compression volume

3.2 Combined calculation of the gas flow and of the electric field

Interruption of capacitive currents, from no-load lines, no-load cables or capacitor banks is one of the the essential functions that a high voltage circuit breaker has to fulfill frequently and without generating overvoltages in the network, i. e. without restriking. In order to guarantee a safe and restrike-free interruption of the capacitive currents, we have to make sure that after the extinction of the arc the voltage withstand between the contacts is always higher than the recovery voltage of the grid. As indicated in paragraph 2, the future IEC 56 standards for high voltage circuit breakers will require in certain cases an increased performance for capacitive switching. It is therefore of importance for the designers to master this type of interruption well and especially to be able to calculate the voltage withstand for a design geometry and operating condition given.

The voltage withstand between contacts is a function of local electric field E and the local gas density, which in turn is proportional to the number of particles N by unit of volume. It can be characterized by the reduced electric field E/N.

The software MC3, which has been developed jointly with the Polytechnic University of Montreal, permits the simultaneous calculation of the density field and of the electric field E and thus of the ratio E/N during an opening. The researched value can be obtained at any point of the interruption zone and at every instant of the transient recovery voltage (figure 5). The dynamic calculation takes into account the displacement of the moving parts.

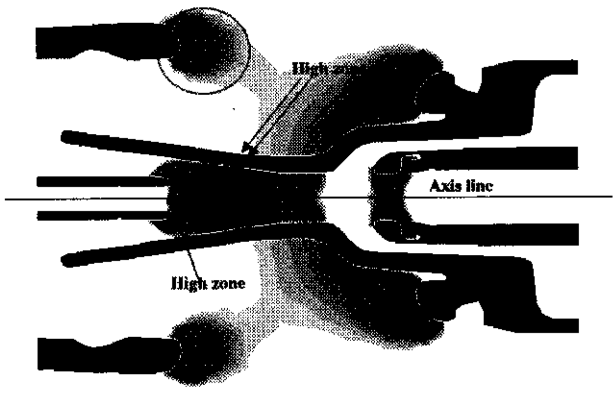

Fig. 5: Calculation of the reduced gradient (E/N) in the interrupting zone of a high voltage circuit breaker (high E/N values in the dark zones)

With the known admissible maximum value of E/N, obtained, e.g., from a series of tests on an apparatus, it is possible to calculate the voltage withstand of other devices or of the same under different interruption conditions (different grid frequency ...).

3.3 Simulation of the interruption of fault currents

The interruption of terminal fault or short-line fault currents essentially depends on the intensity of the quenching of the arc at the moment of passage of the current zero, which can be characterized by the overpressure in the expansion volume and the massflow of the gas. These parameters are simultaneously dependent on the movement of the moving parts and on the thermal expansion of the gas contained in the expansion volume. The simulation of an interrupting test therefore necessitates the simultaneous simulation of the dynamic behaviour of the interrupter and of the arc quenching at current zero.

The programme developed by GEC ALSTHOM LTD enables the complete simulation of an interrupting test. It is applicable for single pole or three-pole driven apparatus operated by a spring operating mechanism [6].

In order to simulate the thermal phase of the interruption, a "black box" model parametrized in function of the pressure and of the current is incorporated in the programme. This permits the calculation of the evolution of the resistance (or conductance) of the arc. The programme is thus capable of predetermining the arcing-time window of a circuit breaker for a given fault current, whereby the conditions of the transient recovery voltage are given or calculated on the basis of the characteristics of the grid (assigned voltage, line wave impedance, percentage of line fault current, etc.) and of the characteristics of the interrupter (additional capacitor).

The programme is applicable for designing the interruption of high short-line fault currents (test duty SLF 90) and of terminal faults (test-duty T100). Furthermore it enables the simulation of other terminal faults with reduced currents (test-duties T30 and T60), for which a specific interruption criterion has been defined.

Right from the stage of the preliminary design it is therefore possible to ensure, that no critical current is existing. Short-circuit test are performed on a mock-up or a prototype circuit breaker in order to verify this point.

Figure 6 illustrates a simulation of a 90 % short-line fault interruption at 63 kA - 60 Hz carried out for a 245 kV circuit breaker with an additional phase to earth capacitance equal to 12 nF.

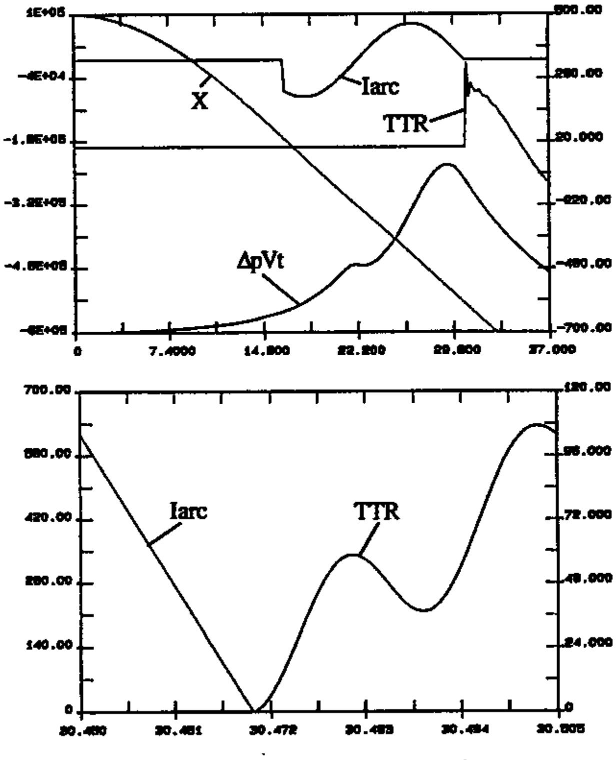

Fig. 6: Simulation of a 90 % short-line fault interruption 63 kA / 60 Hz / 245 kV

X: Contact travel
ΔpVt: Overpressure in the expansion volume
Iarc: Arc current
TTR: Transient recovery voltage

4. APPLICATIONS

The new interrupting chamber principles, which have been presented in chapter 2, have enabled the development of a new circuit breaker range extending from 72.5 kV to 550 kV covering outdoor, gas insulated and dead tank applications.

The choice of the proper interrupting technique is effected for each application taking into consideration the particular points of the technical specification, such as the specified short-circuit and capacitive switching (voltage class and factor) performance, the energy supplied by the operating drive and the search for a standardization of the interrupting elements. Thus, e.g., the rear exhaust technique was developed in order to achieve high interruption performance for capacitive switching. Over and above technical requirements, the economic aspects occupy an important position. A high degree of standardization as well as the utilization of already existing main components have a positive effect on the development time required.

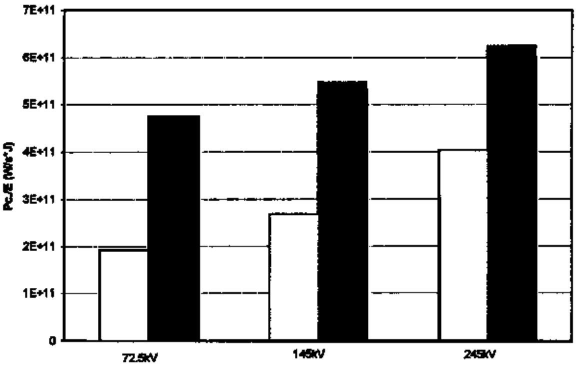

Fig. 7: **Evolution of the characteristic power in function of the trip energy**

The double volume chambers enable a reduction of the drive energy necessary for a reliable interruption behaviour. Figure 7 illustrates how the characteristic power of the interrupting chamber in function of the trip energy has increased in comparison with the conventional technology. The comparison was made with existing interrupting chambers of 72.5 kV, 145 kV and 245 kV. For the higher voltage levels, existing interrupting chambers are put in series for economic reasons. This significant increase of the interrupting performance per unit has led to the development of a generation of spring drives with a lighter design, operating in the energy range of up to 4500 J.

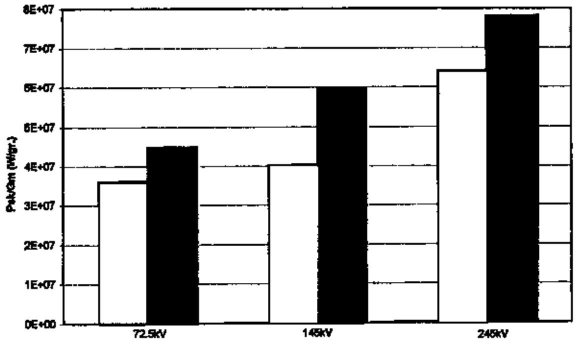

Fig. 8: **Evolution of the interrupter capability in function of the gas mass**

Furthermore an increased exploitation of the arc energy has made it possible to reduce the quantity of SF6 gas necessary for ensuring the demanded interrupting performance. For the diagram in figure 8, the quantity of gas necessary for the quenching is compared for current conventional as well as for double volume interrupting chambers in the voltage range of between 72.5 kV and 245 kV. For this, the volume (Vc) in which the cold gas is compressed and the expansion volume (Vt) in which the gas is put under pressure by the effect of the arc, was determined. The mass of SF6 gas necessary for the quenching of the arc is obtained by multiplying the total volume with the volume mass at the filling. The significant increase of the ratio between the interrupter capability and the gas mass, as can be seen from the diagram 8, enables a reduction of the total volume of the interrupting chamber housing. During the interruption process, a smaller quantity of SF6 participates in the transformation of the arc energy. Consequently a smaller quantity of pure gas is required in the interrupting chamber housing for the dielectric withstand to the transient recovery voltage. Figure 8 shows the evolution of the interrupter capability in function of the gas mass in the voltage range from 72.5 kV to 245 kV.

In this manner, massive improvements of the short-circuit performances have been possible for a given cost-effectiveness by replacing the interrupting element in already existing circuit breaker housings. Thus, for example, the interrupting performance was increased from 40 kA to 63 kA for certain dead tank circuit breakers in use today. Furthermore, the utilization of already existing circuit breaker housings for outdoor, gas insulated or dead tank applications has led to shorter development times, as a great part of the mechanical and electrical dimensioning is considerably simplified. Finally the dimensioning of new circuit breaker envelopes, the chamber volume can be reduced by up to 40 %.

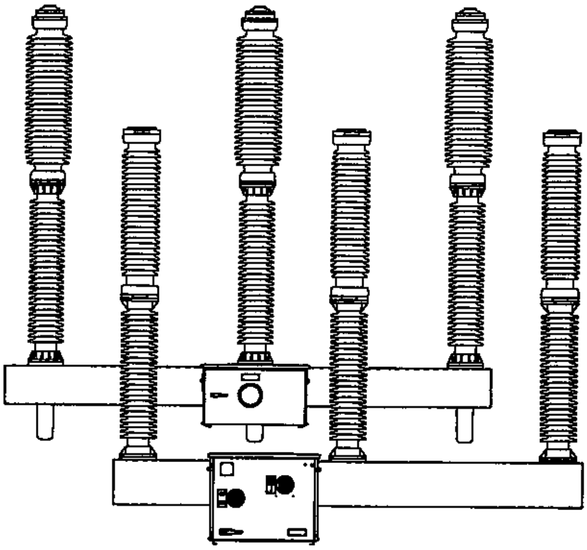

Fig. 9: **Comparison of 2 circuit breakers 145 kV / 31.5 kA / -30 deg C**

On figure 9, two outdoor circuit breakers 145 kV / 31.5 kA / -30 deg C are compared. The dimensions of the porcelain of the interrupting chamber as well as the delivered energy of the mechanical drive are reduced due to the new double volume chamber (circuit breaker in front). Vice versa, the utilization of a double volume interrupting chamber in the given more voluminous chamber porcelain (circuit breaker in back) has made it possible to improve its performance up to 145 kV / 40 kA / -40 deg C, this while maintaining the original drive and housing.

5. SPRING DRIVES

5.1 Optimization of the service lifetime of spring operating mechanisms by a more harmonic operation

The development of a new generation of circuit breakers is the occasion to optimize the device entirely based on the service experience accumulated up to then. The paper "Final report of the second international enquiry on high voltage circuit breaker failures and defects in service" (Cigre WG 13.06) [7] indicates, that on the total number of high-voltage SF6 circuit breakers in service today:

- 54.4 % of the major failures and
- 49.3 % of the minor failures

are of mechanical origin. This stimulates the designers of circuit breakers during the course of the development phase of new devices to pay particular attention to the optimization of the mechanical behaviour in service.

The significant reduction of the drive energy obtained by the utilization of modern double volume interrupting chambers supports this requirement and allows the use of new mechanical drives of a lighter construction. In the following it is demonstrated, how the selection of an appropriate design concept leads to the optimization of the dynamical behaviour of circuit breaker drives.

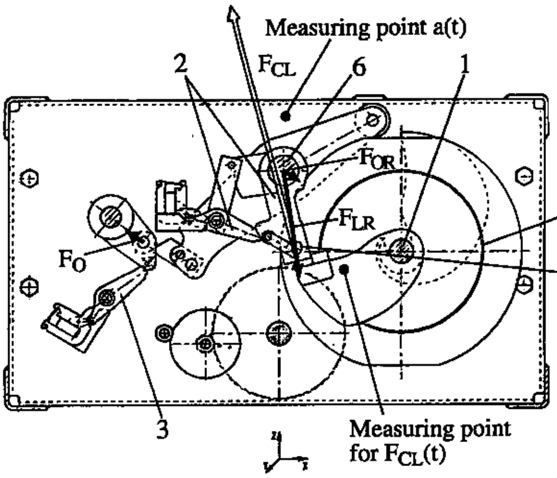

Fig. 10: Sectional view of the spring operating mechanism of the second generation: Forces when the closed position is attained.

1	Closing shaft with flywheel
2	Closing latch
3	Trip latch
4	Friction coupling
5	Shock-absorber of the closing latch
6	Main shaft
F_{CL}	Dynamic force measured on the closing latch at the end of the closing operation
F_O	Dynamic force on the trip latch resulting from the max. force F(t) measured in the coupling linkage circuit breaker - drive (Fig. 12)
F_{OR}	Reaction force to F_O
F_{LR}	Reaction force to the max. force measured in the linkage

5.2 Factors motivating the optimization of the mechanical behaviour of circuit breaker mechanisms

The mechanical drives of the second generation with spiral springs (figure 10) used until now operate with a closing shaft, which includes a relatively high inertial mass (1). During a closing operation it is accelerated by a spiral spring through 360 degrees. At the end, the moving parts are retained by the latches (2, 3) of the drive (figure 10).

The operating principle therefore leads to very substantial impacts. Most of surplus closing energy is dissipated in the friction coupling (4). The high forces released in the mechanism are compensated by an adequate dimensioning of the effected elements as well as by the utilization of shock absorbers (5).

In the course of the development of the third generation of spring operating mechanisms (figure 11), particular attention was paid to the reduction of the dynamic loads. The closing process operates in a more harmonic way and leads to lower impacts, thanks - on one hand - to a crank-type closing system with a helicoidal spring (1), which is already used on our medium voltage circuit breakers and - on the other hand - to a special cam shape (4). The technical solutions selected allow for a lighter construction and have a positive effect on the reliability and service life because of the reduction of the internal energy transformation into friction, wear and elastic and plastic deformations. Furthermore the principle selected has lead to a reduction of the number of components by around 30 %.

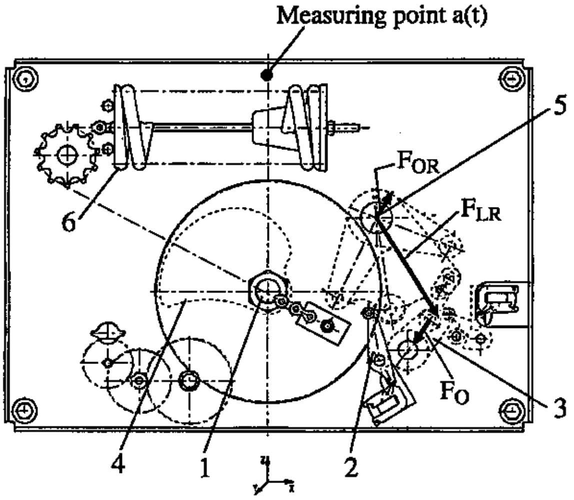

Fig. 11: Sectional view of the spring operating mechanism of the third generation: Forces when the closed position is attained.

1	Closing shaft with flywheel and crank
2	Closing latch
3	Trip latch
4	Cam
5	Main shaft
6	Closing spring
F_O	Dynamic force on the trip latch resulting from the max. force F(t) measured in the coupling linkage circuit breaker - drive (Fig. 12)
F_{OR}	Reaction force to F_O
F_{LR}	Reaction force to the max. force measured in the linkage

5.3 Analysis of the loads on the circuit breaker drives

In order to quantify the dynamic loads, which the two types of spring operating mechanisms are subjected to and to thus analyse the validity of the chosen design concepts adopted for the third generation of spring operating mechanisms, test were carried out on both types of drive. The first series of measurements was made on a 245 kV, 40 kA circuit breaker driven by a mechanism of the third generation. A second series of measurements was subsequently carried out on the same circuit breaker, this time, driven by a mechanism of the second generation.

The following values were measured on the two drives during the closing phase:

- Movement of the shaft of the circuit breaker pole s(t).
- Acceleration a(t) of the mechanism housing front plate, on the axes x (horizontal), z (vertical) and y (axial, depth)
- Force $F_L(t)$ in the coupling linkage between circuit breaker and spring operating mechanism

The trip operation was not an object of measurements, since both types of spring operating mechanism during this phase only have a latching function. The acceleration forces on the mechanism housing are primarily generated by the circuit breaker then and are of the same order of magnitude for both alternatives (approx. 300 ms^{-2}).

On figure 12 as an example the accelerations a(t) measured on the axis x over the course of the closing operation are compared. The peaks of the acceleration can be easily associated with the different movement phases of the mechanism (see figures 10 and 11). For both types of mechanism, the highest forces and accelerations occur at the end of the closing operation at the moment when the trip spring, now fully tensioned, comes to rest on the trip latch (3). In the case of the mechanism of the second generation, the drive shaft to which the flywheel (1) is coupled has completed the rotation of 360 degrees practically in the same moment. Then it comes to rest on the closing latch again and produces a much higher impact (vectors in the z-x plane, figures 10 and 11). The accelerations associated with this, despite the friction coupling with the flywheel, reach values of up to 45 g. This component of force and acceleration does not occur in the case of the spring operating mechanism type of the third generation because of the harmonic change of the spring movement direction, which the link (1) undergoes. The surplus closing energy is therefore transferred into the closing spring.

Furthermore the special geometry of the cam of that mechanism type enables the trip spring, once tensioned, to gently come to rest on the trip latch. The difference between the dynamic force and the final static force in the coupling linkage to the circuit breaker is thus reduced by half in comparison with the mechanism type of the second generation.

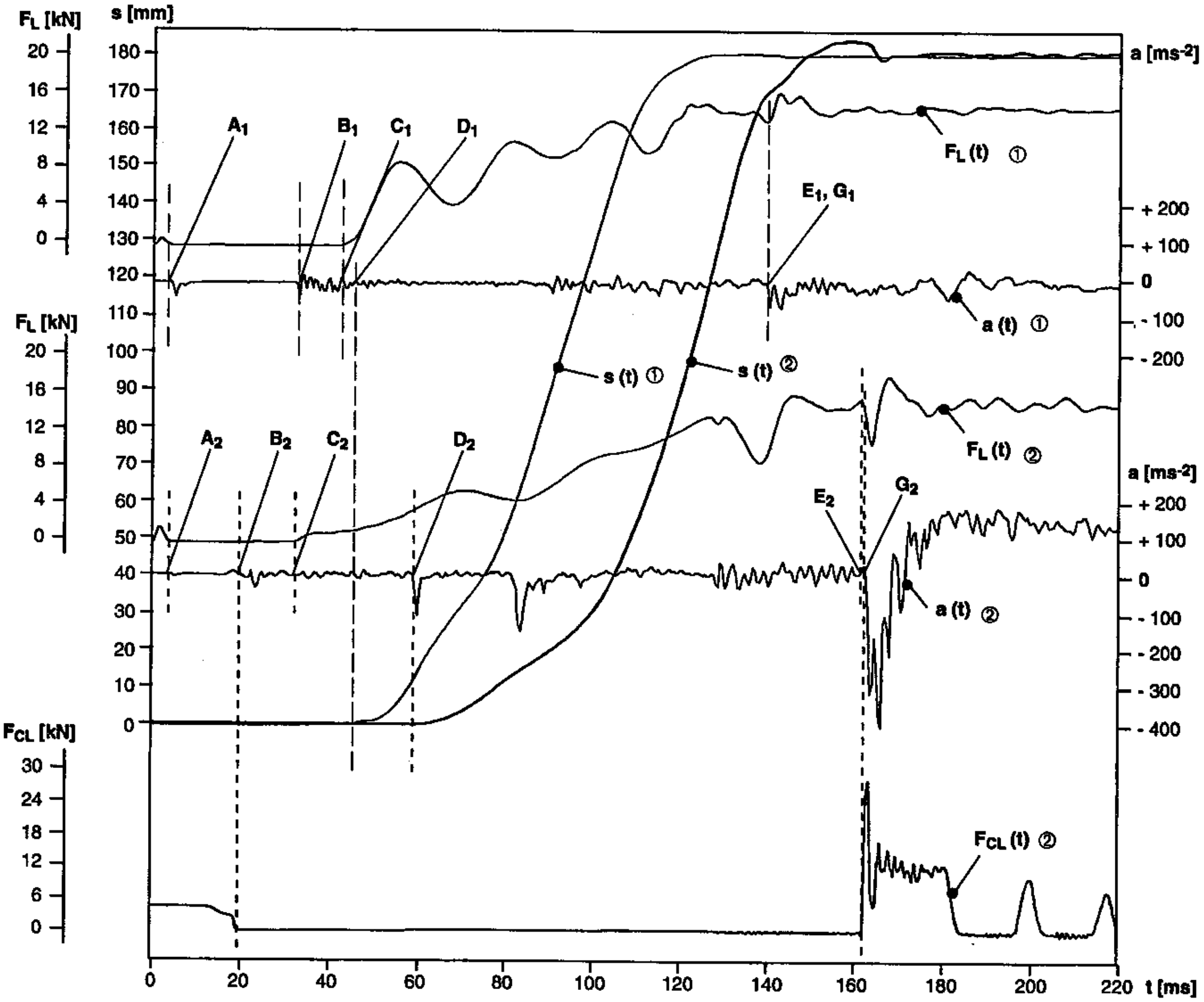

Fig. 12: Comparison of the dynamic characteristics of spring operating mechanisms of the third generation ① and the second generation ② – coupled to the 245 kV circuit breaker

A	Actuation of the closing shaft (CS)
B	Actuation of the main shaft (MS)
C	Frictional connection with the circuit breaker shaft
D	Actuation of the circuit breaker shaft
E	Decoupling CS and MS
G	Coming to rest of MS on the trip latch; only for the spiral spring drive: coming to rest of CS on the closing latch
$F_L(t)$	Force in the linkage of the coupling circuit breaker -> spring operating mechanism
$F_{CL}(t)$	Force on the main closing latch
a(t)	Acceleration measured on the mechanism housing, on the axis of the x, filtered at 500 Hz
s(t)	Movement of the pole shaft (linear potentiometer linked to the mechanism of the circuit breaker)

Table 1: Summary of the measuring results

Measured values	Spring operating mechanism type	
	①	②
Max. acceleration during closing, x $[m/s^{-2}]$	88	393
Max. acceleration during closing, y $[m/s^{-2}]$	88	334
Max. acceleration during closing, z $[m/s^{-2}]$	167	461
Dynamic force in the linkage [kN]	13...16	10.3...17.5

5.4 Analysis of the measurements

Table 1 provides a summary of the results and shows the comparison between the second mechanism generation and the solutions adopted for the third mechanism generation. The utilization of a crank-type mechanism for recovering the surplus closing energy in a harmonic manner as well as the special geometry of the cam have made it possible to significantly reduce the acceleration peaks in the interior of the system.

The speeds resulting from the accelerations are representative for the internal transformation of energy within the drive. This part of the energy is not available outside the system "operating mechanism", but is converted into friction and deformation energy and has over the long term an effect on the wear and resistance against fatigue of its components.

The smoother acceleration curve of the third mechanism generation with a helicoidal spring represents the positive influence of the chosen design on the dynamic behaviour and, in the long term, on its durability.

With the third spring operating mechanism generation a more balanced and more enduring function and thus also a more economical solution has been achieved by:

– a minimum transformation of energy within the interior of the drive,
– an optimised use of the closing energy,
– a minimum expenditure for shock absorbing devices,
– a lighter construction of the drive and thus a significant reduction of the number of components,
– a minimised wear and maintenance requirement.

6. CONCLUSION

The examples of interrupting chambers, which have been presented in this report, manifest, that the interrupting technique of SF6 circuit breakers has developed substantially over the past ten years. The progress achieved has rendered possible to define of a new generation of circuit breakers characterized by a reduced operating energy, which can be provided by low energy spring operating mechanisms.

At the same time, a new generation of spring operating mechanisms has led to reduced stresses during operation and thus to improved reliability of the circuit breakers.

These new developments make possible to comply with the future requirements of the standards (class C2 circuit breakers in accordance with IEC, with a very low probability of restrike while interrupting capacitive currents), without any increase of the operating energy of the circuit breakers.

The evolution of circuit breakers, which has been essentially presented in the range of 72.5 kV to 245 kV will be extended in the near future to the higher rated voltages and also to extra high interruption current applications (generator circuit breakers).

7. BIBLIOGRAPHIE

[1] Project IEC 56 Standard, 17A /474/CD

[2] J. Blatter; Patent EP 94109470 of 1994

[3] D. Dufournet, M.Perret; Patent FR 9211588 of 9/1992.

[4] D. Dufournet; European patent 9501121.9 of 7/1995.

[5] Ph. Robin-Jouan and others; Modelling of radiative transfers in SF6 circuit-breakers, Gas Discharges Conference Tokyo Sept. 1995.

[6] D. Dufournet; SF6 circuit breakers: Evolution from 1959 to 1994 ; Revue Générale de l'Electricité Mai 1994.

[7] CIGRE WG 13.06; Paper 13-201/94; Final report of the second international enquiry high voltage circuit breaker failures and defects in service

[8] R. Niklaus; US-Patent 5.595.287 of 21. January 1997; EP 0651409A1 of 3. November 1993

[9] R. Niklaus; US-Patent 5.541.378 of 30. July 1996; EP 0658909B1 of 13. December 1993

8. ANNEX

Utilized formulas:

Characteristic interrupting power of the chamber Pc: Power which is transformed during a 90 % SLF:

$$Pc = 0.9 \times Isc \times \sqrt{2} \times \frac{fr}{50} \times duL/dt \quad (W/s)$$

Maximum interrupting power of the chamber Psk: Power transformed during the first clearing phase of a 100 % terminal fault:

$$Psk = \frac{Ur}{\sqrt{3}} \times fpcf \times Isc \quad (W)$$

fpcf = first pole to clear factor
fr = rated frequency