C.I.P.

338 Lapua Mag.

Country of Origin: FI

TAB.	I
Date	89-09-09
Revision	06-09-14

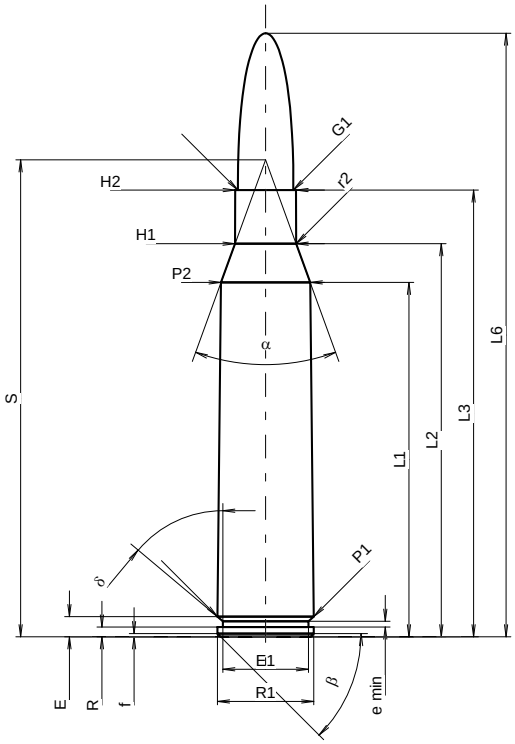

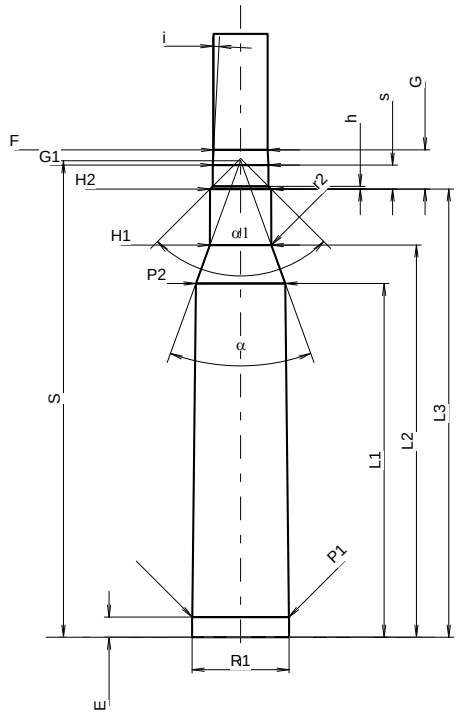

Scale 1:1.17

CARTRIDGE MAXI

Lengths

L1 1)*	=	54.90	-0.20
L2 1)*	=	60.89	-0.20
L3 1)	=	69.20	
L4	=		
L5	=		
L6	=	93.50	

Case Head

R	=	1.52
R1	=	14.93
R3	=	
E	=	3.12
E1	=	13.24
e min	=	0.90
δ	=	50°04'48"
f	=	0.50
β	=	45°

Powder Chamber

P1	=	14.91	
P2 1)*	=	13.82	-0.20

Junction Cone

α	=	39°59'48"
S	=	73.89
r1 min	=	
r2	=	2.50

Collar

H1 *	=	9.46
H2 1)	=	9.41

Projectile

G1 1)	=	8.61
G2	=	
F	=	
L3+G 1)	=	75.28

Pressures (Energies)
Method Transducer

Pmax	=	4200	bar
PK	=	4830	bar
PE	=	5250	bar
M	=	25.00	
EE	=	6600	Joule

Miscellaneous Dimensions

Fe 1)	=	0.10
delta L	=	0.05

CHAMBER MINI

Lengths

L1 *	=	54.81
L2 *	=	60.77
L3 1)	=	69.45

Breech

R	=	
R1	=	15.03
R2	=	
R3	=	
r	=	

Powder Chamber

E	=	3.12
P1 1)	=	14.96
P2 *	=	13.85

Junction Cone

α 1)	=	40°00'45"
S	=	73.83
r1 max	=	
r2	=	3.00

Collar

H1 *	=	9.51
H2 1)	=	9.45

Commencement of Rifling

G1 1)*	=	8.63
G 1)*	=	6.08
α1	=	90°
h	=	0.41
s *	=	3.70
i 1)	=	3°00'23"
w	=	

Barrel

F 1)*	=	8.38
Z 1)	=	8.58

Grooves

b	=	2.79	
N	=	6	
u	=	254.00	
Q	=	56.86	mm²

Dimensions in << mm >>
Dimensions and Tolerances for Proof Barrels
see Appendix CR 1.

Notes: 1) Check for safety reasons
* Basic dimensions