C.I.P.	10 mm FAR Country of Origin: IT	TAB. IV Date 00-09-15 Revision

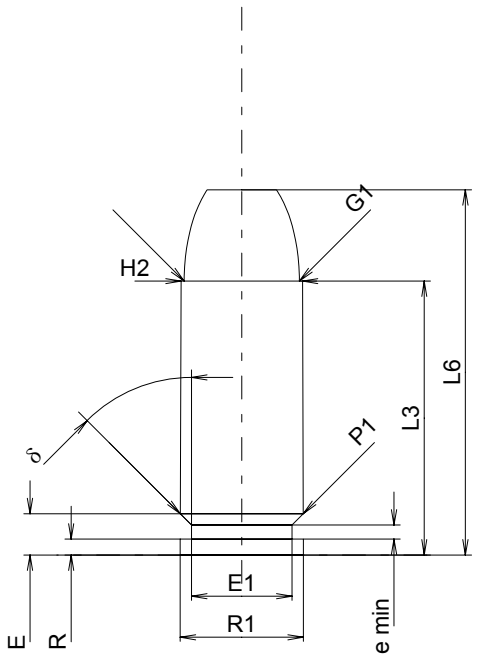

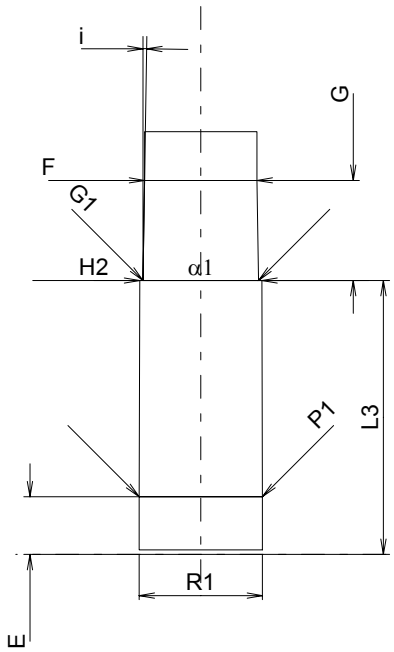

Scale 1.5:1

CARTRIDGE MAXI

Lengths

L1	=		
L2	=		
L3 1)	=	24.15	-0.25
L4	=		
L5	=		
L6	=	32.20	

Case Head

R	=	1.40
R1	=	10.85
R3	=	
E	=	3.64
E1	=	8.85
e min	=	1.25
δ	=	45°
f	=	
β	=	45°

Powder Chamber

P1	=	10.83
P2	=	

Junction Cone

α	=	
S	=	
r1 min	=	
r2	=	

Collar

H1	=	
H2 1)	=	10.70

Projectile

G1 1)	=	10.17
G2	=	
F	=	
L3+G 1)	=	32.98

Pressures (Energies)
Method Transducer

Pmax	=	2250	bar
PK	=	2590	bar
PE	=	2925	bar
M	=	12.50	

Miscellaneous Dimensions

Fe 1)	=	0.30
delta L	=	

CHAMBER MINI

Lengths

L1	=	
L2	=	
L3 1)	=	24.15

Breech

R	=	
R1	=	10.88
R2	=	
R3	=	
r	=	

Powder Chamber

E	=	5.08
P1 1)	=	10.86
P2	=	

Junction Cone

α	=	
S	=	
r1 max	=	
r2	=	

Collar

H1	=	
H2 1)	=	10.77

Commencement of Rifling

G1 1)*	=	10.19
G 1)*	=	8.83
α1	=	180°
h	=	
s	=	
i 1)	=	0°54'29"
w	=	

Barrel

F 1)*	=	9.91
Z 1)	=	10.17

Grooves

b	=	3.05	
N	=	6	
u	=	406.00	
Q	=	79.55	mm²

Dimensions in << mm >>
Dimensions and Tolerances for Proof Barrels
see Appendix CR 1.

Notes: 1) Check for safety reasons
* Basic dimensions