presented at.
Cellular Communications
International, 5-7 Nov. 1985
Online Conferences Ltd, London

A Local Cellular Radio Network (LCRN) for digital voice & data transmission at 60 GHz

Bernhard Walke
Data Processing Techniques
Dep. Electrical Engineering
Fern University Hagen, FRG

Roland Briechle
Head of Development Group
AEG Communication Techniques Div.
Ulm, FRG

System design of a LCRN is presented and a distributed organization is described to create a virtual TDM trunk carrying approx. 30Erl. of full-duplex traffic. Channel transmission rates of 16 and 64kbit/s are used for voice and data, respectively. Stations of the LCRN function as relays to extend the effective distance between transmitters and receivers to a multiple of a single line-of-sight connection. Stations may adapt their radio power dependent on the traffic needs and the transmission characteristics observed. The paper describes the transmission techniques used as well as the main protocol functions and the most important management tasks (e.g. joining/leaving the system, channel management, signalling, routing etc.).

Dr Walke received his Diploma and doctor's degree in 1965 and 1975, both from the Dept. of Elect. Eng., University of Stuttgart, FRG. From 1965 to 1983 he first served at the AEG-TELEFUNKEN Research Institute Ulm and later as dept. head in the company's Division for High Frequency Techniques where he evaluated performance and designed computer based data comms. systems. In 1983 he joined Fern University Hagen as a profesor for Data-processing Techniques. His scientific work comprises more than 30 papers.

Dr Briechle received his Diploma and doctor's degree in 1968 and 1974, respectively from the Technische Hochschule Darmstadt, FRG, Dept. of Comm. Techniques. From 1968 to 1976 he held various appointments at the Institute for HF Techniques working on RF circuits, modulation and transmission theory. Since then he has worked at AEG-TELEFUNKEN HF-Techniques Division on mobile radio mm-wave communication systems, presently serving there as head of a development group.

1. Introduction

In communications systems applications an ever increasing need is emerging to use mobile stations, being connected to each other via digital communication channels. Typically, communication becomes possible there, after a configuration phase has taken place, during which stations are positioned, get in contact with each other, thereby becoming participants of the LCRN, and becomes impossible for those stations, having moved away from the system. We restrict ourselves to stations remaining fixed to their positions during comms. and that is the reason for calling them semimobile stations. Voice and data are transmitted in that network using the synchronous time division multiplex (STDM) technique to subdivide a given band into many channels. Typically eight voice and some data terminals are connected to a station.

It is desirable that such networks are independent from any central equipment which is the reason for the stations being sufficiently well equiped to execute all the commms. and management functions needed in a completely distributed way, without the support of any central functions. One of the design goals of the system is to develop efficient management protocols to let the system also work as a mobile LCRN.

Such a system is comparable to a computer network connecting hosts to each other, but with the differences that
- there are no hosts but only voice and data terminals, being connected to the nodes of the network,
- both channel switched voice and data comms. are carried concurrently,
- no network control center exists,
- links are of varying quality and availability, requiring appropriate protocols for connection and system management,
- path lengths of links between station (nodes) are quite limited,
- a substantial portion of the total network traffic can be expected to result from the transport of overhead data needed.

In accordance to computer networks each LCRN station might serve as a relay to assist other stations as a tandem switch to complete a connection along a route, which otherwise could not be established.

The paper`s title indicates that the LCRN is cellular, which attribute is used to point out that there is some inherent property of frequency economy in the system. This, in fact, is the case, although the term cellular is somewhat misleading. What really is the case is that transmission capacity is reused, resulting in a significant reduction of the number of channels required.
The title does mention that the system will use a carrier at 60GHz, a frequency being well known to exhibit strong athmospheric attenuation. A consequence of this is that the maximum distance between any two stations is in the order of 500m, thus forming the basis for an effective channel reuse in the LCRN. The drawback of this limited path length is maked up by providing the above mentioned relay function of stations. As the system has a lot of advanced features not being implemented in any current system, it is not surprising to learn that we see a number

of yet unsolved problems, some of which are presently being solved by research people, while others require the application of know how at hand from areas like development and operation of local computer networks, using radio channels as links. Therefore a cooperation between AEG and the chair for Dataprocessing Techniques in the Department of Electrical Engineering at the Fern University has been started, in which AEG does contribute its engineering experience and research power to solve the problems related to broadband digital transmission and to develop a demonstration system, while the part of early system studies to evaluate possible system layouts will be carried out at the Fern University. The main goals of the current research work being just started there are to analyse the traffic capacity of a trunk of radio channels in the LCRN using alternate approaches, to evaluate the expected system overhead, especially the traffic resulting from the distributed network management functions, and to compute the expected reliability of radio links under realistic circumstances.

To study the influence of transmission channels with time dependent quality and the effects due to the radio channels in tandem on system capacity, a conventional local area network is used together with a simulator for the type of radio noise being characteristic for 60GHz channels. This simulator of the transmission system will be used to test and verify newly developed comms. and management protocols which will run on some prototype stations. Traffic capacity of the system will be studied using analytic and simulative queueing models for performance analysis and evaluation.

2. Radio Transmission Using mm-Waves

AEG research and development departments are just working to fullfill a contract with the PTT to demonstrate that a broadband cellular digital radio system at 900MHz (called CD900) will be the best solution to solve the mobile comms. needs of the late 80th. The transmission technique used within CD900 will be presented in detail at this symposium by SEL, which is a partner to AEG in the consortium to fulfill the contract mentioned above.
As the radio transmission techniques being considered for use in the 60GHz system, at least, will be a descendant of the techniques used with CD900, we confine ourselves here to a brief summary of its main characteristics. This summary is needed to demonstrate what effects the reuseability of channels has on the transceiver parameters of each station and its operation.

2.1 Signal Transmission

Digital radio transmission of voice and data is very attractive in terms of cost as low-cost highly integrable technology is increasingly available. At the moment this isn't yet the case for all the functions needed, but it can be foreseen that sufficiently powerful semiconductor devices delivering e.g. 1W transmitted power at 60GHz, a new generation of signal processors etc. will be available during the next five years.

It is well known that digital radio transmission has a reduced susceptibility to fading and that near optimum modulation techniques are practicable approaching a quotient of Ebit/No→1.
The physical channels for data transmission over radio links might be realized using FDM, TDM and CDM, known as frequency, time, and code division multiplexing, respectively. FDM is the classical approach in VHF /UHF mobile radio systems, allocating one RF channel per data channel, being well established but suffering from high hardware complexity and severe multipath fading. TDM has been used for quite a while in digital line-of-sight radio links. Its application for mobile use (so called "broadband digital mobile radio") is just emerging. Application of CDM for land mobile systems has been proposed and studied, mainly for military applications, but has suffered from several drawbacks. Therefore TDM - specifically STDM - has been chosen for the LCRN.
To overcome intersymbol interference, caused by spreading of the radio channel`s impulse response, a broadband transmission system requires antimultipath techniques. This type of interference, kown as selective fading, can be suppressed using spectrum spreading techniques, e.g. direct sequence or frequency hopping.

In the sequel five characteristics of the system CD900 are mentioned, which also will be considered for use in the LCRN.
Channel sounding (shot and freeze) is used to combat multipath effects, i.e. the multipath profile is measured and stored during the synchronization preamble of each time slot. A second very effective technique used is correlation detection of the signal following the preamble and a third is the addition of the energies of the strong discrete paths according to the structural information gained through the sounding signal.
Instead of a 2- a M-ary signal is used to improve frequency economy, being the fourth characteristic of CD900. Finally, all resolvable cells of the multipath profile are added by a coherent receiver, requiring to take into account the amplitude and phase of the multipath profile.
For the 60GHz application multipath delay spread might turn out to be too small to be taken advantage of; then space diversity will be used.

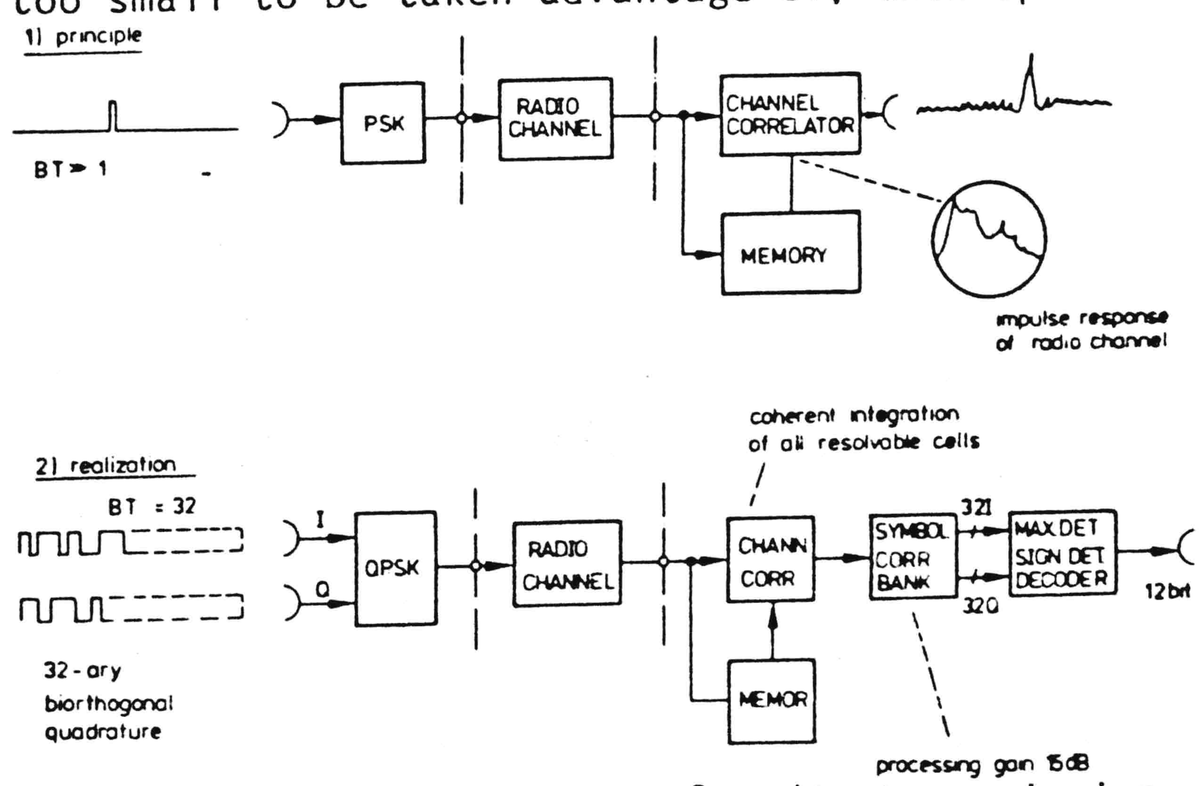

Fig. 1: Functional diagram of radio transmission

Fig. 1 shows a functional diagram of the radio transmission in its principal functioning, using PSK modulation and a correlation receiver. The lower part of the figure shows the realization for CD900 using a 32-ary biorthogonal quadrature signal to transmit 12bit of information for each sequence of 32chip on both the I- and Q-channel.

2.2 The STDM-Frame for Information Transmission

All stations of the network will be kept in synchronism which should not be a problem for a local network. The transmission rate of a channel will be a multiple of 16kbit/s, so that recommendation EUROCOM D/1 and CCITT G.700 series can be met. One main design goal is to keep the system compatible with existing wide area networks for voice and data transmission, especially the forthcoming ISDN.
Radio transmission using time multiplexing requires somewhat different parameter settings for the frame and slot structures compared to cable bound networks. The reasons for that are

- the overhead per time slot required with radio channels to synchronize the receiver, keep the slots separable, and transmit some channel related information,
- and a performance requirement which aims at minimizing the percentage of a time slot being devoted to overhead.

Although this requirement would result in at least very large (if not infinite) slot lengths, another condition derived from upper bounds for interactive voice transmission using tandem links does limit the slot length to at most some ms. Fig. 2 presents the structure of the frame used and its slots. A frame is 10ms in length and carries 20 full-duplex channels, each with 16kbit/s. Each time slot consists of a separation interval partly being useful to carry a preamble, and an information part of 162bit being coded into 864chip. It is worth noting that each station will be able to multiplex slow data streams on a 16kbit/s channel, that data channels might also be used half duplex, and that the stations will offer interfaces to be used both for circuit and packet switched data.

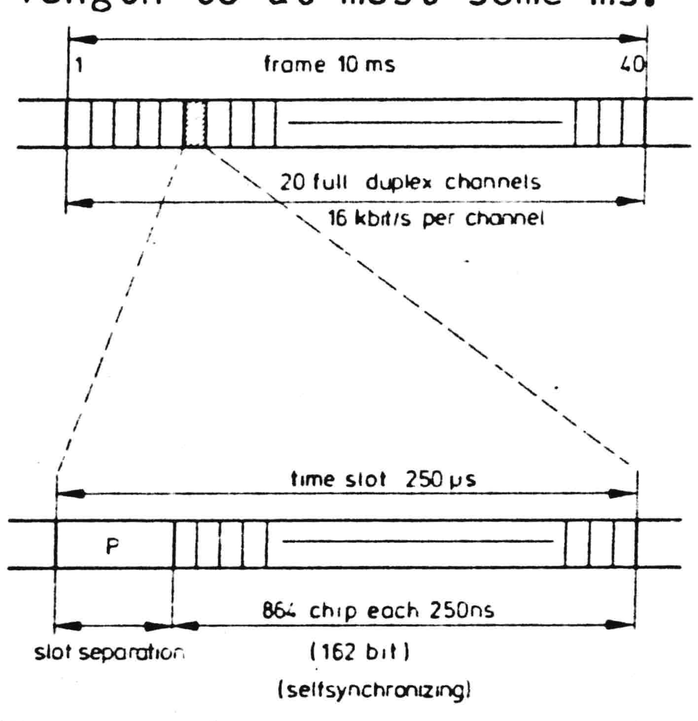

Fig. 2: Structure of the STDM frame

Some of the slots will be used to form multiple access (S-ALOHA) channels to carry system management and signaling datagrams. All other channels form a common pool which can be assigned unlimitedly on demand.

2.3 Performance of the Transmission System

The system considered cannot be assumed to operate exclusively with line-of-sight connections between stations, so that spread spectrum (SS) techniques and/or diversity are required to control multipath interference and to improve transmission performance. Table 1 shows the transmitter (TX) and receiver (RX) specifications, without the use of SS-techniques. These values would be sufficient for a maximum path length of 500m at 60GHz, consuming 122dB and 8dB, respectively, for

free space and atmospheric attenuation, and leaving 8dB spare as the system margin to overcome fading and shadowing breaks.
A total of 64 duplex channels has been estimated to carry the traffic for a typical LCRN with 20 stations.

RF frequency	60GHz	IF margin required	9dB
TX RF power 1W	30dBm	(FSK, BER=10exp-4)	
antenna gain TX	10dB	fading margin	
antenna gain RX	10dB	plus	
noise figure	12dB	shadowing attenuation	8dB
IF bandwidth	65dBHz(3MHz)		
(64 dx.chann.	16kbit/s)		

Table 1: TX/RX specification: system value is 138dB.

As a system margin of 8dB is not sufficient, coding and the spreading technique shown in Fig.1 are used, resulting in a processing gain of app. 7dB compared to FSK modulation, cf. table 1. 2PSK will be used rather than QPSK, however, for its greater ruggedness, since bandwidth reduction is not as much important at mm-waves as is the case at UHF. (The total processing gain is the same for both types of modulation).

Two more factors are expected to contribute to an enhancement of the system value, namely
- fan beam antennas (10dgr. elevation, 30dgr. azimuth) with a gain of 13 to 16dB per station,
- reuse of channels in the LCRN (called the cellular effect), whereby the number of duplex channels required to carry the expected traffic can be lowered by approx. a factor of 3, which contributes another 5dB to the system value.

The two just named factors each require careful considerations to make sure that the expected advantages can be realized, which is part of the work for further studies.

3. System Characteristics

As there is no central function in the LCRN, the well known problem of an efficient distributed organization, consuming as small as possible capacity of station`s processing power and of the trunk`s comms. channels, is to be solved. Therefore a number of alternatives have been developed to discuss the pros and cons of all those organizational functions which, altogether, can be expected to generate the main processing and comms. load of the system. Ideally, one would require the total overhead to consume only a small percentage of the system`s capacity. All our research and development activities under way aim at reaching that goal. The following list does name the most frequent and therefore the most urgently to be optimized activities consuming overhead in the LCRN.

- Management of the station`s fan beam antenna,
- establishing connections between subscribers of different stations including routing, reliability support, flow control, etc.
- stations joining and leaving the LCRN,
- updating station-local network-related information,
- operation control and reconfiguration management.

Apparently, a lot of knowledge at hand available from local and wide area networks for voice and computer comms. can be utilized, but a lot of LCRN-specific problems remain, some of which we are going to present now.

3.1 Management of a Station`s Fan Beam Antenna

A transmission channel in the LCRN is defined through a time slot, having a fixed position in the frame and being periodically available according to the given frequency (100Hz) of the frame. As a slot does carry 162bit of information data (voice is taken as data, too), a station is forced to collect all outgoing data of a channel into a buffer, form 162bit-blocks and transmit such a block according to the FIFO rule every 10ms. The same process, but in the opposite order, is required for incoming data.
When fan beam TX/RX antennas are used, apparently, an organization is needed to switch the station`s beams synchronously with the slot cycle (.25ms) into the actual direction to serve transmission of the related connection. This function can be demonstrated by the example of Fig. 3.

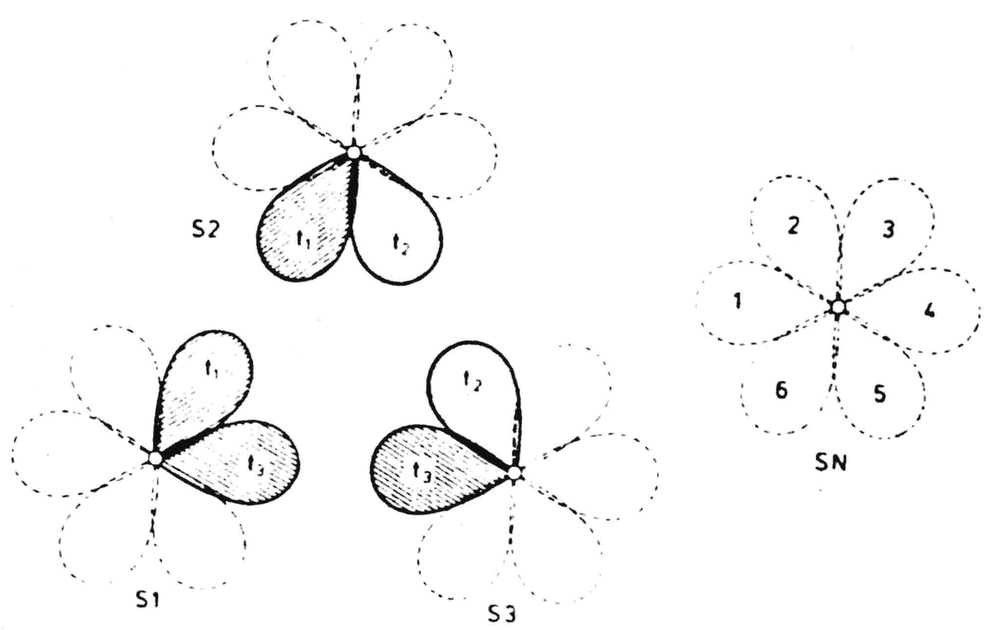

Fig. 3: Example of station`s fan beam management

It is presumed there that the stations S1,S2, and S3 are fully meshed, being able to communicate pairwise via line-of-sight links. Station SN is not part of the LCRN at the moment. If we assume that stations use halfduplex channels, then their fan beams must follow the slot cycle and be directed as indicated in the following table.

station	time t1	t2	t3
S1		x	x
S2	x	x	
S3		x	x

Such functioning does presume that stations are able to determine the position of all neighbouring stations according to the point of compass. Although it would be sufficient for the purpose under discussion, to have a maximum RX energy detector internal to the station and to distinguish neighbouring stations by their angles relative to each other, the orientation by means of the compass is required to route forward connections during their establishment phase.

3.2 Establishment of a Connection

Three cases are to be considered:
1) both subscribers are connected to the same station,
2) two neighbouring stations, connected by a direct link, are involved,
3) the support of one or more relay stations is needed for connection establishment.

A connection is a prerequisite for any kind of comms. In the case of circuit switched voice or data, connections run between two subscribers. In the case of packet switched data connections, a packet switching network between stations is used to transport packets or datagrams along virtual connections or without its use, respectively.

A station being asked by its subsciber to establish a connection to a remote subscriber does use only its local information to decide, which of the neighbouring stations should be adressed to function as a connection endpoint or as a relay to switch forward the connection. The path length of a connection depends heavily on the actuality of a station`s local information. Arrivals and departures of stations to/from the LCRN, breakdowns of routes, location changes of subscribers etc. are some possible reasons to make a periodical update of a station`s network related data a must. The most frequent changes can be expected to happen to the quality and availability of a station`s incoming/outgoing links from/to its neighbours, which quite easily can be followed by their continous observation. Time parameters of all other types of information are much less critical, so that the frequency of local information updates can be kept sufficiently small.

A completely distributed routing algorithm will be used leaving the decision, how at best to route forward a connection or datagram, to each station. As we expect some connections to be very unreliable, but with breakdowns only for small time intervals, we think about preparing the LCRN always to be able to provide alternate paths, which possibly can be done with the use of a common network of backup links, offering a sufficient heavy meshing. This reliability support will be offered load dependent, so that we expect to offer highly reliable links under normal operation and a somewhat reduced reliability under heavy load. Please note that heavy load might be avoided in any situation by use of subscriber priorities, combined with a flow control procedure, which is able to close the system to low priority users. Flow control procedures also can be used to support a balanced load of the stations.

Signaling traffic, e.g. to establish connections, is bursty in nature. Therefore a packet network is provided, using the S-ALOHA protocol, to carry the related data. This network is used also to carry the network management traffic. At the moment we study, what capacity this network should have and what realtime traffic can be carried, dependent on the number of slots, devoted to the net.

3.3 Arrivals to and Departures from the LCRN

Some of the stations capacity is needed to keep the network open for arriving stations and to react to announcements of stations wanting to depart. In Fig. 3 one may assume that station SN is newly arriving and that station S3 is the most adjacent. An algorithm must be developed which on one hand does not waste the capacity of station S3 in its trials to get in contact with a possibly newly arrived station. On the other hand some upper bound should be guaranteed for the time interval between a new station arriving and a LCRN-station recognizing it and welcoming it to join the LCRN. The process defining the length of this interval must carefully be optimized, because it also will be used to reintegrate any station, occasionally having lost contact to the LCRN. As we think about developing protocols also being useable for a fully mobile system, a substantial portion of the station`s processing power might be devoted to its activities to keep contact to other stations. Some related thougths can be found in [1].

3.4 Updating of local information and network management

The actuality of local information can be expected to be the better the more recent it is. On the other hand the network traffic resulting from updating local files of stations must be limited. Therefore we think of implementing functions in the stations that could be used to gain network related information by passively observing what happens around. For example, the status of the bundle`s channels can be followed by continuously tracking the occupancy of the frame`s slots. As we aim at a heavy reuse of channels appearing free to a station, although being used elsewhere in the LCRN, it is apparent that a station`s subjective impression about a channel`s status just would be the best basis for a reuse decision. The private guess about a channel`s status is verified during connection establishment through the station being addressed. A channel is defined as free, if two stations decide it to be so.

Another passive method to update a station`s local information file is to follow the information flow of the packet network, having been mentioned already. The links of that net are used point-to-point between stations to carry connection oriented signaling and other management data and therefore just carry the information needed for local updates by other stations being able to follow.
There is also some active exchange of management data, e.g. to inform other stations about a station`s own view of the LCRN. Such exchange periodically would be desirable to complete the local view and is required to keep the list of subscribers and stations actually being connected to the net.

4. Performance Studies of the LCRN

Two main questions have to be answered, namely,
1) what amount of subscriber generated traffic can be carried reusing

a given number of channels as much as possible and what percentage of the total traffic will be for management purposes.

2) what internal processing power in a station will be required to perform all the functions (partly in real-time).

The answer to question 2) will be an outcome of the design process, but whatever might be the requirement, we feel that the availability of sufficient processing power will not be a serious limitation, because VLSI technique soon will offer cost effective solutions. What we have to consider is that the complexity of the station`s software has to be kept sufficiently small, otherwise it might become too expensive to be realized and updated through the lifecycle.

The answer to question 1) is not known today but work is in progress to get some more insight there. Fig. 4 presents the typical structure of a cellular radio network using hexagons with fixed stations in the cell`s centres. Around any cell (e.g. cell A) a circle of hexagons exists where this cell`s channels might not be used. A reuse of cell A`s channel(s) is permitted to non adjacent cells, e.g. to cells B and C.

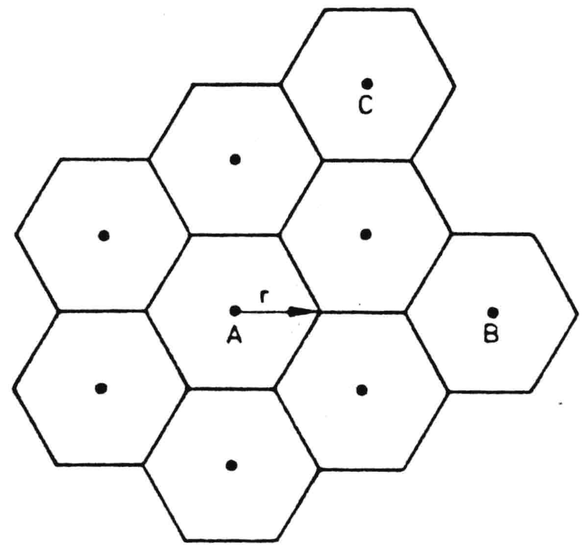

Fig. 4: Typical structure of a cellular radio network.

In the LCRN such a cell structure does not exist. Instead of this the LCRN does cover an area where some stations are located nearby while others are far distant, just as occasion may happen. Fig. 5 shows a possible structure of the LCRN where stations si (i=1,2..9), as shown by the connection graph in the lower part of the figure, occasionally have no meshing with each other. The circles around each station (radius r) limit the path lengths of each station`s transmitters. If one assumes omnidirectional transmitters/receivers, a reuse of time slots (channels) in the configuration assumed is quite limited: Stations S1, S5, and S7 each may use channel T1, stations S2 and S9 both may use channel T2. The other stations each must use their own channel exclusively.

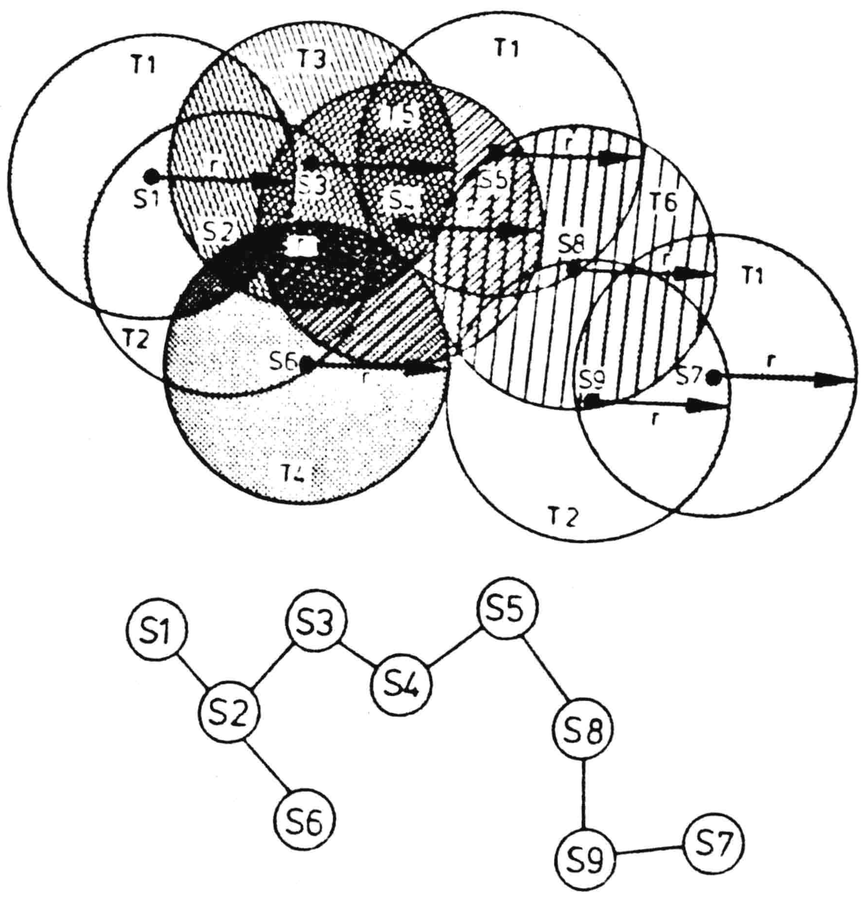

Fig. 5: Example of the LCRN

The situation becomes much better in terms of frequency economy when fan beam antennas are use instead of omnidirectional antennas. Then, even within the radius r of a station`s beam the same channel, say t1, used with beam N "North", might be reused by other stations to communicate, e.g. via beam SW "South West", cf. Fig. 6. Such reuse presumes the stations not only to be able to follow the channel usage over time but also to distinguish, for which beams a channel might be used or not. Instead of 6 channels with omnidirectional antennas, cf. Fig. 5, only three channels are needed to serve the same configuration of stations, cf. Fig. 7.

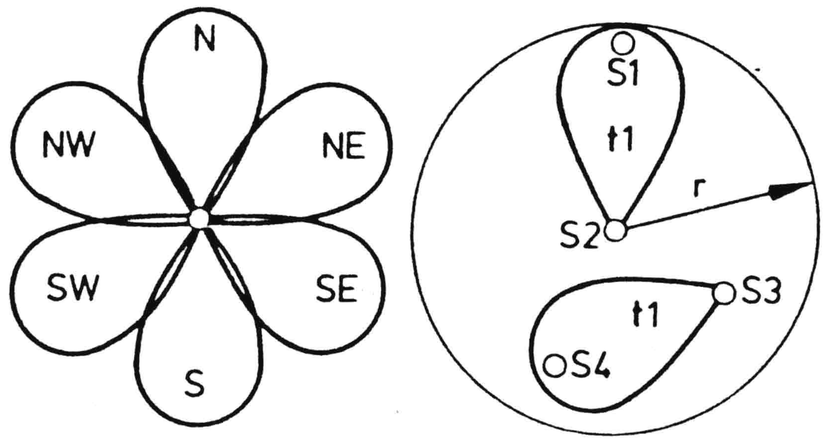

Fig. 6: Reuse of slot t1 within radius r of S2

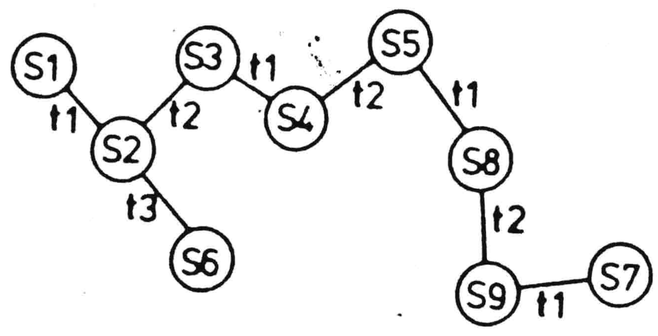

Fig. 7: Example of slot useage with fan beam antennas for the links of Fig.5

We have found some published results applicable to answer the first part of question #1) in that the throughput of a multi-hop S-ALOHA channel is computed there assuming different configurations of the stations [2]. Although these results only cover a small portion of this question, some deep insight into the problems to be solved during performance analysis of the system can be gained. One important outcome is that the throughput of a S-ALOHA channel tends to decrease heavily compared to a single-hop useage.
Another relevant paper is devoted to the evaluation of demand assigned multiple-access systems using ALOHA channels for signaling and a bundle of channels for transmission of subscriber traffic, see [3] and the papers cited there. The models considered are quite simple, compared to those required to analyze the capacity of the LCRN.
Finally, it should be mentioned that we are just configuring some hardware where some protocol functions of the LCRN will be implemented. A local area network offering STDM links and some minicomputers are combined to simulate a real system. The transmission characteristics of the radio channel are simulated and superimposed to the LAN`s links.

[1] S.M. Sussman: A survivable network of ground relays for tactical data communications. IEEE Trans. Comms. Vol.COM-28, No.9, Sept.1980, pp.1616-1624.

[2] J.A. Silvester, L. Kleinrock: On the capacity of multihop slotted ALOHA networks with regular structure. IEEE Trans.Comms. Vol. COM-31, No.8, August 1983, pp.974-982.

[3] S.S. Rappaport: Demand-assigned multiple-access systems using collision type request channels: traffic capacity comparisons. IEEE Trans.Comms., Vol.COM-27, No.9, Sept. 1979, pp. 1325-1331.