C.I.P.	7 x 57 Country of Origin: DE	TAB.	I
		Date	84-06-14
		Revision	02-05-15

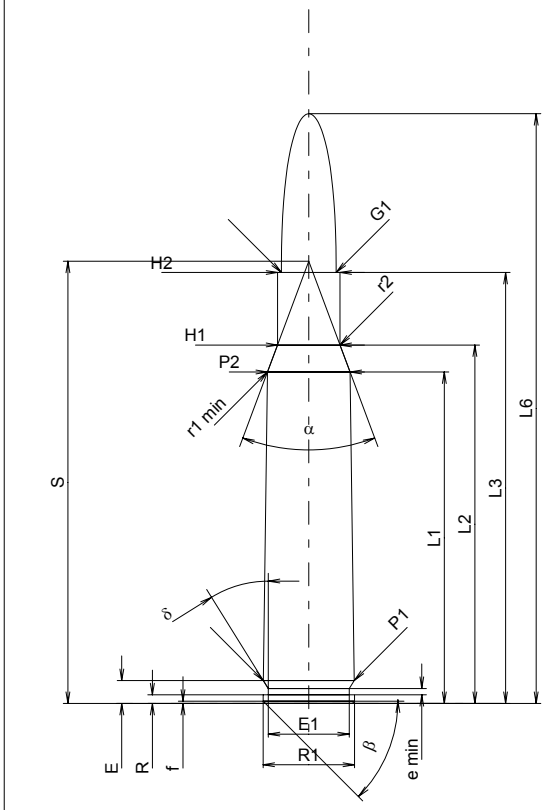

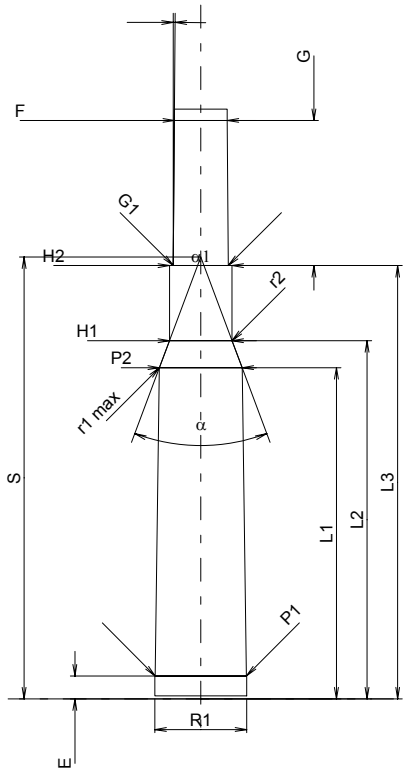

Scale 1:1

CARTRIDGE MAXI

Lengths

L1 1)*	=	43.84	-0.20
L2 1)*	=	47.41	-0.20
L3 1)	=	57.00	
L4	=		
L5	=		
L6	=	78.00	

Case Head

R	=	1.15
R1	=	12.10
R3	=	
E	=	3.04
E1	=	10.70
e min	=	0.84
δ	=	32°
f	=	0.30
β	=	45°

Powder Chamber

P1	=	12.01	
P2 1)*	=	10.92	-0.20

Junction Cone

α	=	40°54'05"
S	=	58.48
r1 min	=	0.50
r2	=	0.50

Collar

H1 *	=	8.25
H2 1)	=	8.25

Projectile

G1 1)	=	7.25
G2	=	
F	=	
L3+G 1)	=	76.20

Pressures (Energies)
Method Transducer

Pmax	=	3900	bar
PK	=	4485	bar
PE	=	4875	bar
M	=	25.00	
EE	=	3450	Joule

Miscellaneous Dimensions

Fe 1)	=	0.10
delta L	=	

CHAMBER MINI

Lengths

L1 *	=	43.80
L2 *	=	47.37
L3 1)	=	57.30

Breech

R	=	1.15
R1	=	12.15
R2	=	
R3	=	
r	=	

Powder Chamber

E	=	3.04
P1 1)	=	12.04
P2 *	=	10.95

Junction Cone

α 1)	=	41°00'21"
S	=	58.44
r1 max	=	0.50
r2	=	0.50

Collar

H1 *	=	8.28
H2 1)	=	8.27

Commencement of Rifling

G1 1)*	=	7.30
G 1)*	=	19.20
α1	=	180°
h	=	
s	=	
i 1)	=	0°28'39"
w	=	

Barrel

F 1)*	=	6.98
Z 1)	=	7.24

Grooves

b	=	3.90	
N	=	4	
u	=	220.00	
Q	=	40.41	mm²

Dimensions in << mm >>
Dimensions and Tolerances for Proof Barrels
see Appendix CR 1.

Notes: 1) Check for safety reasons
* Basic dimensions