OD-1(QuadOP)

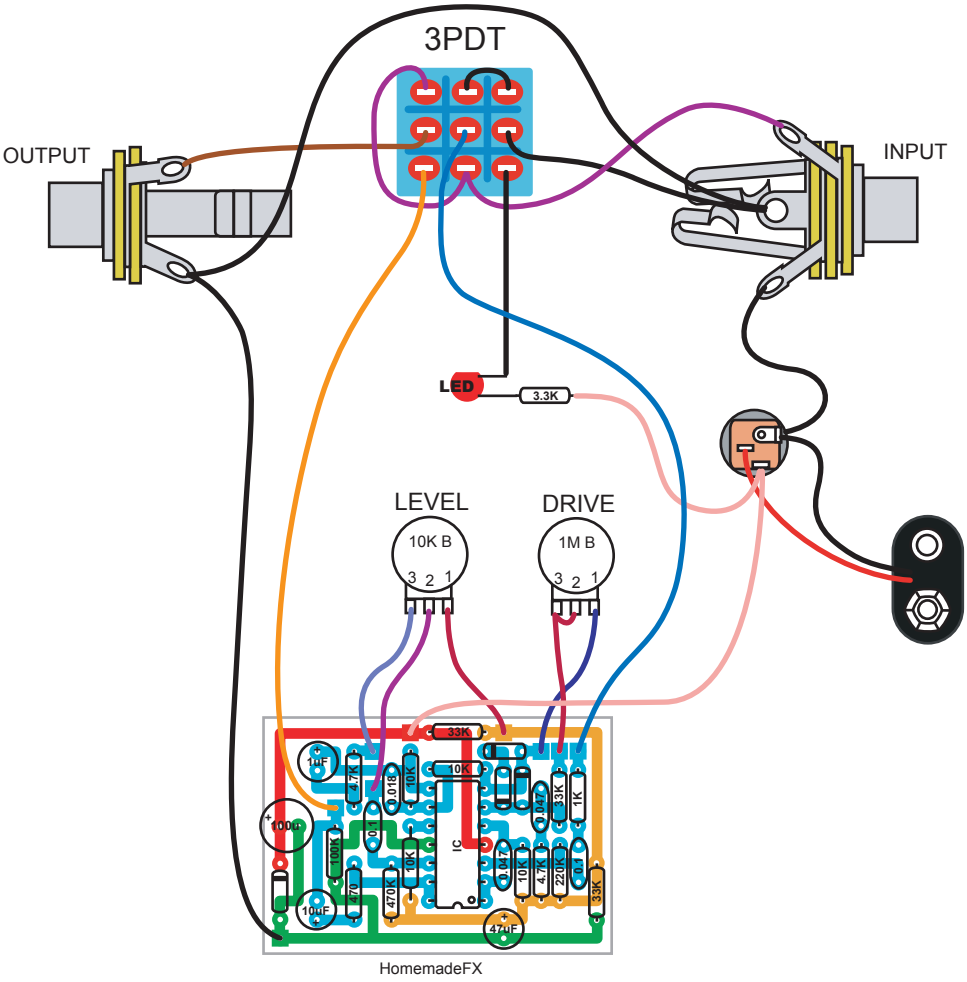
3PDT
OUTPUT
INPUT
LED
3.3K
LEVEL
10K B
3 2 1
DRIVE
1M B
3 2 1
33K
10K
1uF
4.7K
0.018
10K
100uF
100K
0.1
10K
470
470K
10uF
IC
0.047
33K
1K
0.047
10K
4.7K
220K
0.1
33K
47uF
HomemadeFX