Indian Journals of Science and Technology, *Vol 9(21), DOI: 10.17485/ijst/2016/v9i21/94813, June 2016*
ISSN (Print) : 0974-6846
ISSN (Online) : 0974-5645

Jib System Control of Industrial Robotic Three Degree of Freedom Crane using a Hybrid Controller

Muhammad Hamid*, Mohsin Jamil, Syed Omer Gilani, Shahid Ikramullah, Muhammad Nasir Khan, Mazhar Hussain Malik and Ishtiaq Ahmad

School of Mechanical and Manufacturing Engineering (SMME), National University of Sciences and Technology (NUST), H-12 Main Campus, Islamabad, Pakistan;
muhammadhamid873@gmail.com, mohsin@smme.nust.edu.pk, omer@smme.nust.edu.pk; drshahid@smme.nust.edu.pk, dr.nasirkhan@ucp.edu.pk, mazhar.hussain@isp.edu.pk, ishtiaq.ahmad@ee.uol.edu.pk

Abstract

Background/Objectives: Cranes are used to carry loads effectively. During movement, often undesired fluctuations of lifted payload occur, which needs to be controlled. Control is the basic requirement for desired operation of crane. Objective is to control the trolley position and swing angle of payload. **Methods/Statistical Analysis**: The continual flow requires an effective control methodology to achieve a high positioning control of the trolley carrying payload and suppression of swing angle of payload during operation. Optimal control techniques can be used to control these undesired vibrations. These techniques result in some undesired overshoot and undershoot causing the payload to swing prior to system getting stable. However if these techniques are combined with intelligent control techniques then a more stable system can be obtained. **Findings:** In this paper a hybrid controller called neuro-optimal controller has been used to control the swing angle of lifted payload by controlling the trolley position.The proposed technique of using a hybrid controller has stabilized the system by reducing the overshoot, undershoot and settling time. **Application/Improvements:** The proposed technique is very useful in many industrial applications. Experimental analysis can further provide the insight and limitations of the proposed techniques.

Keywords: Artificial Neural Network (ANN), Algebraic Riccati Equation (ARE), Back Propagation (BP), Linear Quadratic Regulator Controller (LQR), Neural Network Predictive Controller (NNPC), 3 Degree of Freedom (3DOF)

1. Introduction

A large, tall machine (depending on the required output) utilized for moving, lifting or lowering heavy material or payload by suspending them from arm or beam having different types of wire ropes and sheaves and to move it linearly[1]. Undesired fluctuations in terms of swing and trolley motion of lifted payload occur during this process. One way of countering these undesired motions is optimal control. The Proportional–Integral–Derivative (PID) gains can be calculated through Linear Quadratic Regulator (LQR) controller to achieve required output. Performances factors are settling time overshoot and undershoot[2–5]. Command shaping technique shows more effectiveness than the outmoded input phasing for decline in vibration[6]. The classical PID controller cannot endure the online discrepancies of the system due to instabilities and noises. The Artificial Neural Network (ANN) has the value and proficiency of adjusting PID gains even online[7]. These precincts can be addressed if the tuning of PID controller is done through innumerable intelligent methods. The intelligent procedures accomplish best performance in terms of settling time, overshoot and undershoot as related to conventional PID tuning methods[8]. These methods include fuzzy logic, ANN, Adaptive Neuro Fuzzy Interference System (ANFIS) and Genetic Algorithm (GA)[9]. The sliding surface control

*Author for correspondence

along with Lyapunov function can be used to perceive the behavior of plant that is continuously varying its initial conditions[10]. The non-linear coupling law can also be followed for continuous tracking of the trolley position and swing angle[11]. The two main complications occur when Back Propagation (BP) based neural network and PID control technology are simultaneously used i.e., slow junction of the process and the system has the tendency to fall into the local minimum easily. If we use conventional PID controller and neural network in the same controller, the neural network will alter the factors of the classical PID controller through regulating the coefficient of weights and self learning algorithm by following the optimal control law[12–14].

Moreover in our suggested system, a hybrid combination of both LQR a conventional technique and ANN an intelligent technique has been combined. Thus a hybrid controller, neuro-optimal controller has been used to tune PID gains for controlling the swing angle of lifted payload. The Quanser 3 DOF crane studied for this technique mainly consists of three subsystem tower, payload and jib. Our main focus will be on controlling the jib system which itself consists of trolley position and swing angle of payload.

2. System Modeling

The Stand-in Quanser 3 Degree of Freedom (DOF) crane model's researched examination precisely duplicates the working of the actual 3DOF industrial crane. Momentary evidence is given here to comprehend the dynamics of 3DOF crane; however detailed information can be seen in user manual of Quanser 3DOF crane[15].

Three major parts of the crane mainly comprises of three sub systems which are tower, jib and trolley carrying the payload. Obviously there are three detached controllers installed in the model crane for tower, jib and payload. The tower being the vertical member and horizontal member is called jib. A trolley with steel cables constitutes the jib to lift the payload or drop it through winding and unwinding of the cable. Movement of Jib is either in clockwise or anticlockwise rotation and its maximum rotation is 360 degree however the trolley can move linearly on the jib or boom axis. The motion of the payload along jib axis exactly duplicates the motion of inverting pendulum and steel cable is assumed to be rigid. The motion of the payload is shown in Figure 1. The system is nonlinear and nonlinear dynamics can be found using Lagrange method. The equations of the found nonlinear system are then linearized and signified in state-space. Linear representation of the state-space of the 3DOF crane jib system is shown below when ignoring the rotational kinetic energy of the pendulum:

$$\frac{\partial}{\partial t}x = A\,x + B\,u \tag{1}$$

$$y = C\,x + D\,u \tag{2}$$

Where system states are given below:-

$$x_i^T = [x_i(\mathrm{t}), \gamma(\mathrm{t}), \frac{d}{dt}x_i(\mathrm{t}), \frac{d}{dt}\gamma(\mathrm{t})] \tag{3}$$

Where $x_i(\mathrm{t})$ is the position of trolley along jib axis, γ (t) is swing angle of payload, $\frac{d}{dt}x_i(\mathrm{t})$ is the change in trolley position means velocity of trolley and is $\frac{d}{dt}\gamma(\mathrm{t})$ rate of swing angle along jib axis. Jib system matrices are given below:-

\ (4)

$$B_{crane} = \begin{bmatrix} 0 \\ 0 \\ \dfrac{r_{j-pulley}^2 \eta_{g-j} K_{g-j} \eta_{\mathrm{m}-j} K_{\mathrm{t}-j}}{m_{trolley} r_{j-pulley}^2 + J_{E-\psi} K_{g-j}^2} \\ \dfrac{r_{j-pulley}^2 \eta_{g-j} K_{g-j} \eta_{\mathrm{m}-j} K_{\mathrm{t}-j}}{(m_{trolley} r_{j-pulley}^2 + J_{E-\psi} K_{g-j}^2) l_{\mathrm{p}}} \end{bmatrix} \tag{5}$$

$$C_{crane} = \begin{bmatrix} 1 & 0 & 0 & 0 \\ 0 & 1 & 0 & 0 \end{bmatrix} \tag{6}$$

$$D_{crane} = \begin{bmatrix} 0 \\ 0 \end{bmatrix} \tag{7}$$

The system under study that is the jib system; is having single input and two outputs so it is Single Input and Multiple Output (SIMO) system. There are two quantifiable output states; position of the trolley and swing angle of the payload. Increase or decrease in the speed of the

trolley can cause oscillation in the swing angle. A Jib observer is vital to discern all the states and feedback it to achieve the anticipated results. The observer used consists of low pass and high pass filters. The leisurely position and velocity states are filtered for smooth motion of the trolley.

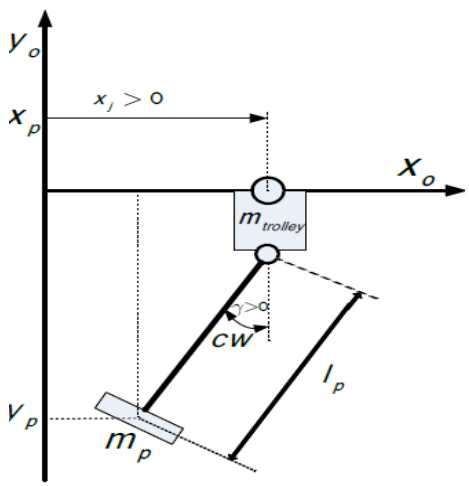

Figure 1. Jib system of crane (free body diagram).

3. PID Tuning through Neuro-Optimal Controller

In order to control linear plant model there exist the optimal controllers designed to effectively regulate with quadratic performance are known as LQR. The PID gains are designed through LQR to control the position of the trolley and minimalizing the swing angle of the payload. Chief procedure of the controllability of the system is to be checked. The cost function which carries the linear quadratic form is given as under:-

$$J_c = \int_0^\infty (x^T Q x + u_i^T R u_i)\, dt \tag{8}$$

Calculation of PID gains is done through $K_{crane} = R^{-1} B^T P$ whereas P will satisfy the following Algebraic Riccati Equation (ARE).

$$A^T + PA + Q = PBR^{-1}B^T P \tag{9}$$

Control input can be found by the equation $u_i = -R^{-1}B^T Px$. For calculation of PID gains by the above mentioned LQR method, following weighting matrices are selected.

R= [0.1]

$$Q = \begin{bmatrix} 5 & 0 & 0 & 0 & 0 \\ 0 & 5 & 0 & 0 & 0 \\ 0 & 0 & 1 & 0 & 0 \\ 0 & 0 & 0 & 5 & 0 \\ 0 & 0 & 0 & 0 & 1 \end{bmatrix} \tag{10}$$

The paper comprises the ANN based intelligent controller which has been used successfully with optimal controller to tune PID gains. There are two stages which are used for enactment of ANN on jib control system. These comprise system identification and control design of jib control system. In the first stage, a neural network model of the crane jib system is designed which is required to be controlled. In the second stage, this neural network plant model of jib crane system is utilized to train the controller. Neural Network Predictive Controller (NNPC) with LQR, neuro-optimal controller, is used here to control the trolley position and swing angle of payload. The NNPC is designed on the technique called the receding horizon and predicts the response of the jib plant response.

$$J_{crane} = \sum_{i=N}^{N_2} \left(y_r(t+j) - y_m(t+j)^2 \right) + \rho \sum_{i=1}^{N_u} \left(u(t+j-1) - u(t+j-2)^2 \right) \tag{11}$$

Where N_1, N_2 and N_u are the horizons for the control increments and the tracking errors, u' is the control signal, y_r is the required response without any swing, ρ is the impact of the sum of the squares of the control increments and y_m is the network complete crane model response[16]. The Simulink model of complete jib crane system including NNPC is shown in Figure 2. The NNPC is trained according to desired outputs and target values for different values of random generated reference inputs. The learning algorithm used in this paper is Levenberg-Marqurardt Back Propagation (BP) Algorithm. This algorithm minimizes the continuous error function through modification of feed forward neural network.

Back Propagation (BP) has robust knowledge competence which further progresses the performance of optimal controller[12]. NN model and NNPC of the jib plant is shown in Figure 3 and Figure 4 respectively. The testing, training and validation data of NNPC after training is shown in Figure 5, 6 and 7 respectively.

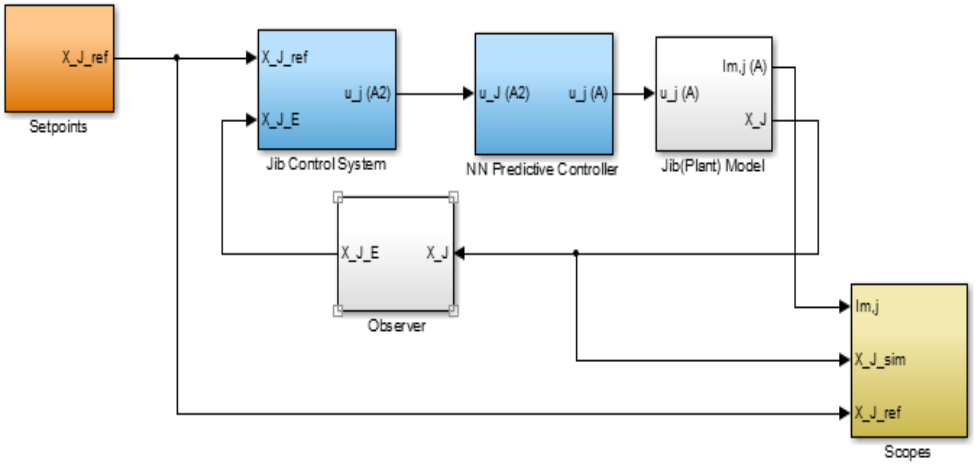

Figure 2. Simulink model of jib system (Neuro-hybrid Controller).

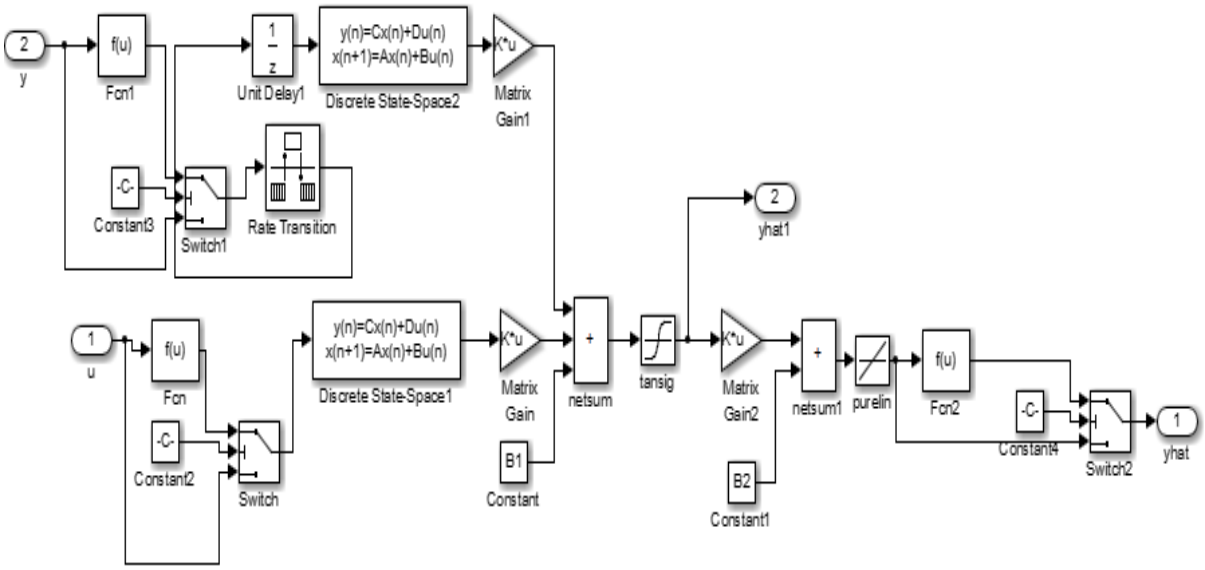

Figure 3. NN model of jib plant.

4. Simulation Marks

The enactment of the suggested neuro-optimal (hybrid) controller is equated with the optimal controller. The causative features towards payload swing are overshooting and undershooting due to initial jerk. It can be conditional that proposed controller has revealed much improved result in terms of overshoot, undershoot and settling time. The imitation results of swing angle and trolley position by optimal controller are shown in Figures 8 and 9 respectively. The simulation results of swing angle and trolley position by neuro-optimal controller are shown in Figures 10 and 11 respectively. It can be simply clinched that overshoot, undershoot and settling time has been decreased to a greater extend by neuro-optimal as compared to optimal controller. The performance evaluation for trolley position and swing angle of both the controllers is represented in Table 1 and Table 2.

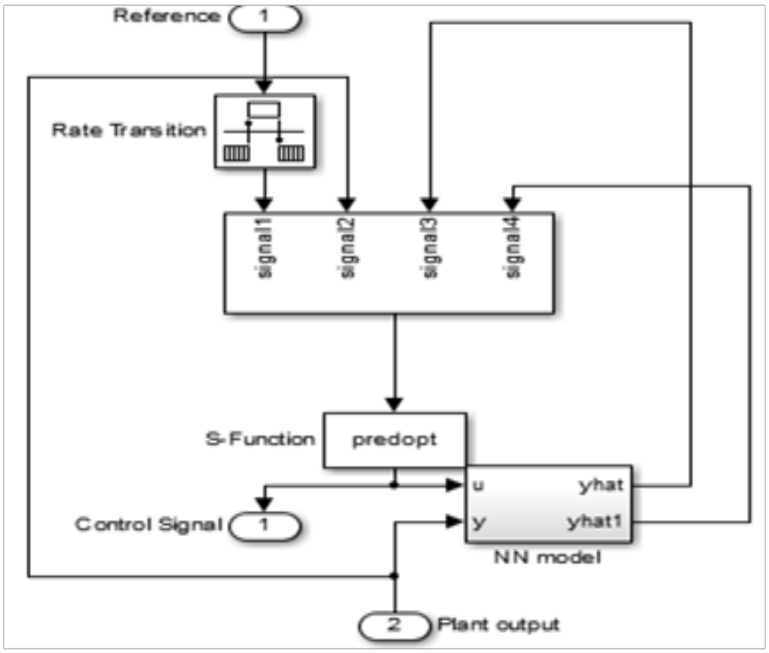

Figure 4. NNPC of jib plant.

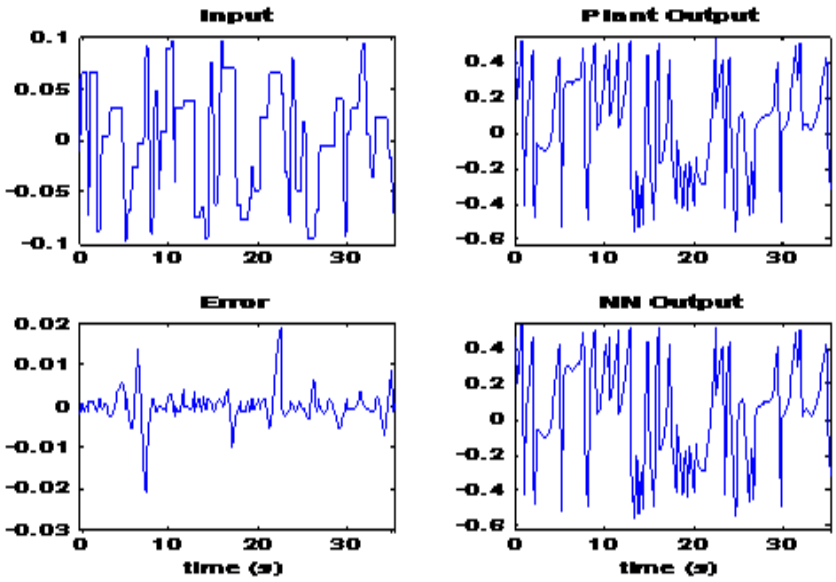

Figure 5. Testing data for NNPC.

5. Conclusion

The trolley position and swing angle of industrial robotic 3DOF crane if controlled through optimal controller will be having certain limitations in the form of settling time, overshoot and undershoot. These limitations are addressed if PID gains are tuned by neuro-optimal (hybrid) controller. The proposed technique of using a hybrid controller has stabilized the system by reducing the overshoot, undershoot and settling time.

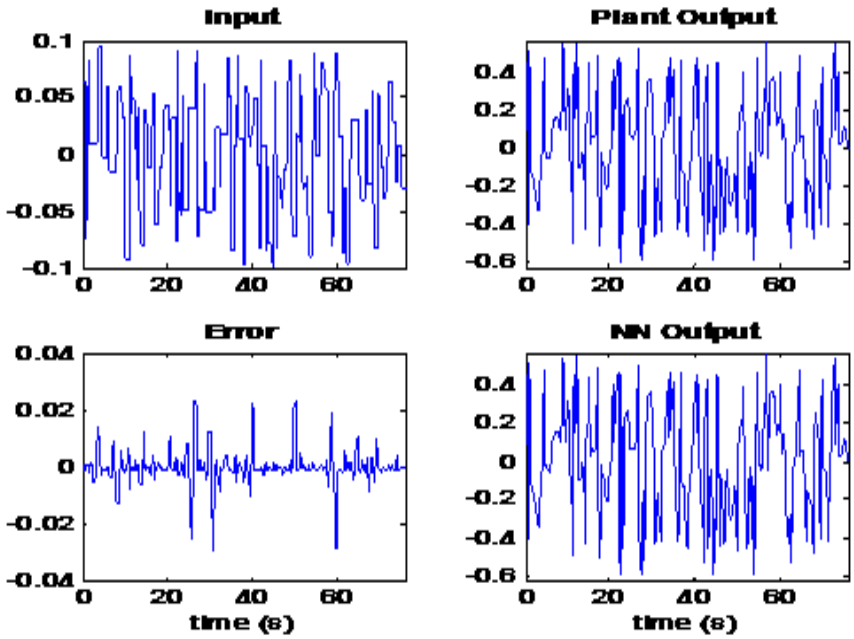

Figure 6. Training data for NNPC.

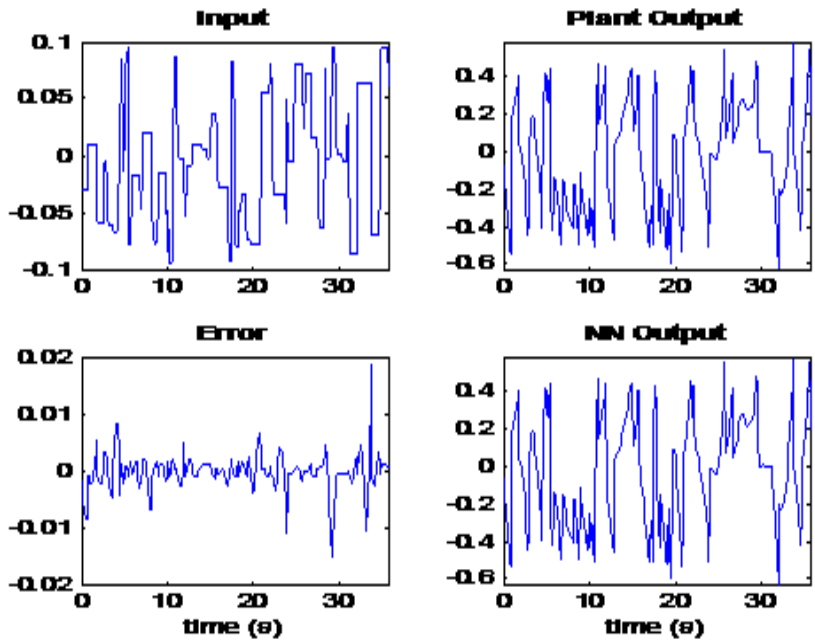

Figure 7. Validation data for NNPC.

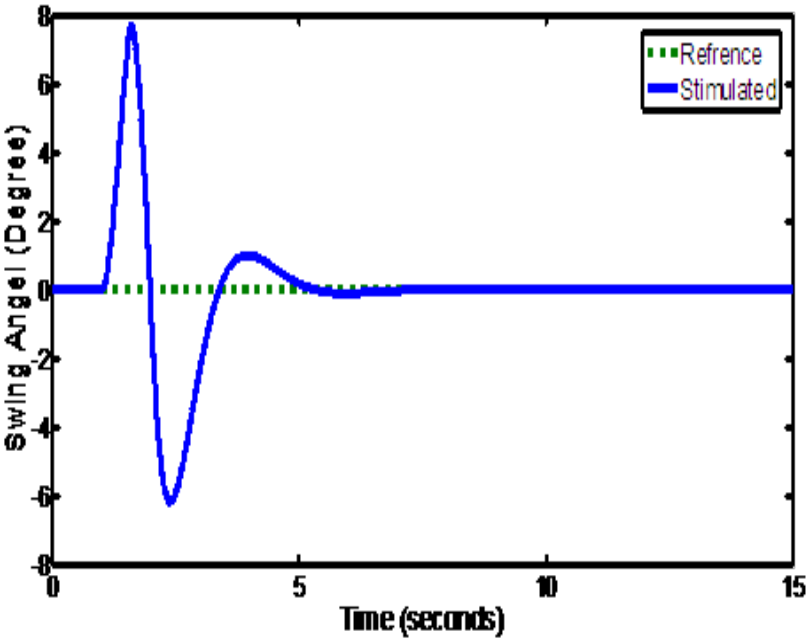

Figure 8. Response of payload swing with optimal controller.

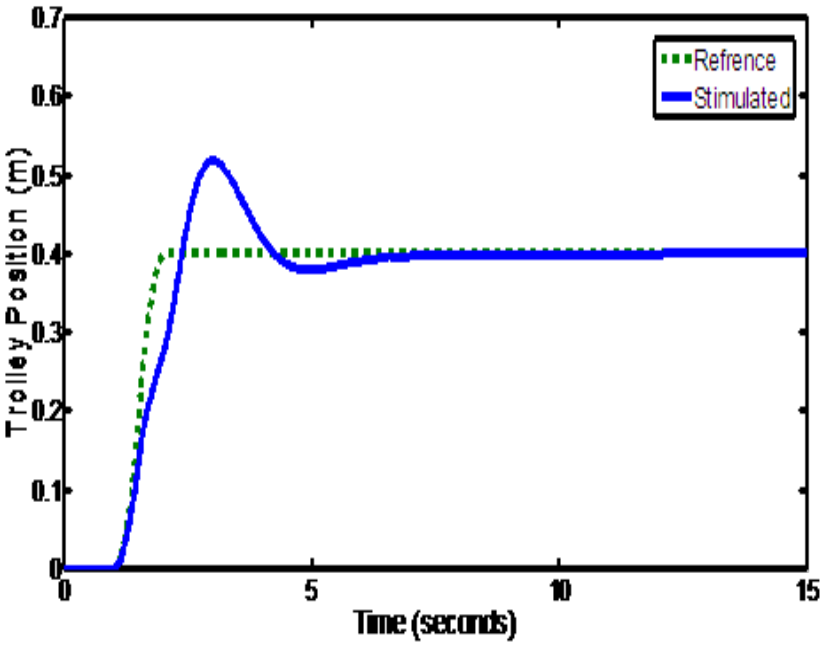

Figure 9. Response of trolley position with optimal controller.

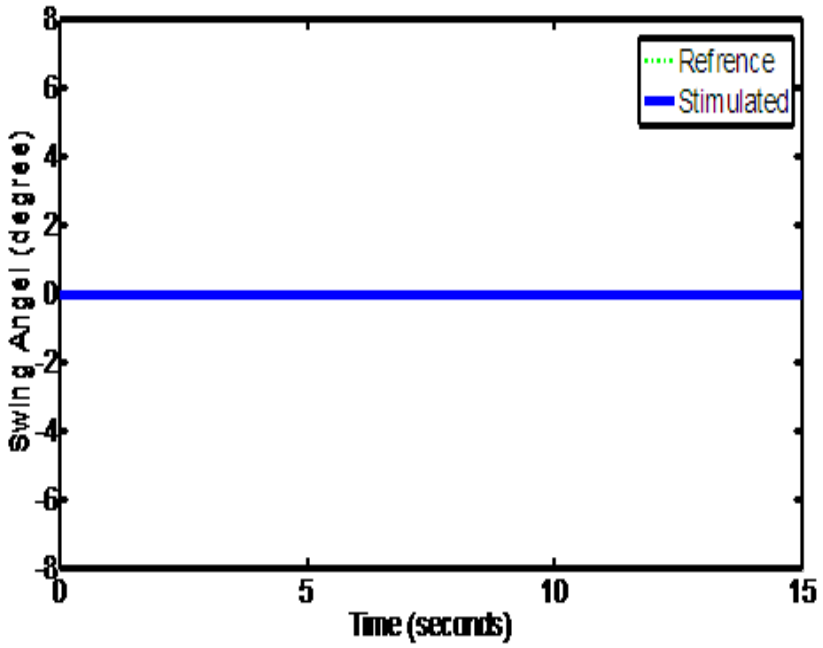

Figure 10. Response of payload swing with neuro-optimal controller.

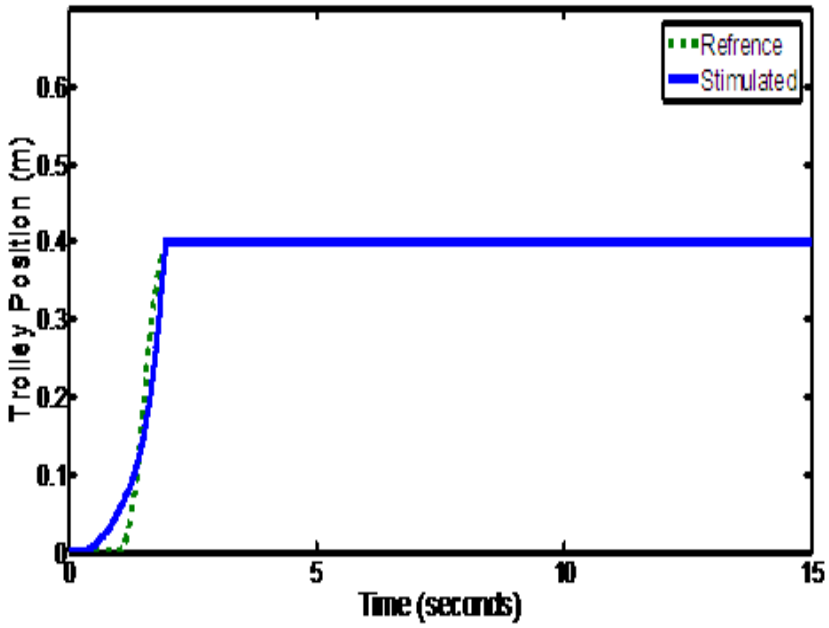

Figure 11. Response of trolley position with neuro-optimal controller.

Table 1. Performance comparison of controllers on trolley position

S#	Control Technique	Settling Time (sec)	Over Shoot	Rise Time (sec)
1.	Optimal Controller	6.07	29.62	1.02
2.	Neuro-Optimal Controller	1.99	0	1.10

Table 2. Performance comparison of controllers on payload swing

S#	Control Technique	Settling Time (s)	Amplitude Diversion (Deg)		Rise Time (s)
			Min	Max	
1.	Optimal Controller	5.05	-6.2	7.7	3.3x10E-6
2.	Neuro-Optimal Controller	20.2x10E-3	-5.7 x10E-33	0	198.9x10E-6

6. References

1. Jalani J. Anti-swing control strategy for automatic 3 DOF crane system using FLC. Indian Journal of Mechanical Engineering. 2000; 1(6):1–9.
2. Faisalm M, Jamil Q , Awais U, Rashid MSSO, Gilani Y, Ayaz A. Iterative Linear Quadratic Regulator (ILQR) controller for trolley position control of quanser 3DOF Crane. Indian Journal of Science and Technology. 2015; 8(16):1–7.
3. Faisal M, Jamil M, Rashid U, Gilani SO, Ayaz Y, Khan MN. A novel dual-loop control scheme for payload anti-swing and trolley position of industrial robotic 3DOF crane. Applied Mechanics and Materials. 2015; 658–64.
4. Jovanovic Z, Antic D, Stajic Z, Milosevic M, Nikolic S, Peric S. Genetic algorithms applied in parameters determination of the 3D crane model. Facta Universitatis, Series: Automatic Control and Robotics. 2011; 10:19–27.
5. Jamil M, Janjua AA, Rafique I, Butt SI, Ayaz Y, Gilani SO. Optimal control based intelligent controller for active suspension system. Life Science Journal. 2013; 10(12s):653–9.
6. Abdel-Rahman EM, Nayfeh AH, Masoud ZN. Dynamics and control of cranes: A review. Journal of Vibration and Control. 2003; 9:863–908.
7. Murthy BV, Kumar YVP, Kumari UVR. Application of neural networks in process control: Automatic/online tuning of PID controller gains for 10% disturbance rejection. IEEE International Conference on Advanced Communication Control and Computing Technologies (ICACCCT); 2012. p. 348–52.
8. Chopra V, Singla SK, Dewan L. Comparative analysis of tuning a PID controller using intelligent methods. Acta Polytechnica Hungarica. 2014; 11(1):235–48.
9. Chen H, Gao B, Zhang X. Dynamical modelling and nonlinear control of a 3d crane. International Conference on Control and Automation, ICCA'05; 2005. p. 1085–90.
10. Vikramaditya B, Rajamani R. Nonlinear control of a trolley crane system. Proceedings of the American Control Conference; 2000. p. 1032–6.
11. Yang JH, Yang KS. Adaptive coupling control for overhead crane systems. Mechatronics. 2007; 17(1):143–52.
12. Luoren L, Jinling L. Research of PID control algorithm based on neural network. Energy Procedia. 2011; 13:6988–93.
13. Rekik C, Djemel M, Derbel N. On the neuro-genetic approach for determining optimal control of a rotary crane. Proceedings of 2003 IEEE Conference on Control Applications, CCA 2003; 2003. p. 124–8.
14. Khwaja S, Jamil S, Awais Q, Asghar U, Ayaz Y. Analysis of classical controller by variation of inner loop and controller gain for two level grid connected converter. Indian Journal of Science and Technology. 2015; 8(20):1–5.
15. Available from: www.quanser.com/products/3dof_crane
16. Demuth H, Beale M. Neural network toolbox for use with MATLAB; 1993.