MATEC Web of Conferences **50**, 01002 (2016)
DOI: 10.1051/matecconf/20165001002

Design and Realization of Avionics Integration Simulation System Based on RTX

Wang Liang[1], Li Bo[2] and Tang Hengxian[2]

[1]*National Key Laboratory of Science and Technology on UAV Northwestern Polytechnic University，710065, Xi'an, China*
[2]*ASN Technology Group Co., 710065, Xi'an, China*

Abstract. Aircraft avionics system becoming more and more complicated, it is too hard to test and verify real avionics systems. A design and realization method of avionics integration simulation system based on RTX was brought forward to resolve the problem. In this simulation system, computer software and hardware resources were utilized entirely. All kinds of aircraft avionics system HIL (hardware-in-loop) simulations can be implemented in this platform. The simulation method provided the technical foundation of testing and verifying real avionics system. The research has recorded valuable data using the newly-developed method. The experiment results prove that the avionics integration simulation system was used well in some helicopter avionics HIL simulation experiment. The simulation experiment results provided the necessary judgment foundation for the helicopter real avionics system verification.

1 Introduction

With the development of science and technology, especially the increasing of computer performance, avionics systems play a more and more important role in the aircraft. Avionics systems have a crucial effect on the aircraft characteristics [1]. At present, with the improvement of aircraft characteristics, avionics systems become more and more complicated. It is too hard to perform the hardware-in-loop simulation experiment of avionics systems [2]. In this paper, a design and realization method of AISS (avionics integration simulation system) based on RTX is introduced to resolve the problem. Using this method, AISS design becomes very easy and AISS has a quite simple software and hardware structure.

RTX (Real-time Extension for Control of Windows) is developed by Ardence Inc. in USA. It is the only software solution designed as a high-performance extension to control Microsoft Windows. RTX is proven in thousands of demanding applications to provide enhanced performance, control, and scalability combined with unmatched dependability for industrial automation, military/aerospace, test and measurement equipment, robotics, and many other industries, all while reducing system costs and speeding time to market.

RTX is specifically designed as a real-time extension to the Windows operating system and is not an RTOS ported to Windows [3]. RTX provides precise control of IRQs, I/O, and memory to ensure that specified tasks execute with proper priority and 100% reliability. By operating in Ring 0 [4,5], RTX ensures the highest performance and requires minimal configuration, supporting sustained interrupt rates of 30 KHz with an average IST latency of less than one microsecond. What is more, the RTX Subsystem provides a high-performance TCP/UDP/IP networking for RTX applications. The RT-TCP/IP Stack supports Internet Protocol version 4 (IPv4) and next generation Internet Protocol version 6 (IPv6)[6].

2 Design of avionics simulation system

AISS is the crucial experiment system in the avionics system HIL simulation experiment [7]. The system can test and verify real avionics systems in the static environment of laboratory. The developers of avionics systems can modify the real avionics system by using the result of the AISS HIL simulation experiment. The typical AISS is divided into five parts: AIS (Avionics Integration Simulator), Pilot Control Stick, Power System, Ethernet Communication System and Signal Transformation Device. Figure 1 shows the whole avionics integration simulation system HIL experiment system structure.

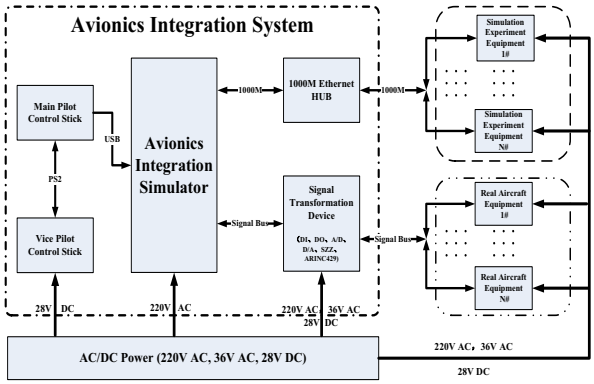

Figure 1. AISS HIL experiment system structure

AIS is the kernel of the AISS HIL experiment system. It can simulate all kinds of avionics tasks such as display of avionics system, data and message process, pilot manipulation, communication and so on [8,9].

Pilot Control Stick is connected with AIS by USB. Experiment operators can inject control commands into AIS by manipulating pilot control stick. AIS processes control commands, and then AIS sends messages to other experiment equipment by the signal transformation device and data cables (1553B, ARINC 429) [10]. Ultimately, it is implemented to simulate pilot manipulation by the pilot control stick.

Power System is used to offer all kinds of power sources such as 36V AC, 220V AC, 28V DC, 15V DC for the AISS HIL simulation experiment.

Ethernet Communication is used to swap data and messages between AISS and experiment equipment such as turn table, flight control simulator.

Signal Transformation Device is used to convert signals between AISS and real aircraft equipments.

2.1 AISS system software architecture

Hierarchical design is adopted in AISS system software programming. According to AISS different functions, AISS system software is divided into five parts: Interface Application, Real-time and Non-real-time Interactivity, RTX Application Dispatch, RTX Hardware Driver, Real Hardware.

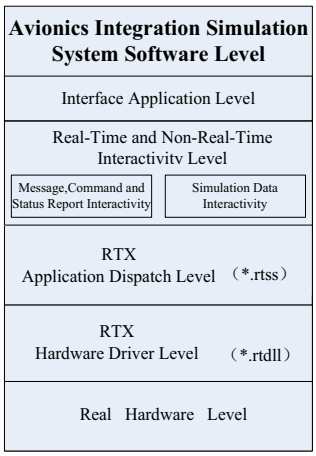

Figure 2. AISS system software levels

Interface Application Level is the level of human computer interaction control and messages display of AISS.

Real-time and Non-real-time Interactivity Level accomplishes the exchange of data and messages between the windows non-real-time application program and the RTX real-time application program [11,12]. According to different data and message characteristics, real-time and non-real-time interactivity level can be divided into two parts: simulation experiment data swap area, command and status report swap area.

RTX Application Dispatch Level masters the different real-time data acquirement, communication and process program running in order to meet simulation experiment needs.

RTX Hardware Driver Level manages and controls data acquirement and data communication hardware cards, including A/D, D/A, DI, DO, 1553B, ARINC 429, Ethernet and so on.

3 Realization of avionics integration simulation system

3.1 Realization of AISS open-loop characteristics

AISS open-loop characteristics mainly tests and verifies whether real aircraft equipments connected with AISS works well and their performance parameters meet the standard. In the AISS open-loop simulation experiment, functions of AISS include avionics signals simulation, fault injection, data storage, data analysis. In order to test and verify whether real aircraft equipments reach the standard, experiment operators can use AISS to inject faults into real aircraft equipments manually by building faults model in the AISS open-loop simulation experiment. Real-time and non-real-time mergence technique, virtual instruments technique and module technique are adopted in the development of AISS open-loop simulation software program. AISS is possessed of the realistic display, real-time response and stable and reliable data transmission by using these techniques.

3.2 Realization of AISS close-loop characteristics

AISS close-loop characteristics mainly tests and verifies whether avionics system design reaches the standard and has any design bugs and whether avionics system is reliable in the whole flight course. In the AISS close-loop simulation experiment, functions of AISS include avionics signals simulation, avionics messages display and monitoring on line, pilot manipulation simulation, sensors characteristics simulation, data storage, data analysis, flight character evaluation. Real-time and non-real-time mergence technique, virtual instruments technique, module technique and real-time Ethernet technique are used in the development of AISS close-loop simulation software program[13,14]. AISS is

possessed of the realistic display, real-time response and real-time stable and reliable data transmission of network by using these techniques. Adopting RTX in windows operating system without any hardware timer, data transmission period of the avionics system can reach 1ms, the delay of AISS close-loop simulation can reach 5ms and the whole AISS close-loop simulation experiment period can reach 20ms in windows OS (operating system)[15,16].

3.3 Realization of AISS area navigation characteristics

Area navigation is one of the most important assessment standards in the avionics system verification. Area navigation is a flight capability that avionics system controls the aircraft to fly in the assigned area according to the track planned beforehand. Area navigation standard is that the errors between real track and planned track should be in a circle with R radius. R value is different in the light of different aircrafts. The flow diagram of AISS area navigation is shown as follows.

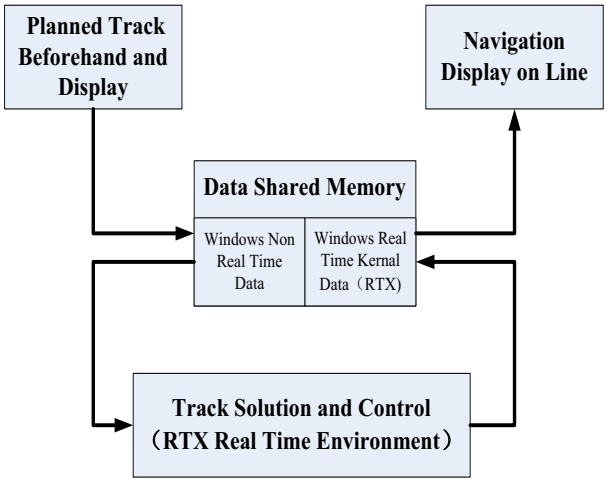

Figure 3. AISS area navigation flow diagram

In figure 3, AISS area navigation is composed of track planned beforehand and display, track solution and control, navigation display on line.

Track planned beforehand and display refer that route markings is installed and flight route is shown.

Track solution and control indicate that route markings planned beforehand are obtained from data shared memory (non-real-time data), then compute the control value on line according to (1), at last avionics system controls the aircraft to fly by the value of control.

$$0.00421 \times \phi + 0.128 \times \nu \times \delta = \sigma \qquad (1)$$

Φ (m): yaw distance, ν (m/s): groundspeed, δ (radian): flight path angle, σ (radian): value of control.

Track solution must be the real-time computation, so the value of control should be computed in the RTX real-time environment [17,18]. At the same time, real track data should be written into data shared memory (real-time data).

Navigation display on line shows the real track obtained from data shared memory (real-time data) and the track planned beforehand. Comparing the real track and the track planned beforehand, experiment operators evaluate the navigation ability of the real avionics system.

4 AISS simulation experiment results

According to the method referred, AISS is used in the some helicopter avionics integration system hardware-in-loop simulation experiment. Some results of experiment are shown as follows.

4.1 AISS open-loop characteristics

The main items include SZZ output, A/D input errors, D/A output errors in this mode.

Table 1. AISS Open-loop HIL Experiment Result

Experiment Type	AISS Open-loop Experiment Result		
	Down-limit	Up-limit	Real Value
SZZ AC 36V signal	35.5 (V)	36.5 (V)	36.24 (V)
SZZ AC 1V signal	0.9 (V)	1.1 (V)	0.98 (V)
A/D input errors	-0.003	0.001	-0.0011
D/A output errors	-0.001	0.005	0.0023

SZZ is a kind of the sensor which can simulate the real aircraft sensor output [19]. In the table, the errors of A/D input and the errors of D/A output are asymmetrical errors.

4.2 AISS close-loop characteristics

AISS close-loop characteristics experiment result is shown as figure 4.

Figure 4. AISS close-loop characteristics experiment result

In figure 4, AISS can display all kinds of flight parameters on line in this mode. Meanwhile, experiment operators can simulate flight by manipulating pilot control stick. The flight parameter enclosed in figure 4

exceeds errors limit. AISS can alarm the flight parameter exceeding errors limit.

4.3 AISS area navigation characteristics

Figure 5 shows the result of AISS area navigation characteristics experiment. Points RA, RB, RC are route markings in figure 5. Broken line is the flight track planned beforehand. Aircraft flied by the RA-RB-RC route. Curve is the real flight track.

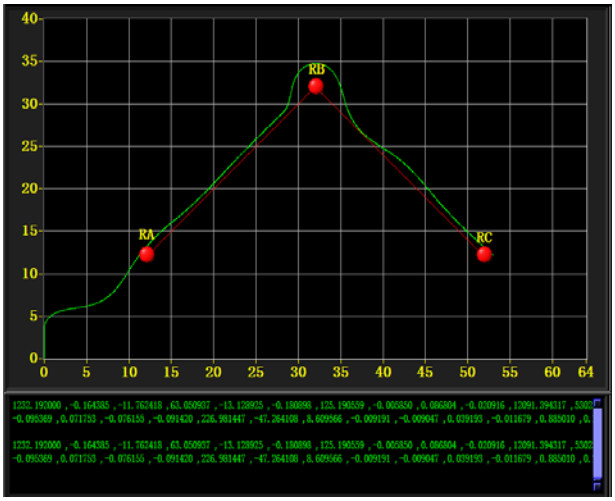

Figure 5. AISS close-loop characteristics experiment result

In figure 5, aircraft set up from point (0,0), then flied over RA. Aircraft switched the RA-RB route to the RB-RC route at a distance of 5km from the route marking RB. Ultimately aircraft landed in route marking RC.

5 Conclusions

The results of the experiment indicate that AISS based on RTX is adopted well in the helicopter hardware-in-loop simulation experiment. RTX is used in the AISS development, so AISS hardware has been reduced and AISS software is only developed in windows OS. The Special RTOS (real-time operating system) such as VxWorks is not used in AISS software [20]. Since RTX is applied in the development of AISS, it reduces the avionics integration simulation system costs and speeds time to the AISS application. Moreover, the development of AISS software becomes very easy and interface of AISS becomes quite friendly.

Using hierarchical design, it becomes quite simple that software developers debug, transplant, maintain and upgrade AISS software. If AISS software needs to be modified, software developers can just only modify some level rather than the whole AISS software. This promoted the software development efficiency highly and avoided the technology risk.

AISS based on RTX provides a good technology scheme and an implement method in different aircraft avionics system simulation experiments. What is more, AISS provides the technological foundation of testing and verifying real avionics system.

References

1. H.-G. Xiong, Z.-H. Wang. *Advanced Avionics Integration Techniques*, 1rd ed, National Defense Industry Press, pp.298-316 (2009)
2. X.-G. Song, X.-G. Zhang. *Fly-by-Wire Flight Control System*, 1rd ed, National Defense Industry Press, pp.97-131(2003)
3. P. A. Laplante *Real-time Systems Design and Analysis*,3rd ed., Wiley-IEEE Press, pp.1-19(2004)
4. D. A. Solomon and M. Russionovich *Inside Microsoft Windows 2000*, 3rd ed, Microsoft Press, pp. 20-69(2000)
5. Z. Dai, MATLAB software for GPS cycle-slip processing, GPS SOLUTIONS,16(2): 267-272 (2012)
6. Ardence Inc. RTX SDK Help Document.USA: Ardence Inc,(2008)
7. T. J. Farmer, T. M. McGruther. AIAA-89-3277 Flight Simulation Technologies Conference and Exhibit, August 14-16, Boston, pp.38-40(1989)
8. A. Cho, J. Kim, S. Lee, C. Kee, Wind Estimation and Airspeed Calibration using a UAV with a Single-Antenna GPS Receiver and Pitot Tube, Ieee T Aero Elec Sys, 47(1): 109-117 (2011)
9. T. Feng, HJP Timmermans, Transportation mode recognition using GPS and accelerometer data, Transport Res C-Emer, 37: 118-130 (2013)
10. M. Barczyk, A. F. Lynch, Integration of a Triaxial Magnetometer into a Helicopter UAV GPS-Aided INS, Ieee T Aero Elec Sys,48(4): 2947-2960(2012)
11. K. Harima, H. Saito, and T. Ebinuma, Navigation Message Decoding for Rocket-Borne GPS Receivers, Ieice T Commun, E95B(11): 3428-3431 (2012)
12. A. Hassan, J. Roth AIAA Paper 2003-3664, presented at the AIAA Applied Aerodynamics Conference, Orlando FL, June, pp.350-355(2003)
13. K. Salisbury, F. Conti Computer Graphics and Applications, pp. 24-32(2004)
14. A. E. Kirkpatrick and J. Sze, Proceedings of Eleventh Symposium on Haptic Interfaces for Virtual Environment and Teleoperator Systems, pp. 27-28 (2004)
15. J. Hu, Z. W. Li, Q. Sun, J. J. Zhu, X. L. Ding, Three-Dimensional Surface Displacements From InSAR and GPS Measurements With Variance Component Estimation, IEEE GEOSCIENCE AND REMOTE SENSING LETTERS, 9(4): 754-758 (2012)
16. Siddhartha Chib, Markov Chain Monte Carlo, Springer Berlin Heidelberg, 769(2011)
17. O. Montenbruck, P. Swatschina, M. Markgraf, S. Santandrea, J. Naudet, E. Tilmans, Precision spacecraft navigation using a low-cost GPS receiver, GPS SOLUTIONS, 16(4): 519-529 (2012)
18. M. Simandl, O. Straka, Functional sampling density design for particle filters, Signal Process,88(11): 2784-2789(2008)
19. D. Manwill, J. Blotter, R. West, A hybrid method for scanning laser registration using a general linear laser model, Mech Syst Signal Pr(2011)
20. G. G. Rigatos, Nonlinear Kalman Filters and Particle Filters for integrated navigation of unmanned aerial vehicles, Robot Auton Syst, 60(7): 978-995(2012)