Workshop Manual
Engine Management Systems

Rolls-Royce & Bentley motor cars

Rolls-Royce Silver Spirit
Rolls-Royce Silver Spur
Rolls-Royce Corniche
Rolls-Royce Corniche II
Bentley Eight
Bentley Mulsanne
Bentley Mulsanne S
Bentley Turbo R
Bentley Continental

1987, 1988, and 1989
model year cars

TSD 4737

September 1989

Printed and Published by
Rolls-Royce Motor Cars Limited
Crewe
Cheshire
CW1 3PL
England

The information in this document is correct at the time of going to print but in view of the Company's continuing efforts to develop and improve its products it may have become out of date by the time you read it and you should, therefore, refer to publication TSD 4736 Product Support Information.

The information given here must not be taken as forming part of or establishing any contractual or other commitment by Rolls-Royce Motor Cars Limited and no warranty or representation concerning the information is given.

Introduction

This manual is written specifically for skilled service personnel and it is therefore assumed that the workshop safety and repair procedures generally accepted by the motor trade are appreciated, understood, and carried out.

Information relating to any subsequent modification will be circulated by the issue of amended or additional pages.

Each chapter incorporates an issue record sheet. Reference must be made to these sheets when determining either the current issue date for a particular page, or the number of pages contained within a chapter/section.

Throughout the manual reference is made to the right-hand and left-hand side of the car, this is determined when sitting in the driver's seat.

In order to identify the two banks of engine cylinders, it should be noted that 'A' bank of cylinders is on the right-hand side and 'B' bank on the left-hand side when viewed from the driver's seat.

Service personnel at Rolls-Royce Motor Cars Limited are always prepared to answer queries or give advice on individual servicing problems. When making an enquiry it is essential that the full vehicle identification number (VIN) is quoted.

Important
When obtaining information for a particular model always refer to the appropriate Chapter and/or Section contents page.

9/89
Printed in England

Communications

All communications should be addressed to one of the following depending upon the car's domicile.

Rolls-Royce Motor Cars Limited
Crewe Cheshire CW1 3PL England
Telephone: 0270 255155
Telex: 36121
Fax: 0270 586548

Rolls-Royce Motor Cars International SA
Au Glapin 1162 St-Prex
Switzerland
Telephone: 021 8062731
Telex: 454216
Fax: 021 8062729

Rolls-Royce Motor Cars Inc.
PO Box 476 Lyndhurst
New Jersey 07071 USA
Telephone: 201 460 9600
Telex: 427788
Fax: 201 460 9392

Rolls-Royce Motor Cars (Canada) Limited/Limitée
6634 Abrams Street
St. Laurent Quebec H4S 9Z7
Canada
Telephone: 514 335 9898
Fax: 514 335 2457

Contents

Printed in England

Chapter A

General information

Contents	Sections						
	Rolls-Royce			Bentley			
	Silver Spirit	Silver Spur	Corniche / Corniche II	Eight	Mulsanne / Mulsanne S	Turbo R	Continental
Contents and issue record sheet	A1	A1	A1	A1	A1	A1	A1
1987/88/89 model years General information	A2	A2	A2	A2	A2	A2	A2

10/88
Printed in England

Issue record sheet

The dates quoted below refer to the issue date of individual pages within this chapter

Sections	A1	A2								
Page No.										
1	10/88	10/88								
2		10/88								
3	10/88	10/88								
4		10/88								
5		10/88								
6		10/88								
7										
8										
9										
10										
11										
12										
13										
14										
15										
16										
17										
18										
19										
20										
21										
22										
23										
24										
25										
26										
27										
28										
29										
30										
31										
32										
33										
34										
35										
36										
37										
38										
39										
40										
41										
42										
43										
44										
45										
46										
47										
48										
49										
50										
51										
52										
53										
54										

10/88

Printed in England

General information

Health risk

Engine oils

Prolonged and repeated contact with mineral oil will result in the removal of natural fats from the skin, leading to dryness, irritation, and dermatitis. In addition, used engine oil contains potentially harmful contaminants which may cause skin cancer. Adequate means of skin protection and washing facilities should be provided.

Health protection precautions

1. Avoid prolonged and repeated contact with oils, particularly used engine oils.
2. Wear protective clothing, including impervious gloves where practicable.
3. Do not put oily rags in pockets.
4. Avoid contaminating clothes, particularly underpants, with oil.
5. Overalls must be cleaned regularly. Discard unwashable clothing and oil impregnated footwear.
6. First aid treatment should be obtained immediately for open cuts and wounds.
7. Use barrier creams, applying before each work period, to help the removal of oil from the skin.
8. Wash with soap and water to ensure all oil is removed (skin cleansers and nail brushes will help). Preparations containing lanolin replace the natural skin oils which have been removed.
9. Do not use fuel, kerosine, diesel fuel, gas oil, thinners, or solvents for washing skin.
10. If skin disorders develop, obtain medical advice.
11. Where practicable, degrease components prior to handling.
12. Where there is a risk of eye contact, eye protection should be worn, for example, chemical goggles or face shields; in addition an eye-wash facility should be provided.

See also UK Health and Safety Executive Cautionary Notice SHW 397 'Effects of Mineral Oil on the Skin'.

Environmental protection precautions

It is illegal to pour used oil onto the ground, down sewers or drains, or into water courses.

The burning of used engine oil in small space heaters or boilers is not recommended unless emission control equipment is fitted. In cases of doubt check with the Local Authority.

Dispose of used oil through authorized waste disposal contractors to licensed waste disposal sites, or to the waste oil reclamation trade. If in doubt, contact the Local Authority for advice or disposal facilities.

Exhaust gases

The exhaust gases contain carbon monoxide (CO), which is odourless and invisible but very poisonous.

Operating the air conditioning system in a confined space increases the danger of these gases entering the car.

Ideally, engines should be run in the open where the exhaust gases can discharge into the atmosphere. However, when running engines within an enclosed working area, the exhaust gases **must** always be removed safely.

Refer to further text within this manual regarding the use of exhaust gas extraction hoses and equipment.

Fuel

Fuel may contain up to 5% of benzene as an anti-knock additive. Benzene is extremely injurious to health (being carcinogenic) therefore, **all contact should be kept to an absolute minimum, particularly inhalation.**

Fuel has a sufficiently high vapour pressure to allow a hazardous build-up of vapour in poorly ventilated areas. Therefore, any work should be carried out in a well ventilated area.

Fuel vapour is an irritant to the eyes and lungs, and if high concentrations are inhaled it may cause nausea, headache, and depression.

Fuel liquid is an irritant to the eyes and skin and may cause dermatitis following prolonged or repeated contact.

When it becomes necessary to carry out work involving the risk of contact with fuel, particularly for prolonged periods, it is advisable to wear protective clothing including safety goggles, gloves, and aprons.

If there is contact with fuel the following emergency treatment is advised.

Ingestion (swallowing)

Do not induce vomiting. Give the patient milk to drink (if none is available water can be given). The main hazard after swallowing fuel is that some of the liquid may get into the lungs. Send the patient to hospital immediately.

Eyes

Wash with a good supply of clean water for at least 10 minutes.

Skin contact

Immediately drench the affected parts of the skin with water. Remove contaminated clothing and then wash all contaminated skin with soap and water.

Inhalation (breathing in vapour)

Move the patient into the fresh air. Keep the patient warm and at rest. If there is loss of consciousness give artificial respiration. Send the patient to hospital.

High voltage levels

Dangerously high voltage levels are present in an electronic ignition system. These levels are not only present in individual components, but also in the wiring looms, plugs, sockets, and test connections.

Both primary and secondary circuits are subject to these high voltages.

Therefore, whenever the system is switched on do not touch any components/circuits contained within the ignition system.

Always wear thick rubber gloves and use insulated tools when working on the system with the ignition switched on.

Workshop precautions

Electrical

Always ensure that the battery master switch is turned to the OFF position or the battery is disconnected, before disconnecting or connecting any electrical components. In addition, note the following.

Never disconnect the battery or switch off the battery master switch when the engine is running.

Always ensure correct polarity when making cable connections.

It is recommended that when carrying out tests on the car wiring, a good quality multi-meter is used. **Never** use generator type meters.

Do not use a test lamp on circuitry that contains electronic components, such as the ignition system.

Before using test equipment always read the manufacturer's instructions.

Do not pierce any electrical leads or looms with test probes, etc.

Do not remove the high tension lead situated between the ignition coil and distributor when the engine is running.

Ensure that no arcing takes place between electrical connections.

Do not supply more than 16 volts direct current to the ignition system.

Fire

Fuel is highly flammable, therefore great care must be exercised whenever the fuel system is opened (i.e. pipes or unions disturbed) or the fuel is removed from the system. Always ensure that 'no smoking' signs and CO_2 (carbon dioxide) fire extinguishers are placed in the vicinity of the vehicle.

Always ensure that the battery is disconnected before opening any fuel lines.

If the fuel is to be removed from the tank, ensure that it is siphoned intu a suitable covered container.

Fuel

Pressure

The fuel system contains fuel that may be under high pressure. Therefore, to reduce the risk of possible injury and fire, always ensure that the system is depressurized by one of the following methods before commencing any work that necessitates opening the system.

1. Allow the pressure to fall naturally by switching off the engine and allowing the vehicle to stand for a minimum of four hours before opening the system.
2. Clean the inlet connection to the fuel filter. Wrap an absorbent cloth around the joint and carefully slacken the pipe nut to release any pressurized fuel from the system. Tighten the pipe nut. Always dispose of the cloth carefully, in accordance with the prevailing Health and Safety regulations.

Cleanliness

It is extremely important to ensure maximum cleanliness whenever work is carried out on the system.

The main points are.

1. In order to prevent the ingress of dirt, always clean the area around a connection before dismantling a joint.
2. Having disconnected a joint (either fuel or air) always blank off any open connections as soon as possible.
3. Any components that require cleaning should be washed in white spirit and dried, using compressed air.
4. If it is necessary to use a cloth when working on the system, ensure that it is lint-free.

General

Before working on the car, always ensure that the parking brake is firmly applied, the gear range selector level is in the park position, and fuse A6 is removed from fuse panel F2 on the main fuseboard.

A number of the nuts, bolts, and setscrews used in the fuel injection system are dimensioned to the metric system, it is important therefore, that when new parts become necessary the correct replacements are obtained and fitted.

Terminology

It should be noted that not all of the components listed are fitted to any one particular model or model year of car. This section merely explains the abbreviation and operation of the specialist components used in the systems.

Air flow sensor plate

Balances the air flow entering the induction system with fuel pressure acting on the control piston.

Air flow sensor potentiometer

Monitors the quantity of air flowing into the engine.

The information is conveyed to the ECU as a measure of engine load and is one of the elements used in the calculation of ignition timing and fuelling requirements.

Air pressure transducer (APT)

The air pressure transducer monitors induction manifold pressure. It passes this information to the relevant ECU so that the necessary electrical corrections can be made to the relevant control system.

On cars fitted with one APT the unit provides instantaneous boost pressure information for the fuel injection and ignition control systems. It also supplies the information to the boost control system.

On cars fitted with two APTs one assembly is connected to the fuel injection system and the second unit is connected to the boost control system.

Air pump clutched pulley
The air injection system is de-activated whenever the coolant temperature is above 33°C (91°F) or engine speed exceeds 3000 + 100 rev/min. This is achieved by dis-engaging the air pump clutch.

Air switching valve
The air switching valve comprises a vacuum operated valve with an integral control solenoid.

At coolant temperatures below 33°C (91°F) the solenoid is energized. The resulting vacuum then applied to the diaphragm chamber opens the valve and allows injected air to pass to the exhaust manifold.

At coolant temperatures above 33°C (91°F) the solenoid is de-energized, the vacuum signal is inhibited and the injected air is re-routed to the engine air intake system.

Auxiliary air valve
Allows calibrated increases in idle circuit air flow and hence engine speed, with closed throttle plates. This provides the correct mixture strength during cold starting and warm-up periods.

Check valves
A check valve is fitted into the air injection pipe to each exhaust manifold. The valves prevent the back flow of exhaust gas.

Cold start injector
Sprays finely atomized fuel during engine cranking (cold engine) into the induction manifold. The amount and duration of cold start injector operation are dependent upon the coolant temperature.

Control piston
Cylindrical plunger type of valve that moves vertically in the fuel distributor. A precision machined edge on the piston opens the metering slits in the fuel distributor.

Coolant temperature sensor
The coolant temperature sensor is located in the thermostat housing. The internal resistance of the sensor changes with the engine coolant temperature.

To achieve the correct starting and warm-up characteristics at low operating temperatures, the ECU uses the signal it receives from the coolant temperature sensor to compute the correction factors for the ignition timing and the fuel injection system electro-hydraulic actuator.

Crankshaft reference sensor
Initiation of A1 ignition and subsequent engine firing order occurs when the front damper mounted reference pin passes the crankshaft reference sensor.

Differential pressure valves
One for each cylinder, maintains the correct pressure of fuel at the metering slits.

Dump valve
Allows compressed air to recirculate back through the air intake. Closure of the dump valve allows induction manifold pressure (boost) to build-up during increasing engine load, to values predetermined by the boost control system.

The dump valve also acts as a relief valve if the boost pressure exceeds a preset level.

Electro-hydraulic actuator (EHA)
Mounted on the fuel distributor, the electro-hydraulic actuator replaces the warm-up regulator used on K-Jetronic systems. A positive increase in current (mA) supply to the EHA results in a corresponding increase in fuel flow and hence fuel mixture strength.

On 1989 model year cars fitted with the KE3-Jetronic fuel injection system, it is also possible to have a negative increase in the supply to the EHA which will 'lean off' the mixture.

Engine running sensor
Inhibits the supply of power to the fuel pump unless the engine is running. The only exception being one by-pass to the circuit, which allows the fuel pump to operate when the engine is being 'cranked' by the starter motor.

Engine speed sensor
The signal generated by the rotation of the four segment timing wheel is sensed by the engine speed sensor. The information is then conveyed to the K-Motronic ECU for calculation of the engine speed.

Exhaust gas recirculation valve (EGR)
The operation of this valve is vacuum controlled.

A proportion of exhaust gas is recirculated from the exhaust system, through the EGR valve, into the induction manifold where it mixes with intake air.

Exhaust gas wastegate
Regulates the flow of exhaust gas to the turbocharger turbine when either boost pressure or engine detonation reach predetermined levels. The boost control system actuates wastegate control.

Four segment timing wheel
The four segment timing wheel has four equal length segments and gaps. Angular relationship of segment to gap is 54° and 36° respectively, and produces a 60:40 ratio signal for engine speed calculation.

Fuel accumulator
When the engine is stopped, the small volume of fuel held in the accumulator (under pressure from the accumulator spring) maintains pressure in the primary fuel circuit to ensure good starting response during the engine 'cranking' operation (i.e. fuel is immediately available).

Fuel cooler
The fuel cooler is located in the left-hand side of the engine compartment. It uses air conditioning system refrigerant to cool the fuel prior to its return to the tank.

Fuel distributor
Apportions the fuel equally to the injectors adjacent to each engine cylinder.

Fuel pressure regulator
Maintains a constant primary circuit fuel pressure. When the engine is stopped, the fuel pressure regulator allows the system pressure to drop rapidly to a value preset by the fuel accumulator (i.e. just below the injector valve operating pressure). It also seals the return line from the lower chambers of the differential pressure value.

Heated oxygen sensor
Measures the oxygen content (which is directly related to the air/fuel ratio) in the exhaust gas and by means of an electrical signal transmits the information to the electronic control unit.

Idle speed actuator
The idle speed actuator contains a stepping motor, the armature of which is connected to a rotating slide. This adjusts the cross sectional area of the by-pass passage.

The duty cycle from the K-Motronic ECU produces a torque at the rotating armature which acts against a return spring.

The by-pass opening is continually adjusted to maintain the correct engine idle speed under all potential engine load conditions.

Injector
One injector is used for each engine cylinder and sprays finely atomized fuel under all running conditions into the induction system.

Intercooler
A charge air intercooler is fitted below the air cleaner assembly. It is situated in the ambient air stream behind the air dam and beneath the front bumper. The intercooler reduces compressed air temperature, this enables recovery of charge air density and maintains optimum engine power output.

KE2-Jetronic electronic control unit (ECU)
Processes input from a chain of engine mounted sensors and provides the necessary electronic fuel corrections in terms of DC mA to the electro-hydraulic actuator. This includes start, post start, warm-up, acceleration enrichment, and positive induction manifold pressure compensation.

K-Motronic digital ECU
The K-Motronic ECU is mounted in the ECU compartment in the rear right-hand corner of the engine compartment.

The K-Motronic system brings together the benefits of digital fuel injection (KE3-Jetronic) and ignition control (EZ 58F) systems into a single electronic control unit (ECU). Other features of the system include cold start and warm-up enrichment, idle speed regulation, and automatic correction of any long term mixture strength deviations.

On cars fitted with catalytic converters the K-Motronic system also provides an 'on-board' self diagnostic facility.

The engine is equipped with several sensors that continuously monitor operating parameters such as engine speed, coolant temperature, and load. The sensors are connected to the digital ECU which is programmed with characteristic data for the following functions, mixture strength control, ignition timing, idle speed control, and purging of the evaporative emission control canister.

Knock sensors
Sense crankcase vibration and then produce an output signal which is processed by the boost electronic control unit. If knock is present the ECU signals the boost control valve to divert the compressor pressure signal more towards the wastegate than atmosphere.

'On board' self diagnostic ability
A facia mounted warning panel illuminates to alert the driver to a number of possible engine related faults. The lamp displays the message 'Check Engine' and is illuminated when the engine is running and a failure is identified.

When the 'Check Engine' lamp is illuminated a fault message (in the form of a four digit code) is stored within the K-Motronic ECU and can be subsequently used to inform workshop personnel of the faulty components or system.

Pressure control valve
Operating from an electrical signal received from the electronic control unit, the valve varies the fuel pressure in the lower chambers of the differential pressure valves.

Pressure damper
Dampens the pressure pulses caused by the operation of the pressure control valve.

Purge control valve
This valve is connected into the purge line of the fuel evaporative emission control system. It regulates the purge flow rate depending upon engine load and mode of operation. The valve receives a duty cycle signal from the engine management system ECU.

Thermal time switch
Situated in the thermostat housing. Depending upon the temperature of the coolant, it controls the operation of the cold start injector.

Throttle position switch (TPS)
Identifies the engine operating mode (i.e. idle, part load, or full load).

Part load occurs when the switch contacts are broken between idle and full load.

Turbocharger
Increases the power and torque of the engine by utilizing energy from the exhaust gas.

Warm-up regulator (WUR)
Increases the control pressure as the engine warms-up so that at normal operating temperature, full control pressure (which is lower than primary system pressure) is exerted on the end of the control piston.

Printed in England

Figure A2-1

Vehicle specification

Specification	UK and all countries not listed		Norway and Sweden		Austria and Switzerland		Middle East and Taiwan		Australia, Canada, Japan, and USA		Workshop Manual
	Naturally Aspirated	Turbocharged	Naturally Aspirated	Turbocharged	Naturally Aspirated	Turbocharged	Naturally Aspirated	Turbocharged	Naturally Aspirated	Turbocharged	
Engine											
L 410 I	87/88/89	–	87/88/89	–	87/88/89	–	87/88/89	–	87/88/89	–	Chapter E TSD 4700
L 410 IT	–	87/88	–	87/88	–	87	–	87/88	–	–	
L 410 ITI	–	89	–	89	–	89	–	89	–	89	
Fuel injection system											
Bosch K-Jetronic	87/88/89	–	87/88/89	–	87/88/89	–	87/88/89	–	87/88/89	–	
Bosch KE2-Jetronic	–	87/88	–	87/88	–	87	–	87/88	–	–	Chapter B TSD 4737
Bosch KE3-Jetronic (electronically controlled by K-Motronic engine management system)	–	89	–	89	–	89	–	89	–	89	
Fuel system											
Recirculatory with in-tank and main pumps	87/88	87/88	87/88	87/88	87/88	87	87/88	87/88	87/88	–	Chapter C TSD 4737
With fuel cooler	89	89	89	89	89	89	89	89	89	89	
Turbocharging system											
Boost pressure control system regulating exhaust gas by-passing turbocharger via a wastegate	–	87/88/89	–	87/88/89	–	87 and 89	–	87/88/89	–	89	Chapter D TSD 4737
Ignition control system											
Constant energy type. Lucas 35 DM 8 distributor conventional vacuum and centrifugal advance	87/88/89	–	87/88/89	–	87/88/89	–	*87/88/89	–	87/88/89	–	Chapter E TSD 4737
Digital non-adjustable EZ 58F. Twin 2 x 4 cylinder distributor	–	87/88	–	87/88	–	87	–	87/88	–	–	Chapter E TSD 4737
Digital non-adjustable EZ 58F (electronically controlled by K-Motronic engine management system). Twin 2 x 4 cylinder distributor.	–	89	–	89	–	89	–	89	–	89	Chapter B TSD 4737
Exhaust emission control system											
Air injection system	–	–	89	89	88/89	89	–	–	***87/ 88/89	89	Chapter F TSD 4737
EGR system	–	–	89	–	88/89	–	–	–	***87/88/89	–	
Catalytic converter system with closed-loop	–	–	**89	**89	**88/89	**89	–	–	†87/88/ 89	†89	
Fuel evaporative emission control system											
Standard purge control system	–	–	88/89	–	88/89	–	87/88/89	††87/88	87/88/89	–	Chapter G TSD 4737
Programmed purge control system	–	–	–	89	–	89	–	89	–	89	
Crankcase emission control system											
Recirculatory closed breather type	87/88/89	87/88/89	87/88/89	87/88/89	87/88/89	87 and 89	87/88/89	87/88/89	87/88/89	89	Chapter H TSD 4737
Air intake system											
Filter mounted on right-hand inner wing valance	87/88/89	87/88	87/88/89	87/88	87/88/89	87	87/88/89	87/88	87/88/89	–	Chapter J TSD 4737
With charge air intercooler	–	89	–	89	–	89	–	89	–	89	
Throttle intake											
Rod and lever system	87/88/89	87/88/89	87/88/89	87/88/89	87/88/89	87 and 89	87/88/89	87/88/89	87/88/89	89	Chapter K TSD 4737

*Middle East has revised ignition timing **Remote CO tapping ***Other than Australia

†Japan has excessive exhaust temperature warning †† With mods for boost system

Fuel injection system

Contents	Sections						
	Rolls-Royce			Bentley			
	Silver Spirit	Silver Spur	Corniche / Corniche II	Eight	Mulsanne / Mulsanne S	Turbo R	Continental
Contents and issue record sheet	B1	B1	B1	B1	B1	B1	B1
1987/88/89 model years Naturally aspirated cars Fuel injection system – K-Jetronic	B2	B2	B2	B2	B2	—	B2
1987/88 model years Turbocharged cars Fuel injection system – KE2-Jetronic	—	—	—	—	—	B3	—
1989 model year Turbocharged cars Fuel injection and Ignition control systems – K-Motronic	—	—	—	—	—	B4	—

Printed in England

Issue record sheet

The dates quoted below refer to the issue date of individual pages within this chapter.

Sections	B1	B2	B3	B4						
Page No.					Page No.					
1	5/88	2/87	10/88	1/89	55	5/89				
2		2/87	5/87	5/88	56					
3	2/90	2/87	5/87	1/89	57	10/88				
4		10/88	10/88	5/88	58	1/89				
5		10/88	10/88	5/88	59	1/89				
6		2/87	5/87	4/89						
7		2/87	5/87	5/88						
8		2/87	5/87	10/88						
9		2/87	5/87	5/88						
10		2/87	5/87	5/88						
11		2/87	10/87	5/88						
12		2/87	10/87	6/88						
13		10/87	10/87	10/88						
14		2/87	——	10/88						
15		10/87	10/87	10/88						
16		10/87								
17		10/87	10/87	5/88						
18		——	10/87	2/89						
19		10/87	2/90	2/89						
20			10/87	10/88						
21		10/87	10/87	4/89						
22		10/87	10/87							
23		10/87	11/87	7/88						
24		2/90	11/87	7/88						
25		11/87	10/87	7/88						
26		11/87	10/87	7/88						
27		10/87	10/87	2/89						
28		10/87	10/87	2/89						
29		2/90	10/87	5/89						
30		10/87	10/87	——						
31		10/87	10/87	2/89						
32		10/88	11/87							
33		10/88	11/87	4/89						
34		10/87								
35		10/87		2/89						
36		10/87		7/88						
37		10/87		2/89						
38		10/88		7/88						
39		1/89		7/88						
40		10/88		7/88						
41				7/88						
42				7/88						
43				7/88						
44				7/88						
45				7/88						
46				7/88						
47				2/89						
48				7/88						
49				7/88						
50				10/88						
51				10/88						
52				10/88						
53				1/89						
54				——						

Printed in England

Fuel injection system

K-Jetronic

Naturally aspirated engines are fitted with the Bosch K-Jetronic continuous fuel injection system.

The K-Jetronic system is a mechanically and hydraulically controlled fuel injection system that requires no form of drive.

The basic principle of operation is that the accelerator pedal controls the movement of the throttle plates which regulate the amount of air drawn into the engine. An air flow sensor fitted upstream of the throttle plates, monitors the quantity of intake air entering the system. Dependent upon the volume of air metered, a fuel distributor apportions a quantity of fuel to the injector adjacent to each cylinder.

The air flow sensor and the fuel distributor are combined into one assembly known as the mixture control unit (see fig. B2-2).

The precisely metered quantity of fuel is continuously sprayed from the injectors in a finely atomized form into the induction manifold behind the engine inlet valves. The air/fuel mixture is then drawn into the engine cylinders whenever an inlet valve opens.

Cars fitted with a catalytic converter also have a 'closed loop' (lambda control) system. This system accurately controls the air/fuel ratio about the stoichiometric value which is necessary to achieve efficient operation of the three-way catalytic converter.

Air flow sensing

The air flow sensor consists of an air cone in which moves an air flow sensor plate mounted on a pivoted lever (see fig. B2-3). When the engine is operating the sensor plate is deflected into the air cone, the deflection being dependent upon the volume of air passing through the cone. The air will deflect the sensor plate until a state of balance exists between the force on the air sensor plate and the counter force provided by fuel at a constant pressure acting on the end of the control piston.

The weight of the air sensor plate and connecting lever are balanced by a counterweight on the fuel distributor side of the lever.

Movement of the control piston and its horizontal control edge (see fig. B2-3) either increases or decreases the open area of the eight metering slits (one for each engine cylinder) in the fuel distributor.

Differential pressure valves (one for each cylinder) located within the fuel distributor, maintain a constant pressure drop across the metering slits.

Since the air flow sensor plate and the control piston are operated by the same lever, the rate of fuel discharge is proportional to the deflection of the air sensor plate which is governed by the calibrated cone within the funnel.

The mixture strength of each engine is adjusted at the engine idle speed setting, during manufacture of the vehicle. This is achieved by turning a screw which alters the position of the air flow sensor plate lever relative to the control piston. Turning the adjustment screw either raises or lowers the control piston for a given engine idle speed position of the air flow sensor plate, thereby richening or weakening the idle mixture. The adjustment screw is subsequently sealed and no further mixture adjustment should be necessary.

Fuel circuit

The fuel supply system comprises the primary circuit, control circuit, and the lambda control circuit (if fitted).

The fuel is at different pressures in various parts of the circuit as follows.

Primary circuit	5,2 bar to 5,8 bar (75.4 lbf/in^2 to 84.1 lbf/in^2)
Differential pressure valves (upper chambers)	4,6 bar (67.0 lbf/in^2)
Differential pressure valves (lower chambers)	4,7 bar (68.1 lbf/in^2) nominal
Control circuit (variable dependent upon engine temperature)	0,5 bar to 3,6 bar (7.25 lbf/in^2 to 52.2 lbf/in^2)
Fuel injector pressure	3,6 bar (52.2 lbf/in^2)

Primary fuel circuit (see fig. B2-4)

The primary circuit fuel pressure is regulated by a plunger type valve to nominally 5,2 bar to 5,8 bar (75.4 lbf/in^2 to 84.1 lbf/in^2).

In the fuel distributor the fuel initially enters a passage which joins with the lower chambers of the differential pressure valves via a small fixed orifice (see fig. B2-7).

When the engine is operating the fuel flows through the metering slits (machined into the barrel of the fuel distributor) to the upper side of the diaphragm in the differential pressure valves. Then through injector lines to the injector valves.

The injector valves have an opening pressure of approximately 3,6 bar (52.2 lbf/in^2) and are designed to spray finely atomized fuel under all operating conditions.

From the primary fuel circuit a fuel line feeds the cold start injector.

When the engine is stopped, the primary system pressure regulator allows the system pressure to drop rapidly to a pressure governed by the fuel accumulator which is just below the injector opening pressure and maintains it at this level by sealing the return line to the fuel tank. This seal is effected by a rubber 'O' ring fitted to the valve which is compressed against the fuel distributor housing (see fig. B2-5).

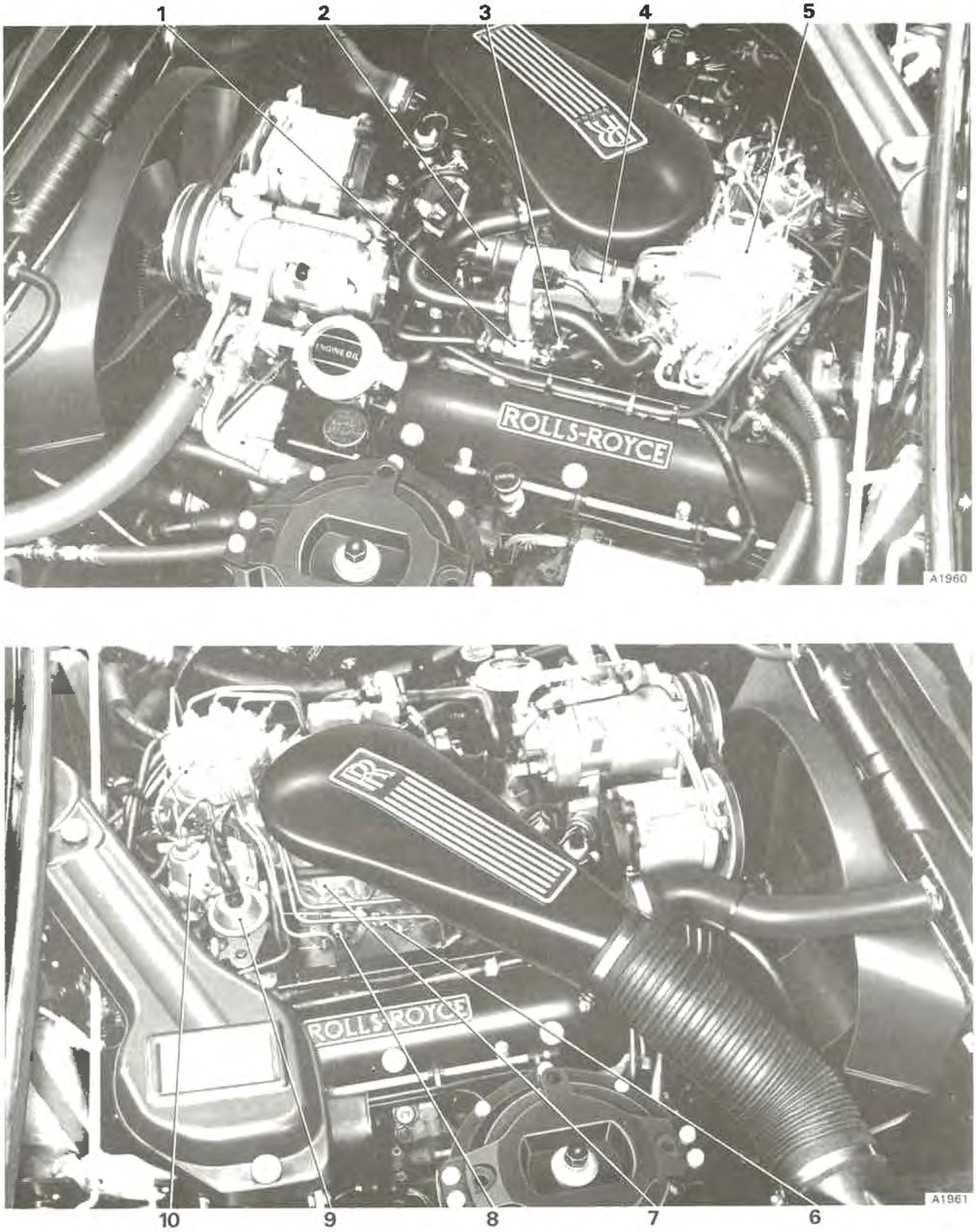

Fig. B2-1 Engine compartment details

1 Idle speed control solenoid
2 Fuel pressure damper
3 Fuel pressure control valve
4 Auxiliary air valve
5 Fuel distributor
6 Secondary throttle spindle
7 Air meter
8 Primary throttle spindle
9 Acceleration enrichment switch
10 Warm-up regulator

Simultaneously a push valve, integral with the system pressure regulator closes and prevents leakage through the control circuit. This retention of fuel pressure in the system is important because during 'hot soak' conditions it prevents fuel vaporization and subsequent poor starting. In addition, the sudden pressure drop at the fuel injectors (causing them to close) prevents 'dieseling' (i.e. the tendency of an engine to continue 'running-on' after the ignition has been switched off).

Control fuel circuit (see fig. B2-4)
The control circuit provides the control pressure that acts upon the upper end of the control piston and provides the balancing force for the air load acting on the air sensor plate. In addition, it also provides a means of enriching the mixture for cold starting.

The control circuit is supplied with fuel from the primary circuit through a restrictor in the fuel distributor (see fig. B2-7). The fuel then passes either into the chamber above the control piston via a damping restrictor or via an external connection to the warm-up regulator, where nominal control pressure of 3,6 bar (52.2 lbf/in^2) [3,5 bar (50.7 lbf/in^2) on cars fitted with a lambda control system] is maintained at normal engine operating temperature (at sea level).

The pressure regulator in the warm-up regulator is tensioned by a bi-metal spring when the engine is cold. This in turn reduces the load on the regulating valve and correspondingly lowers the control pressure.

With a lower control circuit pressure, the air flow sensor plate is allowed to travel further downwards in the air cone for a given rate of air consumption which in turn, moves the control piston further up in the barrel of the fuel distributor. This increases the opening of the fuel metering slits and thereby enriches the mixture.

The bi-metal of the warm-up regulator is heated electrically whenever the engine is running. This causes the effect of the bi-metal to be reduced with a corresponding reduction in the amount of mixture enrichment.

The warm-up regulator is mounted so that it can assume the temperature of the engine. Therefore, when the engine is started in the semi-warm condition, unnecessary enrichment of the air/fuel mixture is avoided.

Fuel from the warm-up regulator flows through the push valve assembly which assists in maintaining the pressure by closing the primary circuit when the engine is switched off. Excess fuel flows around the push valve and into the fuel tank return line which is not under pressure (see fig. B2-4).

Fuel distribution (see fig. B2-4)
To ensure that the fuel is uniformly distributed to the cylinders a control piston and barrel assembly is used (see fig. B2-11). This assembly operates by controlling the open cross sectional area of the metering slits machined in the barrel.

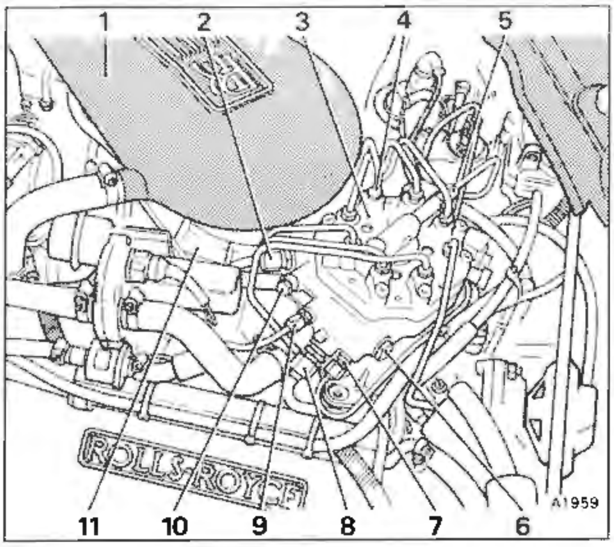

Fig. B2-2 Mixture control unit
1 Air intake
2 Fuel supply to distributor
3 Fuel distributor
4 Fuel feed to injector
5 Fuel feed to warm-up regulator
6 System pressure regulator
7 Fuel return from warm-up regulator
8 Fuel return to tank
9 Fuel feed to cold start injector
10 Fuel feed to pressure control valve
11 Air meter

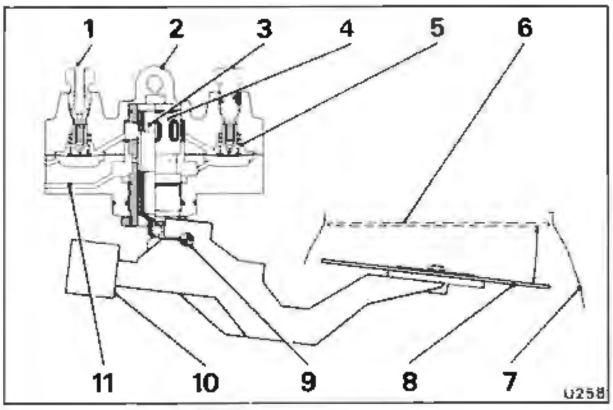

Fig. B2-3 Air flow sensor and fuel distributor (mixture control unit)
1 Fuel feed pipe to injector
2 Fuel distributor assembly
3 Control piston
4 Fuel distributor barrel
5 Differential pressure valve
6 Position of air sensor plate at idle speed
7 Air meter
8 Air flow sensor plate
9 Pivot
10 Counterbalance weight
11 Fuel inlet

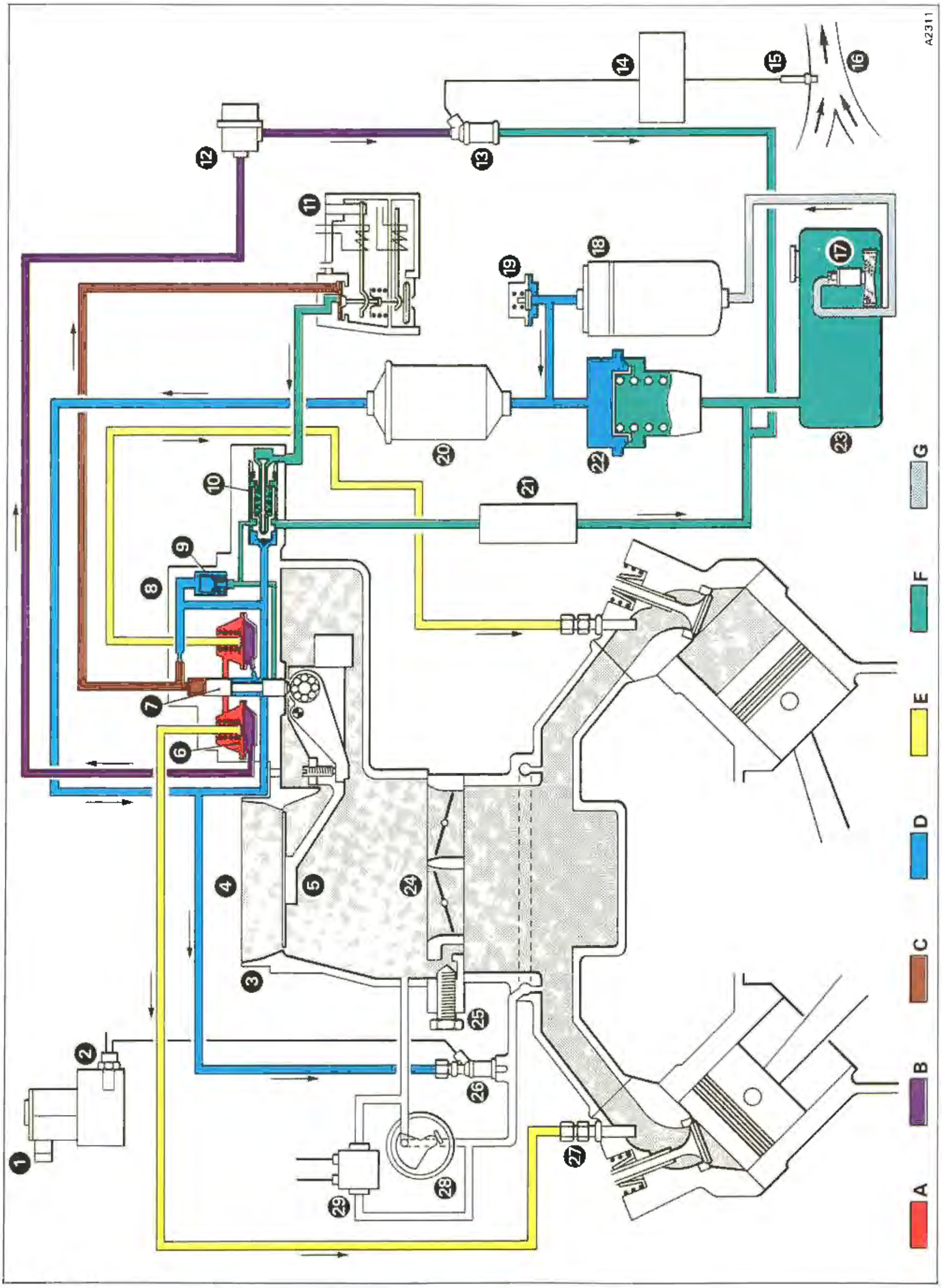

Fig. B2-4 Fuel injection system

Key to fig. B2-4 Fuel injection system

1 Thermostat housing
2 Thermal time switch
3 Air cone
4 Air meter
5 Air sensor plate
6 Differential pressure valve
7 Control piston
8 Fuel distributor
9 Anti-suction valve
10 System pressure regulator
11 Warm-up regulator
12 Fuel damper
13 Pressure control valve
14 Electronic control unit (ECU)
15 Oxygen sensor
16 Exhaust system
17 Fuel pre-pump
18 Fuel pump
19 Fuel pressure damper
20 Fuel filter
21 Fuel cooler
22 Fuel accumulator
23 Fuel tank
24 Throttle body
25 Idle speed adjusting screw
26 Cold start injector
27 Injector
28 Auxiliary air valve
29 Idle speed control solenoid
A Upper chamber pressure
B Lower chamber pressure
C Control pressure
D Primary circuit pressure
E Injection pressure
F Unpressurized return line
G Pre-pump to main pump supply pressure

Note Items 12, 13, 14 and 15 are fitted to cars with a lambda control system (closed loop mixture control).

The barrel has one slot shaped opening (the rectangular metering slit) for each cylinder. Each metering slit has a differential pressure valve to hold the drop in pressure at the metering slits constant at the various flow rates. As a result, effects of variations in the primary system pressure and differences in the opening pressure of the injector valves are eliminated.

With a constant drop in pressure at the metering slits, the amount of fuel flowing to the injector valves depends solely upon the open cross sectional area of the slits.

Differential pressure valves (see figs. B2-4 and B2-7)
There is a differential pressure valve for each engine cylinder. The valve is a diaphragm type consisting of an upper and lower chamber with the diaphragm separating the two halves (see fig. B2-7). The basic principle of operation is that the fuel pressure in the upper chamber is at approximately 0,1 bar (1.5 lbf/in^2) less than the pressure in the lower chamber. The

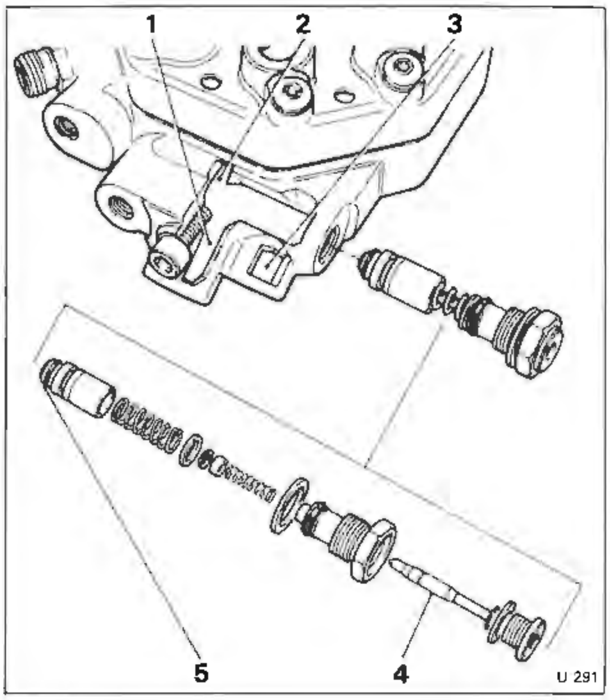

Fig. B2-5 System pressure regulator
1 Fuel return to tank
2 System pressure line
3 Fuel return from warm-up regulator
4 Push valve
5 Regulator valve sealing face

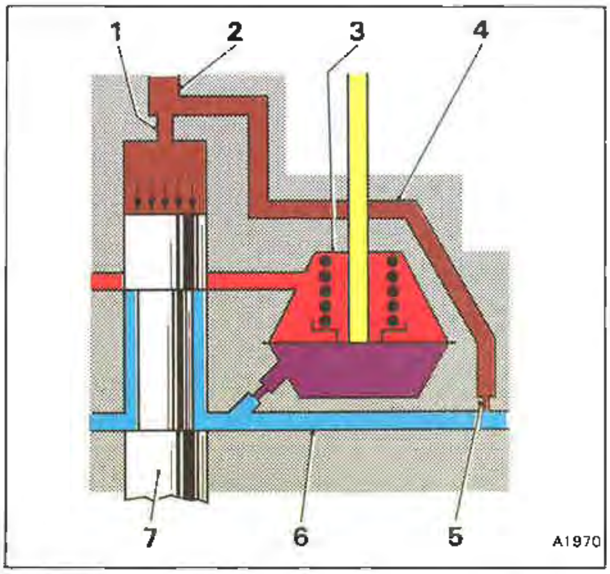

Fig. B2-6 Relationship between primary circuit pressure and control pressure
1 Damping restrictor
2 Fuel feed to warm-up regulator
3 Differential pressure valve
4 Control circuit pressure
5 Control circuit restrictor
6 Primary circuit pressure
7 Control piston

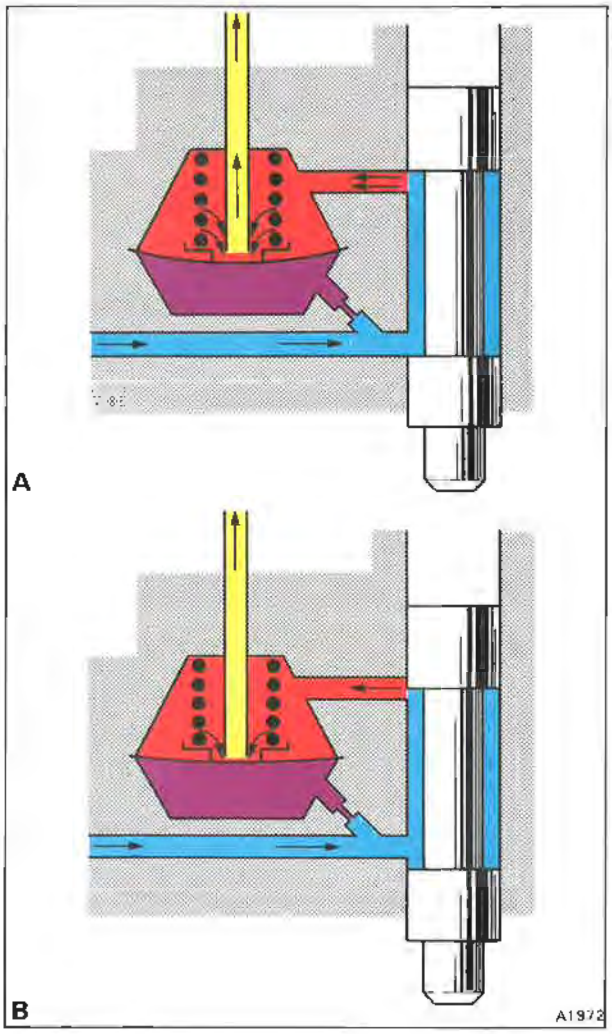

Fig. B2-7 **Differential pressure valve**
A High flow rate
B Low flow rate

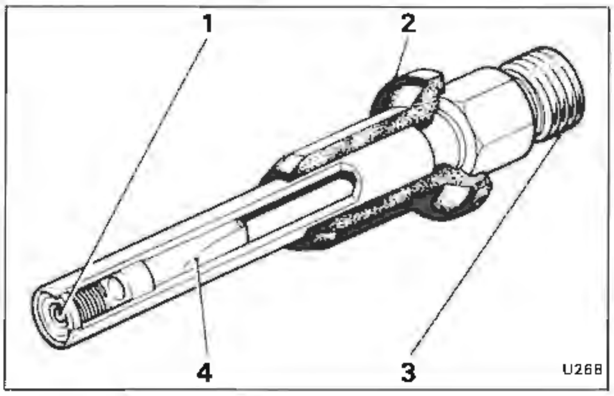

Fig. B2-8 **Injector**
1 Nozzle
2 Insulating sleeve
3 Fuel supply connection
4 Filter

pressure differential is produced by the helical spring built into the upper chamber. Under these conditions equilibrium of forces exists at the diaphragm.

If additional fuel flows through the metering slit into the upper chamber, the pressure rises temporarily. This increase in pressure will force the diaphragm downwards until a differential pressure of 0,1 bar (1.5 lbf/in²) again prevails at the metering slit.

At higher rates of fuel flow, the diaphragm opens a larger annular cross section, so that the pressure differential remains constant. If the rate of fuel flow decreases, the diaphragm reduces the amount of fuel flowing into the injector line.

The total travel of the diaphragm is only a few hundredths of a millimetre.

Note The fuel pressure in the lower system and therefore, the pressure differential between the two halves of the chamber is affected slightly by the operation of the lambda control system.

'Closed loop' mixture control system (Lambda control system)

Cars fitted with a catalytic converter also have a 'closed loop' lambda control system.

The lambda control system is an addition to the K-Jetronic fuel injection system and is fitted to give accurate control of the air/fuel ratio about the stoichiometric value which is necessary to achieve efficient operation of the three-way catalytic converter.

The control principle is based on the fact that by means of the oxygen sensor the exhaust is continuously monitored and the amount of fuel fed to the engine is continuously corrected.

With an ideal (stoichiometric) air/fuel mixture the air factor is identified by the value * $\lambda = 1$. At this mixture ratio the output signal from the oxygen sensor develops a voltage jump which is processed by the electronic control unit. This voltage changes sharply for small deviations from the stoichiometric mixture (the air/fuel ratio for full combustion of the fuel). The electronic unit therefore, controls the injection system for 'closed loop' fuel metering by modulating the signal to the pressure control valve. This in turn, affects the pressure in the lower chambers of the differential pressure valves.

By responding to the unconsumed oxygen content of the exhaust gas, the sensor registers the extent of the complete combustion and regulates the air/fuel mixture to the ideal or stoichiometric ratio.

$$\lambda = \frac{\text{Actual intake air}}{\text{Theoretical requirement}}$$

Description of the components

Injector (see fig. B2-8)

An injector is fitted into the induction system just behind each inlet valve. The injector opens automatically when the fuel pressure in the injection lines reaches 3,6 bar (52.2 lbf/in²). It has no metering functions, its purpose being to continually spray finely atomized fuel under all running conditions. The injector is supported in a specially shaped moulded rubber sleeve, it is pressed (not screwed) into position. The hexagonal section is provided to hold the injector while the fuel line is attached. A retention plate is fitted over the injector and secured to the cylinder head by two small setscrews, each plate retains two injectors.

Cold start injector (see fig. B2-9)
In order to facilitate engine starting particularly from low ambient temperatures, a cold start injector is fitted into the induction manifold and sprays additional finely atomized fuel during engine cranking. A thermal time switch mounted in the thermostat housing controls the operation of the cold start injector. This injector ceases to operate when the ignition key is released from the START position.

In the cold start injector a helical spring presses the movable armature and seal against the valve seat, closing the fuel inlet. When the armature is energized (and therefore drawn upwards) the fuel port is opened and the pressurized fuel flows along the side of the armature to the swirl nozzle.

Idle speed adjustment screw (see fig. B2-10)
This adjustment screw is situated at the forward end of the throttle body and allows limited adjustment of the engine idle speed. During manufacture of the vehicle the engine idle speed is set using the throttle butterfly valve adjusting screws. These screws are situated on the side of the throttle body and sealed after the initial adjustment.

Afterwards, adjustment to the engine idle speed is by means of the idle air bleed screw situated at the forward end of the throttle body. This screw is the only means of limited adjustment to the engine idle speed.

Idle speed control solenoid (see fig. B2-10)
Moving the transmission selector from the neutral position causes the engine idle speed to decrease, due to the additional load of the transmission.

To compensate for this idle speed decrease a solenoid valve is opened (energized) when the transmission selector is moved from the neutral position into any forward gear. This allows more intake air to by-pass the throttles and effectively increase the idle speed to the optimum setting.

Air flow sensor plate (see fig. B2-3)
The sensor plate is housed in the air venturi of the air meter. Its function is described on page B2-1 under the heading of Air flow sensing.

Differential pressure valves (see fig. B2-7)
The differential pressure valves (one for each engine cylinder) are housed in the fuel distributor. Their function is described on page B2-5 under the heading Differential pressure valves.

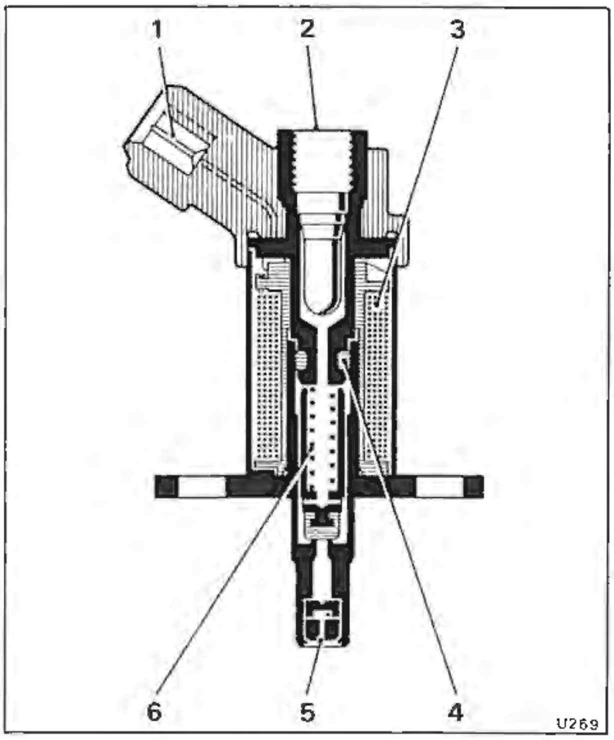

Fig. B2-9 Cold start injector
1 Electrical connection
2 Fuel inlet
3 Magnetic coil
4 Sealing ring
5 Swirl nozzle
6 Armature

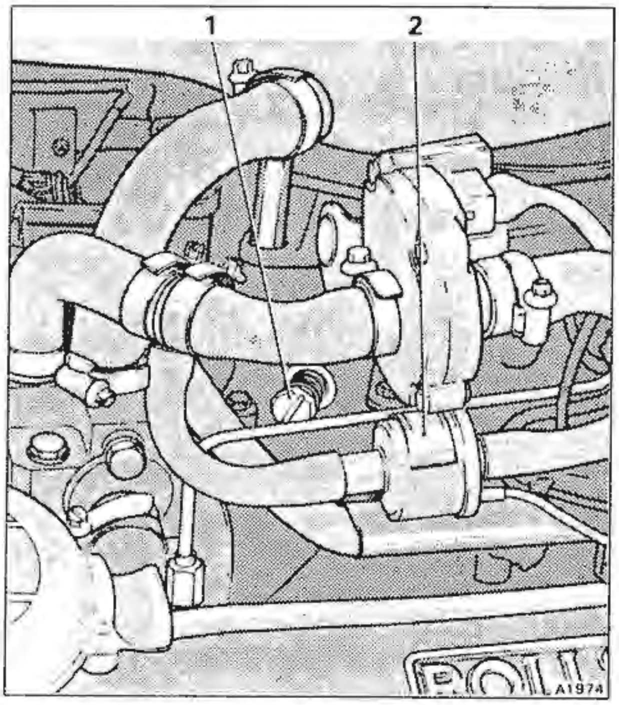

Fig. B2-10 Idle speed control
1 Idle speed adjustment screw
2 Idle speed control solenoid

Fuel distributor (see fig. B2-3)
The fuel distributor forms part of the mixture control unit. Its function is described earlier in this section.

Control piston (see figs. B2-3 and B2-11)
This is a cylindrical plunger type of valve that moves vertically in the fuel distributor. It is operated by a lever connected to the air flow sensor plate.

A precision machined edge on the control piston opens the fuel metering slits in the fuel distributor barrel and therefore, controls the amount of fuel injected into the engine cylinders.

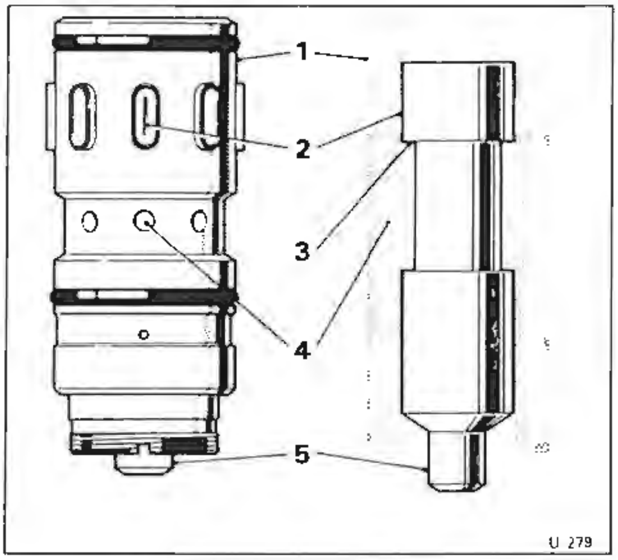

Fig. B2-11 Fuel distributor barrel and control piston
1 Fuel distributor barrel
2 Fuel metering slits
3 Piston control edge
4 Fuel inlet ports
5 Control piston

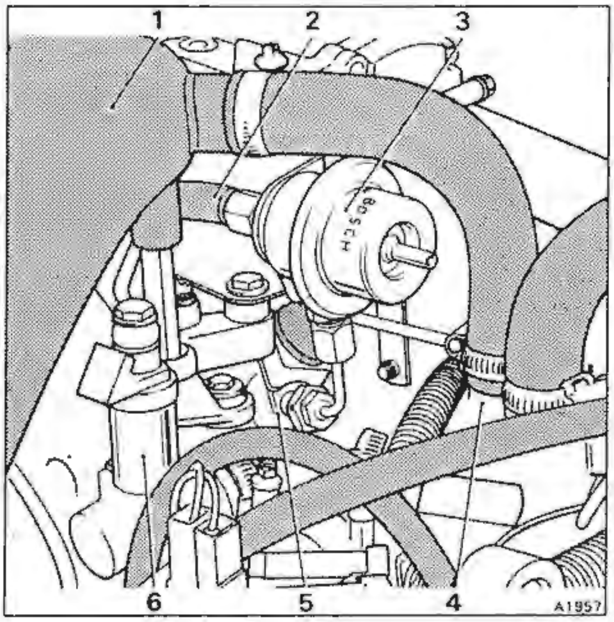

Fig. B2-12 Fuel pressure control valve and damper
1 Air intake elbow
2 Fuel feed from distributor
3 Pressure damper
4 Crankcase breather housing
5 Pressure control valve
6 Cold start injector

System pressure regulator (see fig. B2-5)
When the engine is operating this regulator maintains a constant primary circuit fuel pressure. When the engine is stopped, the regulator valve allows the fuel pressure in the primary circuit to fall rapidly to just below the injector opening pressure. In addition, the push valve (the small valve on the outer end of the regulator) closes and prevents leakage from the control circuit.

Fuel pressure damper (see fig. B2-12)
Fitted to cars with a lambda control system.

This assembly is designed to 'damp' the pressure pulses caused by the operation of the pressure control valve.

Fuel pressure control valve (see fig. B2-12)
Fitted to cars with a lambda control system.

This valve is operated by an electrical signal received from the electronic control unit.

The pressure control valve receives square-wave pulses of constant frequency (70 cycles per second) but of variable width (i.e. the proportion of time that the valve remains open during any one cycle is variable, controlling the flow rate through the valve). This action varies the fuel pressure in the lower chambers of the differential pressure valves.

Electronic control unit (ECU) (see fig. B2-13)
Fitted to cars with a lambda control system.

The electronic control unit, converts the electrical signal from the oxygen sensor into a hydraulic correction of the fuel mixture. This is achieved by the signal it transmits to the pressure control valve.

The oxygen sensor reacts to a change from a weak to a rich mixture with a voltage jump which is processed by the electronic control unit.

As a result of this change to a richer mixture, the control unit changes the open-closed ratio of the pressure control valve smoothly towards a weaker mixture, until the oxygen sensor reacts to the resulting weaker mixture. This develops a voltage jump in the opposite direction, causing the open-closed ratio of the pressure control valve to be changed in the richer mixture direction.

To avoid driving continuously with a weak mixture if the oxygen sensor malfunctions, the control operation is periodically monitored within specified fixed time spans and, in the event of a defect, the control operation is switched to the 'internal-signal mode'. When in this operating mode the pressure control valve receives a constant pulse signal to control the on-off ratio. In addition a warning lamp situated on the facia will be illuminated to indicate that attention is necessary.

In addition to the basic function of the electronic control unit to evaluate the signal from the oxygen sensor, it also performs the following additional functions.

Until the oxygen sensor attains its operating temperature, a control function cannot take place. Therefore, during this warm-up period the electronic control unit is switched to the 'internal-signal mode' ('open loop control').

When it is necessary for the engine to operate under full load conditions it is also desirable to switch from the 'external-signal mode' or 'closed loop control'. This is achieved by a throttle position switch, situated on the side of the throttle housing activating a micro-switch and thereby, switching the electronic control unit into the 'internal-signal mode'.

Simultaneously, the electronic control unit modifies the signal to the pressure control valve to provide the additional enrichment required for satisfactory engine operation at full throttle.

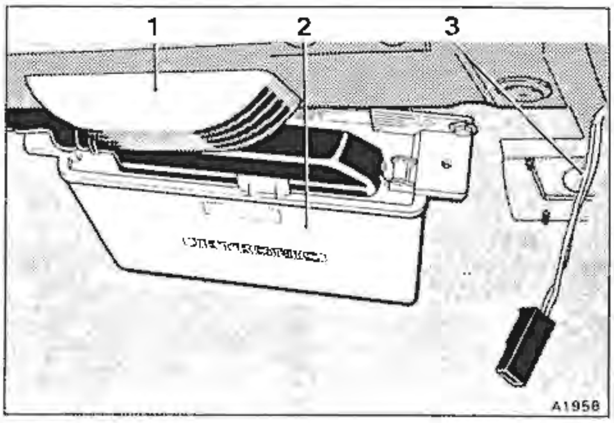

Fig. B2-13 Electronic control unit
1 Knee roll sensor (Auto ACU)
2 Electronic control unit
3 Test lead (black/slate)

Oxygen sensor (see fig. B2-14)
Fitted to cars with a lambda control system.

The oxygen sensor measures the oxygen content in the exhaust gas and by means of an electrical signal transmits the information to the electronic control unit.

The assembly consists of a sintered zirconium dioxide ceramic, impregnated with certain metal oxides. The surfaces of the tube are coated with a thin layer of platinum. In addition, a porous ceramic layer is applied to the outer side which is exposed to the exhaust gas. The surface of the hollow inner side of the ceramic tube is in contact with the ambient air.

When in position, the ceramic sensor tube is subjected to the exhaust gas on the outside, whilst ambient air is allowed to pass inside the sensing tube. If the oxygen concentration inside the sensor differs from the outside, a voltage is generated between the two boundary surfaces due to the characteristics of the material used. This voltage is a measure of the difference in the oxygen concentration inside and outside the sensor.

The ceramic sensor tube exhibits a steep change in signal output (approximately 1000 mV) when stoichiometric conditions are approached (see fig. B2-15).

The oxygen sensor will only exhibit this steep change in signal output when a certain pre-determined operating temperature is attained. Therefore, to reduce the oxygen sensor's dependency upon exhaust gas to maintain it at operating temperature, the sensor is heated electrically, using a ceramic heating rod fitted inside the zirconium dioxide tube.

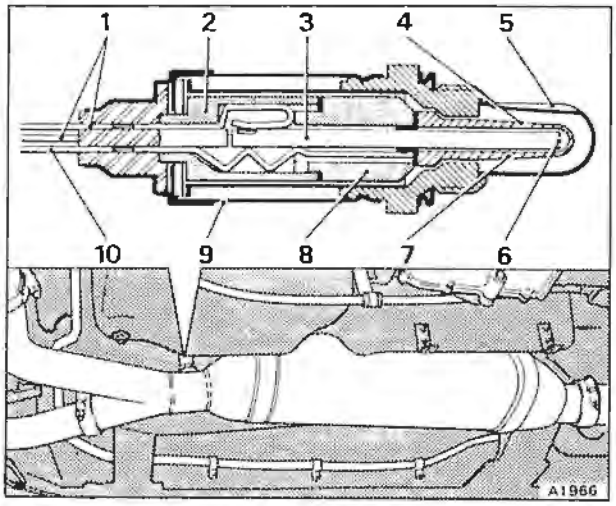

Fig. B2-14 Oxygen sensor
1 Two spring contacts for heater
2 Ceramic insulator
3 Heater
4 Ceramic sensor body
5 Protective tube
6 Air side
7 Exhaust gas side
8 Supporting ceramic
9 Protective sleeve
10 Contact for sensor

When starting the engine, particularly from cold, satisfactory 'closed loop control' is not possible. During these conditions the electronic control unit supplies a fixed on-off ratio signal ('internal-signal mode') until the oxygen sensor attains its operating temperature, otherwise driveability would be impaired at this time without the regulating effect of control valve operation. If the oxygen sensor fails to function, this fixed on-off ratio signal is transmitted to the control valve in addition to illuminating a warning lamp on the facia.

Anti-suction valve (see fig. B2-4)
When the engine is switched off it is possible for some fuel to vapourize and a depression can then occur above the control piston when the fuel condenses.

The depression would tend to lift the control piston and cause an excessively rich mixture when the engine is started.

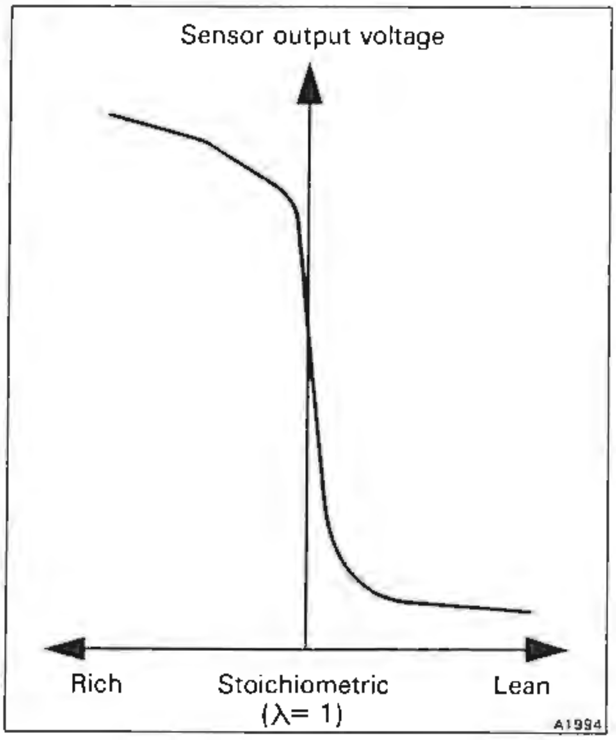

Fig. B2-15 Typical sensor output signal

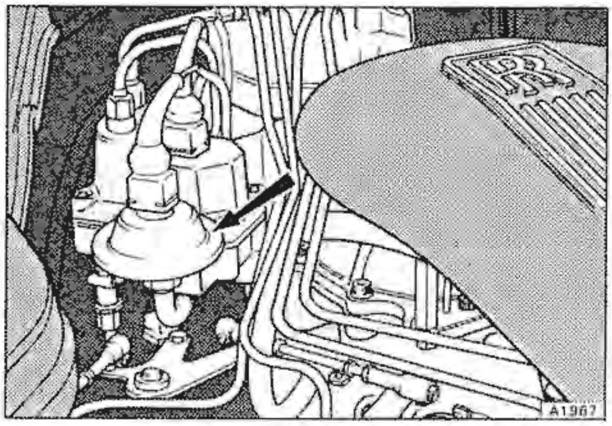

Fig. B2-16 Acceleration enrichment switch

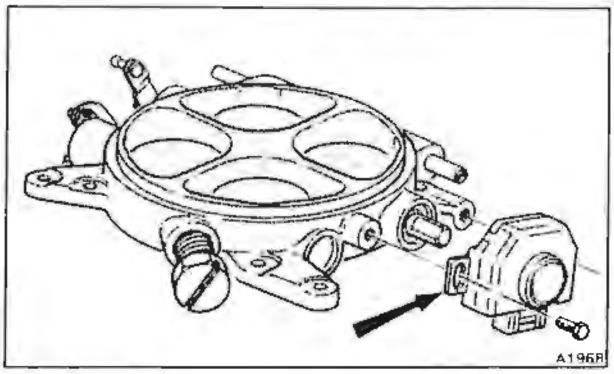

Fig. B2-17 Throttle position switch

To prevent this, a valve is fitted inside the fuel distributor between the primary circuit and the return line.

During all modes of operation, primary circuit pressure holds the valve closed. However, after the engine has been switched off the primary circuit pressure drops and the spring loaded anti-suction valve opens to allow fuel to flow from the return line into the primary circuit. This prevents a depression forming above the control piston.

Acceleration enrichment switch (see fig. B2-16)
Fitted to cars with a lambda control system.

During rapid acceleration, when the engine is cold an extra rich air/fuel mixture is required to preserve good driveability and safety when overtaking.

These requirements are fulfilled by an acceleration enrichment switch that is connected electrically to the ECU (via a thermal switch mounted in the thermostat housing) and by a vacuum hose to the induction manifold.

Inside the acceleration enrichment switch are two electrical contacts. One of the contacts is attached to a spring loaded diaphragm that has a small bleed hole.

Under normal driving conditions the induction manifold vacuum signal acts on the diaphragm, overcomes the spring and breaks the electrical signals.

If the throttles are opened quickly, the induction manifold signal decreases rapidly, the spring returns the diaphragm and makes the electrical contacts.

The electrical signal is conveyed to the ECU which then switches to provide the necessary rich mixture.

Acceleration enrichment is no longer required once the engine has warmed-up. Therefore, at a predetermined coolant temperature the thermal switch contacts break to inhibit the system.

Throttle position switch (see fig. B2-17)
This switch is situated on the side of the throttle body.

The primary throttle spindle activates the switch and changes the fuel injection system from the 'closed loop' operating mode when the throttle is opened wide.

Warm-up regulator (see fig. B2-18)
The purpose of the warm-up regulator is to increase the control pressure as the engine warms-up so that at normal operating temperature full control pressure is exerted on the end of the control piston.

The unit is operated by a bi-metal strip which in cold conditions acts against the delivery valve spring and so determines the control pressure. When the engine is started, this bi-metal strip is electrically heated and releases the delivery valve spring which in turn allows the spring pressure to close the fuel passage and increase the control pressure.

On cars fitted with a lambda control system the warm-up regulator assembly also incorporates an aneroid cell which slightly adjusts the control pressure for mixture compensation at high altitudes.

The warm-up regulator is located so that it will assume the temperature of the engine, this ensures that the mixture is not over enriched when starting a partially warmed-up engine.

Auxiliary air valve (see fig. B2-19)
When the engine is cold the auxiliary air valve supplies a larger volume of air to the engine than is dictated by the position of the throttle butterfly valve. The air passes through a hole in a pivoted blocking plate situated between the inlet and outlet connections. The movement of the blocking plate is dependent upon an electrically heated bi-metal strip.

When starting a cold engine the blocking plate is in the open position. However, as the bi-metal strip warms-up it progressively relaxes its force on the plate, allowing the return spring to pull the plate to the closed position. This reduces the engine speed to the normal idle speed setting.

Thermal time switch (see fig. B2-20)
The thermal time switch limits the length of time that the cold start injector remains open. During engine cranking the heating coil inside the switch causes the bi-metal contact to open which in turn, switches off the cold start injector.

The switch is mounted in the thermostat housing and inhibits operation of the cold start injector above a predetermined coolant temperature.

Electrical circuit and System warning device

Electrical circuit (see figs. B2-21 and B2-22)
The electrical components associated with the fuel injection system comprise the following main circuits.
Engine running sensor and fuel pump inhibit.
Cold start injector and thermal time switch.
Pressure control valve, auxiliary air valve, and warm-up regulator.
Electronic control unit and oxygen sensor.

Engine running sensor and fuel pump inhibit
(see figs. B2-21 and B2-22)
The engine running sensor is located adjacent to the fuel injection system electronic control unit under the facia.

The purpose of the engine running sensor is to inhibit the supply of power to the fuel pump unless the engine is running. There is however, one by-pass to the circuit which allows the fuel pump to operate when the engine is being 'cranked' by the starter motor. A relay within the engine running sensor assembly provides the means of switching on or off the power supply to the fuel pump.

The supply to the fuel pump is along the pink cable from the fuel injection system fuse to the 'engine running' sensor and then out to the pump via the white/pink cable. The engine running sensor circuit is fed via the ignition fuse and the white cable. It is earthed through the black cable. When the engine is being cranked, a 12 volt feed on the brown/black cable causes the relay in the sensor to be 'pulled in' and thus the fuel pump is switched on. Once the engine is running the ignition pulses from the coil primary are fed to the engine running sensor through the white/black wire and the pump relay remains energized.

If the engine speed falls below 150 rev/min the time between the ignition pulses is too long to hold the relay in the energized state and therefore, the power to the fuel pump is switched off.

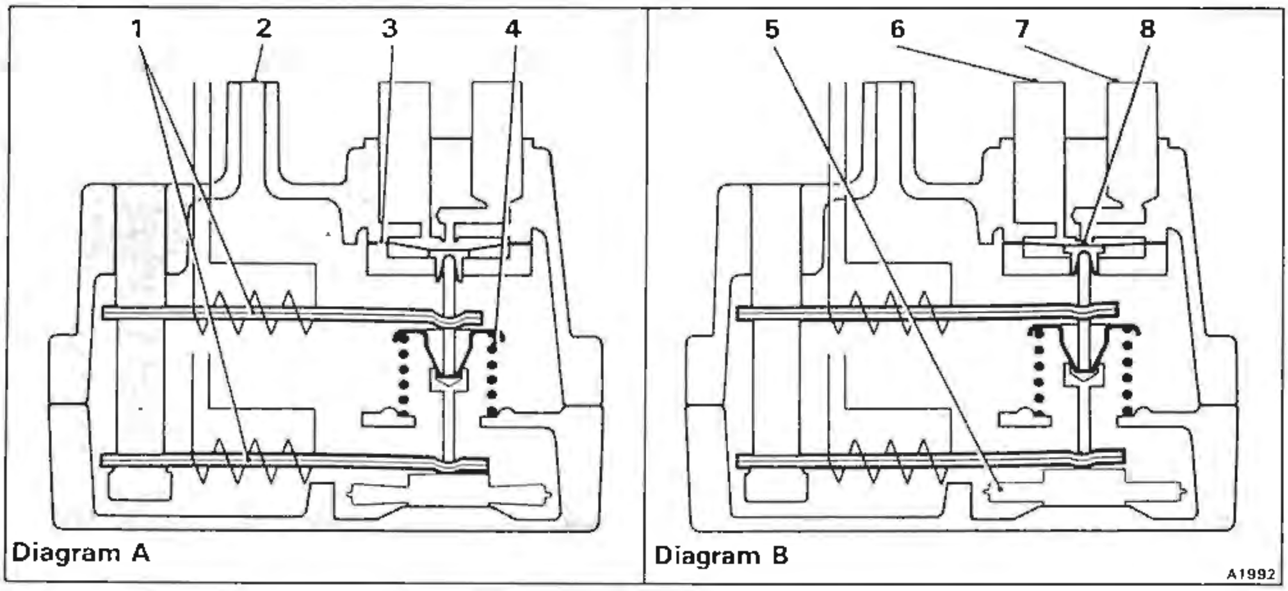

Fig. B2-18 Warm-up regulator
1 Bi-metal strip with heater elements
2 Vent to atmosphere
3 Diaphragm
4 Return spring
5 Aneroid cell
6 Fuel inlet connection
7 Fuel outlet connection
8 Bleed orifice
A Cold engine
B Warm engine

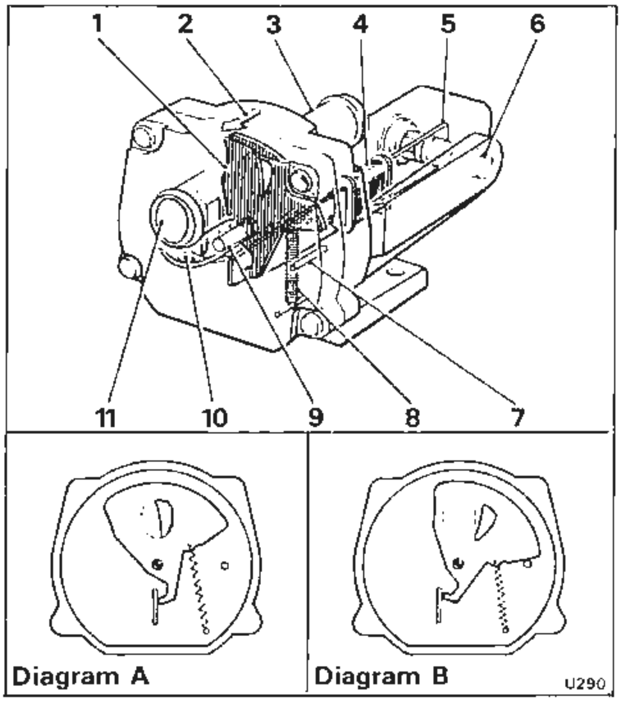

Fig. B2-19 Auxiliary air valve

1 Blocking plate
2 Airflow direction
3 Upstream throttle connection
4 Heating coil
5 Bi-metallic strip
6 Clamping pin
7 Blocking plate limit stop
8 Return spring
9 Pivot pin
10 Heating coil connection block
11 Downstream throttle connection
A Cold engine
B Warm engine

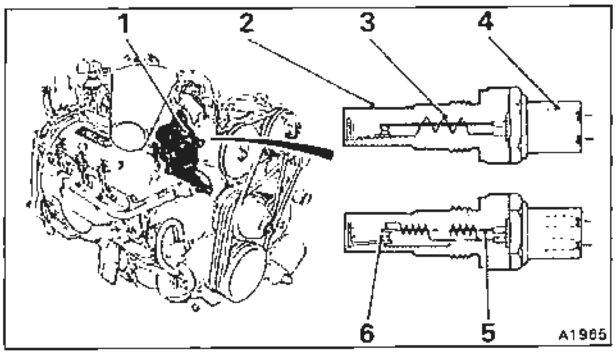

Fig. B2-20 Thermal time switch

1 Thermostat housing
2 Housing
3 Heating coil(s)
4 Plug connector
5 Bi-metallic strip
6 Contacts

Cold start injector and thermal time switch
(see figs. B2-21 and B2-22)
When the engine is being 'cranked' (i.e. the key in the switchbox is held in the START position) power will be supplied via the white/red cable from the starter relay to the thermal time switch, situated in the thermostat housing and the cold start injector. The injector will therefore, operate whenever the engine is being 'cranked', unless the earth is interrupted by the thermal time switch due to either the temperature of engine coolant or the length of operating time.

System warning device (see fig. B2-22)
Fitted to cars with a lambda control system (except cars produced to the Japanese specification).

Failure of the oxygen sensor is detected by the electronic control unit which relies upon the output of the sensor for 'closed loop control'. Failure will cause the system to change to the 'open loop control' and in addition, illuminate the warning lamp bulb on the facia to indicate the need for maintenance.

The warning lamp may illuminate when the engine is being cranked but should extinguish soon after the engine starts. **The lamp will however, remain illuminated until the oxygen sensor reaches it normal operating temperature.**

Modes of operation

Engine warm-up

During the warm-up period two basic compensations are necessary.

The first compensation is for fuel condensation losses on the cold walls of the combustion chamber and inlet manifold. The second compensation is for power lost due to increased mechanical friction.

The compensation for condensation losses is achieved by increasing the fuel flow to the injectors. The power lost is overcome by feeding a larger volume of air into the engine than is dictated by the position of the throttle butterflies.

Prior to the engine starting the control piston is in its lowest position. However, once the air sensor plate is moved downwards by the force of the intake air, the control piston will be moved upwards in the barrel of the fuel distributor.

The control piston is allowed to move further up the barrel of the distributor (for a given volume of intake air), because the control pressure acting against the upward movement of the piston, has been reduced by the action of the warm-up regulator.

The extra movement of the control piston increases the opening at the fuel metering slits and allows more fuel to flow to the injectors.

As the bi-metals in the warm-up regulator and the auxiliary air valve are heated they alter the characteristics of their respective components. The warm-up regulator gradually closes the return line to the fuel tank which therefore, increases control pressure and restricts the movement of the control piston in the fuel distributor. This action limits the opening of the fuel metering slits, reduces the fuel flowing to the injectors, and weakens the mixture.

The bi-metal of the auxiliary air valve progressively relaxes its force on the blocking plate, allowing the return spring to pull the plate to its closed position. This reduces the engine idling speed to its normal setting.

Engine idle speed

When the engine attains normal operating temperature it will adopt its normal idle speed. This is initially set during the manufacture of the vehicle by adjusting screws that act directly on the throttle mechanism. The screws are then made tamperproof to prevent further adjustment.

After the engine has settled or 'run-in' minor corrections to the idle speed setting can be achieved by bleeding air around the throttle butterflies, using the bleed screw situated on the side of the throttle body. This bleed screw has a limited range of adjustment.

The idle mixture is controlled by an adjusting screw which acts directly onto the air sensor plate lever, altering its position relative to the control piston. Turning the screw will either raise or lower the control piston for a given idle speed position of the air sensor plate, this will either richen or weaken the idle mixture.

Note The idle mixture is pre-set at the factory and sealed. No further adjustment should be necessary.

When the transmission selector is moved from the neutral position, the additional load of the transmission would normally reduce the idle speed. This is overcome by the idle speed control solenoid. This solenoid allows air to by-pass the throttle plates, thereby restoring the idle speed to the optimum setting.

Engine part load operation

As the engine speed and load are increased the air

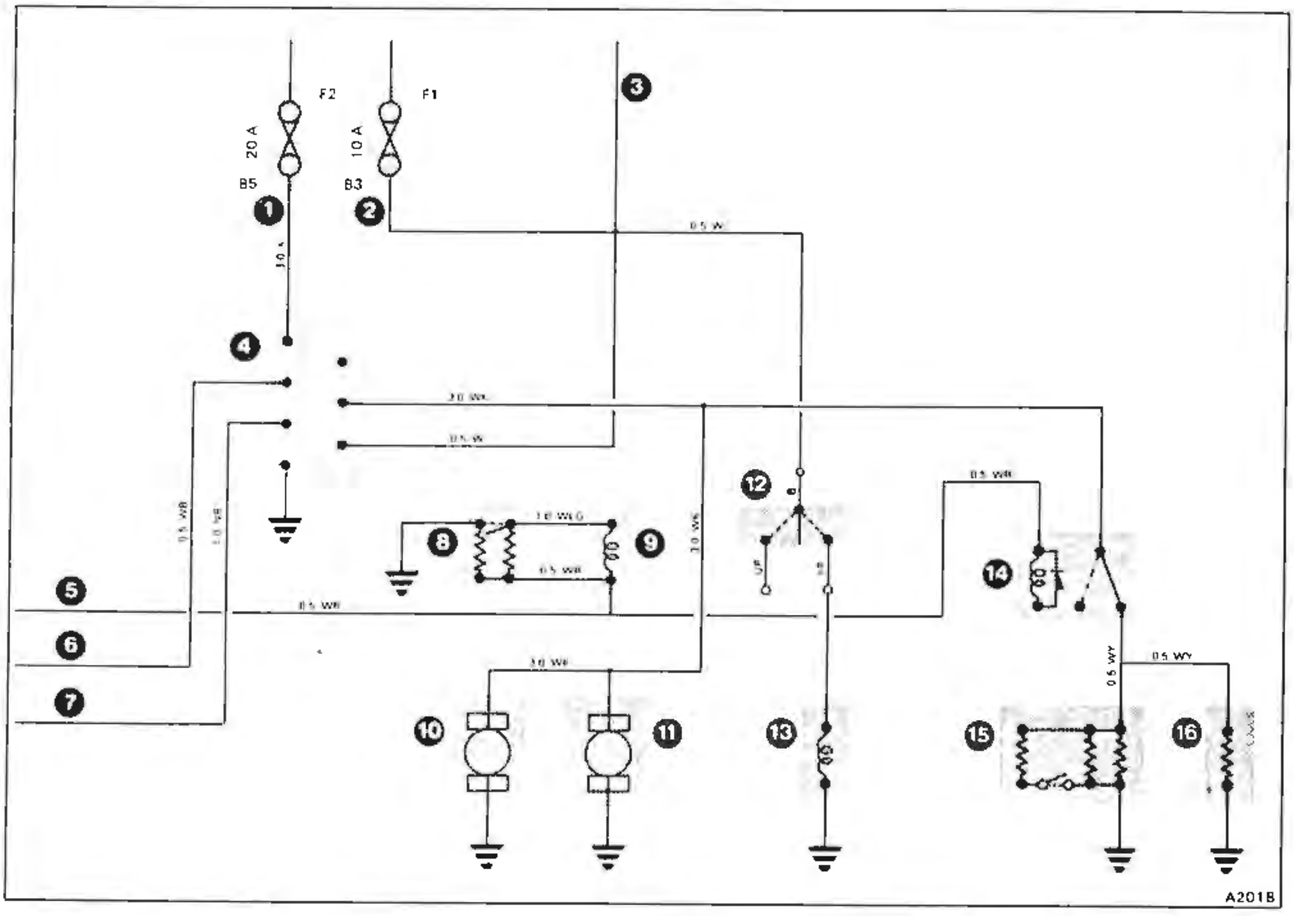

Fig. B2-21 Theoretical wiring diagram (cars not fitted with a catalytic converter)

1 Fuel injection system fuse
2 Ignition, starter, and fuel pump fuse
3 To alternator
4 Engine running sensor
5 From starter relay
6 From ignition coil
7 From starter
8 Thermal time switch
9 Cold start injector
10 Fuel pump
11 Fuel pre-pump
12 Throttle position switch
13 Kick-down solenoid
14 Heaters inhibit relay
15 Warm-up regulator
16 Auxiliary air valve

sensor plate is progressively forced downwards by the increased flow of intake air.

The downward movement of the sensor plate is transmitted via the sensor lever, to the control piston. The control piston is raised accordingly in the barrel of the fuel distributor, allowing additional fuel to pass through the metering slits.

The diaphragm in each of the differential pressure valves responds to this additional fuel flow by deflecting further away from the injection line outlet. This allows more fuel to flow to the injectors.

Engine full load operation

Under full load conditions the air sensor plate exhibits maximum deflection and the control piston is at its highest position in the barrel of the fuel distributor. This gives the largest openings of the metering slits.

The diaphragm in each differential pressure valve is deflected to its furthest point away from the outlet tube to the injectors, allowing maximum fuel flow.

Due to the action of a throttle position switch actuated by the primary throttle spindle, the electronic control unit changes to the internal mode, thus

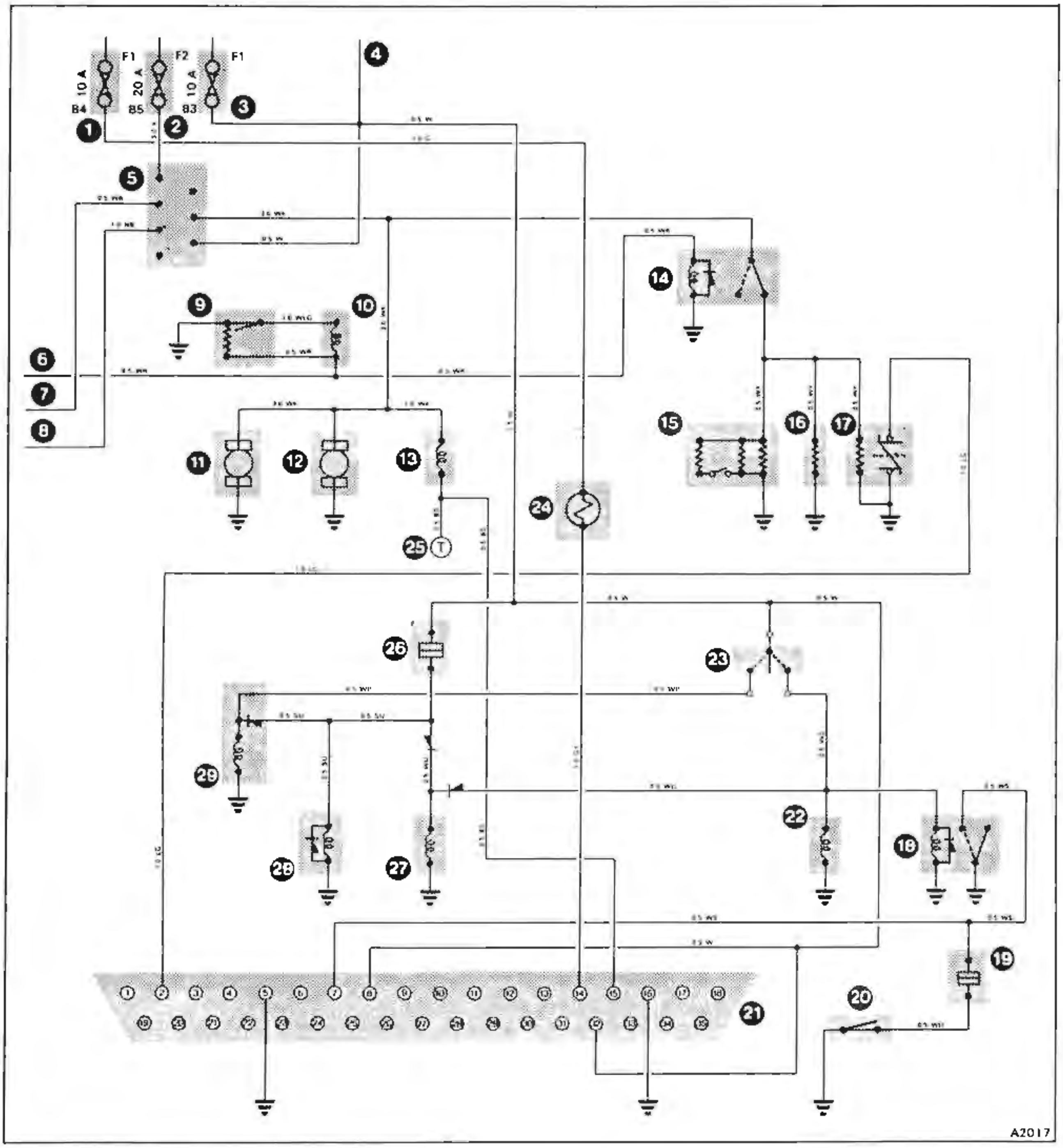

Fig. B2-22 Theoretical wiring diagram (cars fitted with a catalytic converter)

Key to fig. B2-22 Theoretical wiring diagram (cars fitted with a catalytic converter)

1	Instruments and warning lamps fuse
2	Fuel injection system fuse
3	Ignition, starter, and fuel pump fuse
4	To alternator
5	Engine running sensor
6	From starter relay
7	From ignition coil
8	From starter
9	Thermal time switch
10	Cold start injector
11	Fuel pump
12	Fuel pre-pump
13	Pressure control valve
14	Heaters inhibit relay
15	Warm-up regulator
16	Auxiliary air valve
17	Oxygen sensor and heater
18	Kick-down relay
19	Acceleration enrichment temperature switch
20	Acceleration enrichment switch
21	Fuel injection electronic control unit
22	Kick-down solenoid
23	Throttle position switch
24	Oxygen sensor warning lamp (other than Japan)
25	Test connection
26	Emission control temperature switch
27	Exhaust gas recirculation solenoid
28	Air diverter valve
29	Evaporative loss control solenoid

blocking the 'closed loop' system and providing additional enrichment by modifying the fixed signal to the pressure control valve.

Workshop safety precautions

General

Always ensure that the vehicle parking brake is firmly applied, the gear range selector lever is in the park position and the gearbox isolator fuse is removed from the fuseboard.

A number of the nuts, bolts, and setscrews used in the fuel injection system are dimensioned to the metric system, it is important therefore, that when new parts become necessary the correct replacements are obtained and fitted.

Fire

Fuel is highly flammable, therefore great care must be exercised whenever the fuel system is opened (i.e. pipes or unions disturbed) or the fuel is drained. Always ensure that 'no smoking' signs and foam, dry powder, or CO_2 (carbon dioxide) fire extinguishers are placed in the vicinity of the vehicle.

Always ensure that the battery is disconnected before opening any fuel lines.

If the fuel is to be drained from the tank, ensure that it is siphoned into a suitable covered container.

Fuel pressure

The fuel injection system contains fuel that may be under high pressure approximately 5,2 bar to 5,8 bar (75.4 lbf/in^2 to 84.1 lbf/in^2). Therefore, to reduce the risk of possible injury and fire, always ensure that the system is depressurized by one of the following methods before commencing any work that will entail opening the system.

1. Clean the inlet connection to the fuel filter. Wrap an absorbent cloth around the joint and carefully slacken the pipe nut to release any pressurized fuel from the system. Tighten the pipe nut.
2. Allow the pressure to fall naturally by switching off the engine and allowing the vehicle to stand for four hours before opening the system.

Health risk

Fuel may contain up to 5% of benzene as an anti-knock additive. Benzene is extremely injurious to health (being carcinogenic) therefore, **all contact should be kept to an absolute minimum, particularly inhalation.**

Fuel has a sufficient high vapour pressure to allow a hazardous build-up of vapour in poorly ventilated areas. Fuel vapour is an irritant to the eyes and lungs, if high concentrations are inhaled it may cause nausea, headache, and depression. Liquid fuel is an irritant to the eyes and skin and may cause dermatitis following prolonged or repeated contact.

When it becomes necessary to carry out work involving the risk of contact with fuel, particularly for prolonged periods, it is advisable to wear protective clothing including safety goggles, gloves, and aprons. Any work should be carried out in a well ventilated area.

If there is contact with fuel the following emergency treatment is advised.

Ingestion (swallowing)

Do not induce vomiting. Give the patient milk to drink (if none is available water can be given). The main hazard after swallowing fuel is that some of the liquid may get into the lungs. Send the patient to hospital immediately.

Eyes

Wash with a good supply of clean water for at least 10 minutes.

Skin contact

Immediately drench the effected parts of the skin with water. Remove contaminated clothing and then wash all contaminated skin with soap and water.

Inhalation (breathing in vapour)

Move the patient into the fresh air. Keep the patient warm and at rest. If there is loss of consciousness give artificial respiration. Send the patient to hospital.

Cleanliness

It is extremely important to ensure maximum cleanliness whenever work is carried out on the system. The following points should always be observed.

	Symptom															
Possible cause	Engine does not start or starts poorly from cold	Engine does not start or starts poorly when warm	Irregular idle during warm-up	Irregular idle when warm	Engine will not accelerate	Engine misfires when operating under high load	Insufficient power	Engine 'runs on' after being switched off	Excessive fuel consumption	Flat spot during acceleration	CO concentration too high (open loop)	CO concentration too low (open loop)	Idle speed too high	Idle speed too low	Engine starts but immediately stops	**Refer to workshop procedure**
Vacuum system leaks	●	●	●	●		●				●		●	●			1
Metering unit lever sticking	●	●	●	●	●		●			●	●	●				2
Incorrect position of air flow sensor plate		●		●	●	●	●		●	●	●					3
Incorrect operation of the auxiliary air valve	●	●	●										●	●		4
Faulty primary fuel circuit	●	●				●	●			●					●	5
Incorrect control pressure		●														6
Leaks in the fuel system	●	●	●	●		●	●		●	●	●				●	7
Faulty injectors		●	●			●										8
Unequal fuel delivery from distributor			●	●			●			●						9
Incorrect idle speed adjustment		●	●	●									●	●		10
Incorrect idle mixture strength		●	●	●							●	●				11
Throttle plates not opening correctly							●									12
Blocked air filter or ducting	●		●	●			●									13
Faulty cold start system	●	●									●					14
Faulty engine running sensor	●	●						●							●	15
Fuel accumulator diaphragm burst	●	●				●	●									16
Incorrect operation of idle by-pass solenoid														●		17
Pressure control valve damper failure	●	●	●	●		●			●		●					18
Faulty acceleration enrichment switch							●		●		●					19
Faulty exhaust gas recirculation system,refer to Chapter F	●	●														
Faulty 'closed loop' system – see appropriate flow chart			●				●		●							

Workshop procedures 1 to 17 inclusive apply to all cars. A combination of the remainder also apply to cars produced to an Australian, Japanese, or North America specification.

A2162

Fig. B2-23 Basic K-Jetronic fault diagnosis chart

Figure B2-24

'Closed loop' system – fault diagnosis chart

Sheet 1 of 2

Printed in England

Important
Before commencing work, run the engine for three minutes, switch off the ignition and allow to cool.

Ensure that
1. The test meter is connected (see illustrations)
2. The starter relay has been removed
3. The electrical feed to the cold start injector has been disconnected
4. The ignition is switched on

Hold the ignition key in the crank position for all the following operations

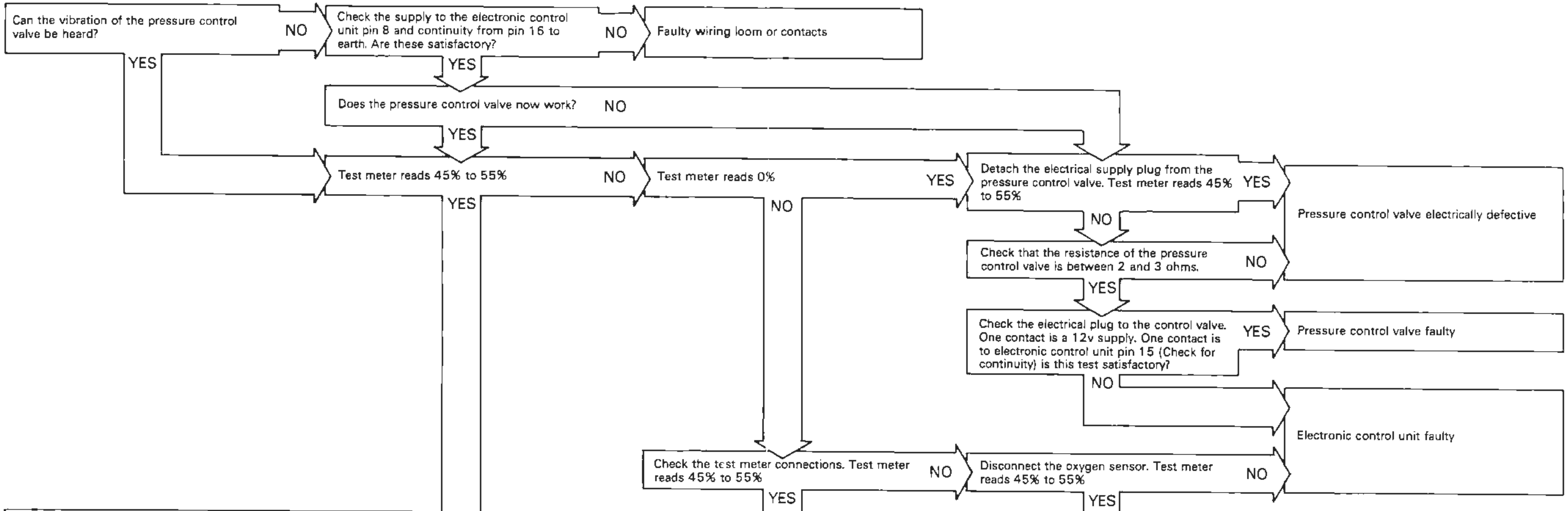

Can the vibration of the pressure control valve be heard?

Check the supply to the electronic control unit pin 8 and continuity from pin 16 to earth. Are these satisfactory?

Faulty wiring loom or contacts

Does the pressure control valve now work?

Test meter reads 45% to 55%

Test meter reads 0%

Detach the electrical supply plug from the pressure control valve. Test meter reads 45% to 55%

Pressure control valve electrically defective

Check that the resistance of the pressure control valve is between 2 and 3 ohms.

Check the electrical plug to the control valve. One contact is a 12v supply. One contact is to electronic control unit pin 15 (Check for continuity) is this test satisfactory?

Pressure control valve faulty

Electronic control unit faulty

Check the test meter connections. Test meter reads 45% to 55%

Disconnect the oxygen sensor. Test meter reads 45% to 55%

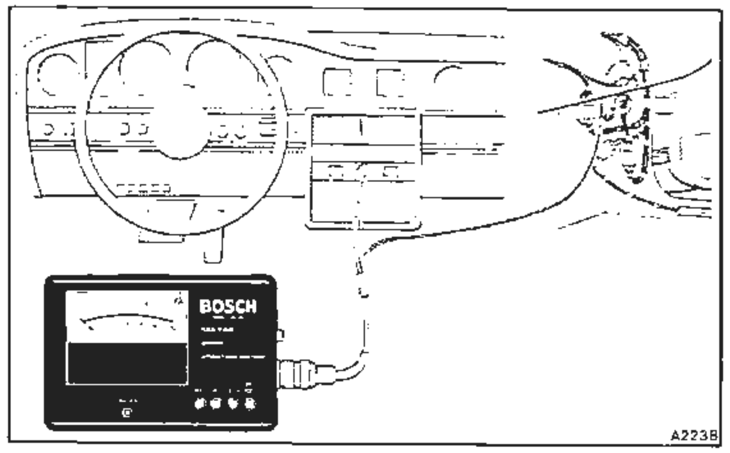

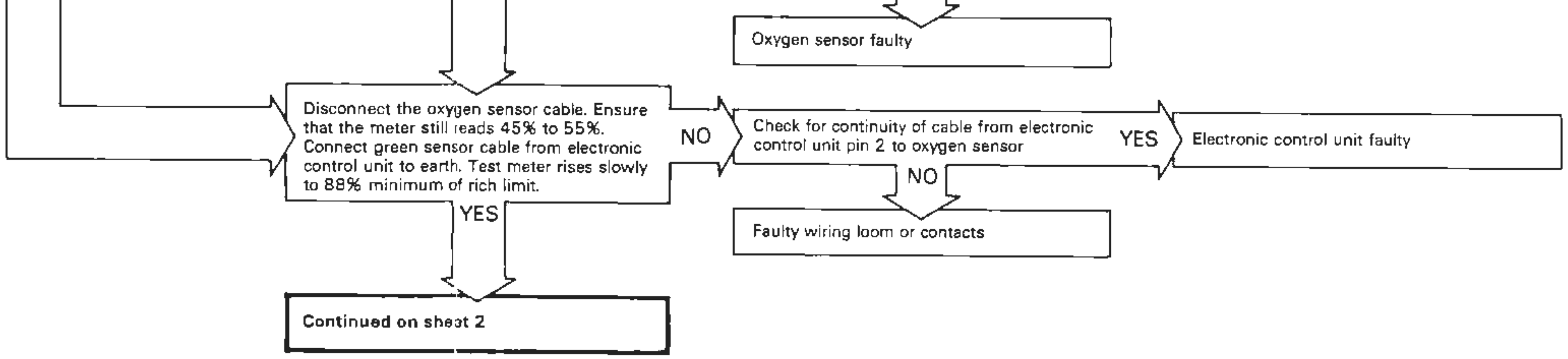

Oxygen sensor faulty

Disconnect the oxygen sensor cable. Ensure that the meter still reads 45% to 55%. Connect green sensor cable from electronic control unit to earth. Test meter rises slowly to 88% minimum of rich limit.

Check for continuity of cable from electronic control unit pin 2 to oxygen sensor

Electronic control unit faulty

Faulty wiring loom or contacts

Continued on sheet 2

Figure B2-24

'Closed loop' system – fault diagnosis chart
Sheet 2 of 2

Printed in England

Continued from sheet 1

Fully depress the accelerator pedal. Test meter reads 60% to 70%

NO

Ensure the throttle position switch is set correctly

NO

Reset the throttle position switch

YES

With throttles fully open. Check for cable continuity from electronic control unit pin 7 to vehicle earth

NO

Faulty wiring loom or contacts

YES

YES

Connect the 2 volt supply on test meter to the disconnected oxygen sensor cable (feed to the electronic control unit)
See Ⓐ in the illustration
Test meter reads less than 20%

NO

Electronic control unit faulty

YES

With the oxygen sensor cable still disconnected, connect a CO analyzer into the exhaust pipe sample tapping. Run the engine until normal operating temperature is attained. Check that the idle CO is between 0.5% and 0.7% at 580 rev/min in park

NO

Carry out tests to basic K-Jetronic fuel injection system

YES

Connect the oxygen sensor cable
Is the CO value unchanged?

NO

Increase the engine speed to approximately 1500 rev/min the CO reading should fall below the idle speed value

NO

Disconnect the oxygen sensor cable
Does the engine idle speed become regular and increase?

NO

Pressure control valve has failed mechanically

YES

Check the engine idle speed and adjust if necessary

YES

Check for exhaust gas leaks at the exhaust manifolds and oxygen sensor

YES

Oxygen sensor is faulty

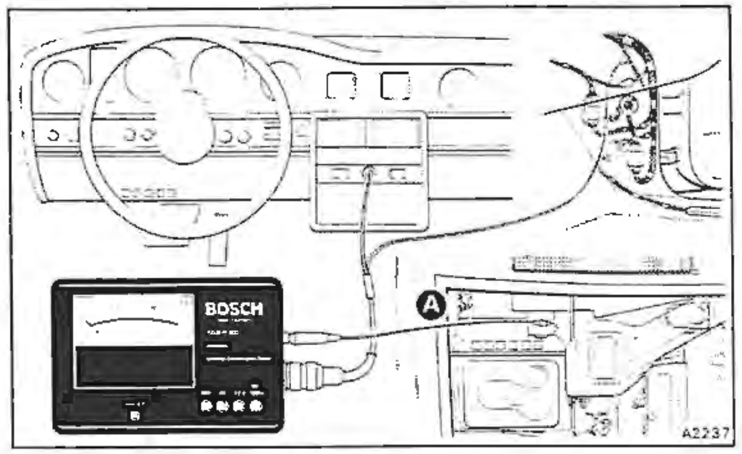

1. To prevent the ingress of dirt, always clean the area around a connection before dismantling a joint.
2. Having disconnected a joint (either fuel or air) always blank off any open connections as soon as possible.
3. Any components that require cleaning should be washed in clean fuel and dried, using compressed air.
4. If it is necessary to use a cloth when working on the system, ensure that it is lint-free.

Fault diagnosis

This fault diagnosis section includes.

Basic system test procedure.

Electrical and Electronic components fault diagnosis.

Mechanical components fault diagnosis.

It is important that fault finding is carried out in the sequence given. Electrical and electronic faults can exhibit symptoms similar to mechanical faults. Therefore an incorrect diagnosis may be made which could result in both lengthy and costly repairs.

Often, a mechanical fault has sufficiently well defined symptoms to enable a very rapid diagnosis to be made.

The **basic fault finding procedure** is as follows, noting that any faults found in one system should be rectified before moving on to the next stage of the procedure.

1. Carry out a compression test on the engine cylinders (to inhibit the operation of the system during this test, remove the fuel injection fuse).
2. Check that the ignition system is operating satisfactorily (refer to Chapter E).
3. Ensure that the vacuum system is free from leaks (see fig. B2-23).
4. Ensure that the E.G.R. system is free from leaks (refer to Chapter F).
5. Ensure that all auxiliary air hoses and crankcase breather system hoses are free from leaks.
6. Check that the solenoid valves and their thermal switches are working correctly.
7. Test the basic K-Jetronic system for correct operation (see fig. B2-23).
8. Test the 'closed loop' system for correct operation (refer to Fault diagnosis flow chart).

Note Procedures 1, 2, 3, 5, and 7 apply to all cars. In addition, a combination of procedures 4, 6, and 8 also apply to cars produced to an Australian, Japanese, or North American specification.

Before commencing any fault diagnosis or work on the fuel injection system ensure that the workshop safety precautions are fully understood.

During manufacture, the components of the fuel injection system are precisely adjusted in order to comply with the relevant emission control regulations. Therefore, alterations to any of the settings should not normally be necessary.

Diagnosing and correcting faults

The workshop procedure number refers to the fault diagnosis chart for the basic K-Jetronic system given in figure B2-23.

Before carrying out any tests, ensure that the battery is in a fully charged condition.

It should be noted that all components of the system (except the injectors) can be tested on the vehicle.

Procedure 1 Induction system air leaks

Visually check all vacuum hoses, pipes, and clips for damage or looseness that may allow an air leak into the induction system.

Check the entire induction system for air leaks with the engine running. Use a suitable length of rubber hose as a listening aid. The leak will often be heard as a high pitched hiss or whistle.

Procedure 2 Metering control unit lever sticking

1. Ensure that the engine temperature is above 20°C (68°F).
2. Remove the air intake elbow from the inlet to the control unit.
3. Apply control pressure to the control piston in the fuel distributor for approximately 10 seconds (refer to page B2-32).
4. Press the air sensor plate slowly downwards to its maximum open position. The resistance to this movement should be uniform over the whole range of travel. Allow the air sensor plate to return to its rest position and repeat the operation.

If the resistance to the air sensor plate movement is uniform over the whole range of travel, the metering unit is not sticking.

Note Whenever the airflow sensor plate is depressed fuel will be sprayed into the engine. Therefore, the sensor plate should only be depressed the minimum number of times to carry out this operation.

5. Should the resistance to air sensor plate movement be greater in the rest position, it could be due to the plate being either out of position or bent.
6. If the condition described in Operation 5 is confirmed, depressurize the fuel system (refer to page B2-15). Then, press the plate fully downwards and allow it to spring back to the rest position. It should return freely and bounce downwards slightly from the spring loaded stop at least once.
7. Should a resistance be confirmed in Operation 6, remove the air sensor plate and repeat the operation. If this alleviates the resistance, the air sensor plate is fouling the sides of the air funnel and should be centralized (refer to Procedure 3) or the air funnel may be deformed.
8. If there is still a resistance to the movement of the lever, it could be due to contamination within the fuel distributor barrel or occasional binding in the lever mechanism.
9. Contamination within the fuel distributor can be checked by separating the fuel distributor from the control unit and withdrawing the control piston for inspection.

Remove the screws situated on top of the fuel distributor. Lift off the fuel distributor (resistance will be felt due to the rubber sealing ring), bend back the piston retaining tabs and withdraw the piston.

Handle the control piston with care to ensure that it does not become damaged.

Do not handle the control piston on its working surfaces.

10. Thoroughly clean the control piston in clean fuel.
11. Fit the control piston to the fuel distributor. Ensure that the spring is fitted above the piston.

Bend the retaining tabs so that the piston cannot fall out. Ensure that the rubber sealing ring situated between the fuel distributor and the mixture control unit is in good condition. Lubricate the rubber sealing ring with suitable grease and fit the distributor, ensuring that the retaining screws are evenly tightened.

If a resistance is still noticeable, a new fuel distributor assembly should be fitted to the mixture control unit.

12. After fitting the fuel distributor check the idle mixture strength.

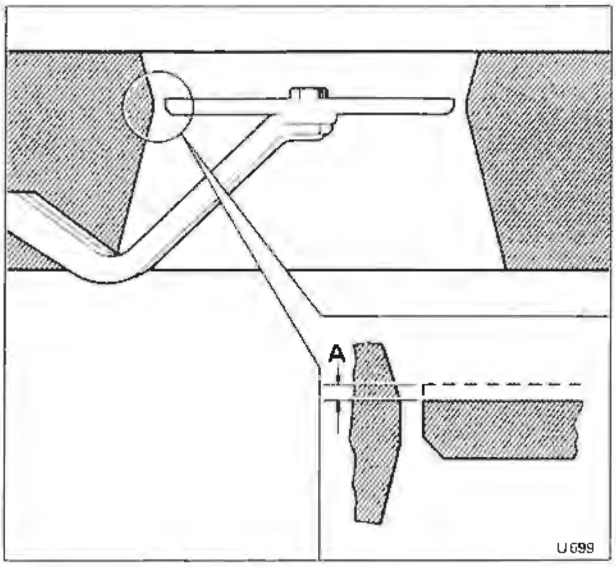

Fig. B2-25 Checking the height of the air flow sensor plate
A 0,5 mm (0.020 in)

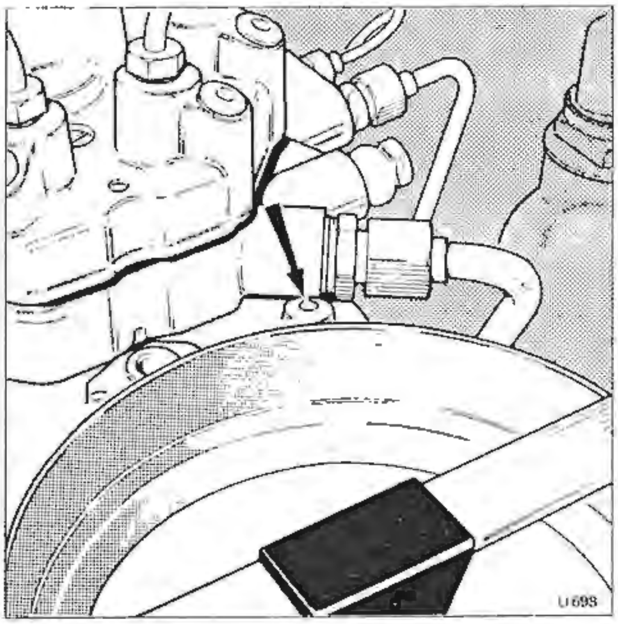

Fig. B2-26 Height adjustment for the air flow sensor plate

Procedure 3 Positioning the air flow sensor plate

1. Remove the air inlet elbow from above the air sensor plate.
2. Check that the sensor plate is flat and that it will pass through the narrowest part of the air funnel without fouling.
3. If necessary, loosen the plate securing screw.
4. Insert the guide ring RH 9609 whilst retaining the sensor plate in the zero movement position. This will prevent the sensor plate from being forced downwards as the centring guide ring is being installed.
5. With the centring guide ring in position, tighten the retaining screw. Carefully remove the centring guide ring.
6. Apply control pressure to the control piston in the fuel distributor for approximately 10 seconds (refer to page B2-32).
7. The upper edge of the sensor plate adjacent to the fuel distributor, should be flush with the beginning of the upper cone as shown in figure B2-25.

Note It is permissible to leave the top edge of the air sensor plate protruding into the upper cone by a maximum of 0,5 mm (0.020 in). The lower edge of the plate (which is chamfered) must not project upwards outside the short cylindrical part of the air funnel, at any point on its circumference.

8. If the air sensor plate is positioned too high, remove the fuel distributor and carefully tap the guide pin lower using a mandrel and a small hammer (see fig. B2-26).

Note This adjustment must be made very carefully, ensuring that the guide pin is not driven too low. Repeated adjustment can loosen the guide pin. Serious damage to the engine could result if the pin should fall out.

Procedure 4 Checking the operation of the auxiliary air valve

1. Ensure that the engine is cold.
2. Disconnect the electrical plug at the auxiliary air valve.
3. Disconnect the inlet and outlet rubber hoses from the auxiliary air valve.
4. Using a flashlight and mirror, observe the position of the hole in the blocking plate (see fig. B2-27). It should be partially uncovered. If the blocking plate completely closes the air passage, fit a new auxiliary air valve.
5. If the air passage way is open, connect the electrical plug to the auxiliary air valve.
6. Apply electrical power to the heater in the auxiliary air valve (refer to page B2-33).
7. The air passage through the valve should be completely closed within four to five minutes.

8. If the blocking plate does not close, check the electrical power supply to the auxiliary air valve. The minimum voltage at the connector should be 11.5 volts.
9. Finally, using an ohmmeter, check the heating coil in the auxiliary air valve for an open circuit. Should the coil prove faulty, fit a new air valve.

Procedure 5 Checking the operation of the primary fuel circuit

Fuel delivery

1. Fit the pressure tester RH 9612 (Bosch Number KDEP 1034).
2. Open the valve screw(s) on the pressure tester valve block.
3. Disconnect the fuel return line to the fuel tank at the fuel distributor. Using a 'firtree' type nipple and nut (SPM 1390/1), connect one end of an auxiliary fuel return hose to the connection. Hold the other end of the hose in a graduated measuring container capable of holding at least 2 litres (3.5 Imp pt).
4. Disconnect the electrical plug from the warm-up regulator and the auxiliary air valve.
5. Apply electrical power to operate the fuel pump for 30 seconds (refer to page B2-33). At least 1000 ml of fuel should be delivered into the measuring container.
6. If the delivery quantity is satisfactory, check the primary system pressure. However, if the delivery quantity is below the prescribed amount proceed as follows, checking the fuel pump delivery after each operation.
7. Check the voltage at the fuel pump. When the pump is operating this should be 11.5 volts.
8. Check the fuel lines for blockage.
9. Fit a new main fuel filter.
10. Fit a new fuel pump.
11. After establishing that the fuel delivery is correct remove the test equipment.
12. Connect the fuel return pipe to the fuel distributor.

Primary system pressure

To carry out this test, fit the pressure tester RH 9612 (Bosch Number KDEP 1034).

1. Close the valve screw on the pressure tester three-way block. If the valve block has two screws, this is the screw situated adjacent to the warm-up regulator connection.
2. Apply electrical power to operate the fuel pump (refer to page B2-33). The pressure gauge will now show primary system pressure which should be between 5,2 bar and 5,8 bar (75.4 lbf/in^2 and 84.1 lbf/in^2).
3. If the primary system pressure is too low.
a. Check the fuel supply.
b. Check the setting of the pressure regulator and service if necessary.
4. If the primary system pressure is too high.
a. Check for a restriction in the return line to the fuel tank.
b. Check the setting of the pressure regulator and service if necessary.

Procedure 6 Checking the control pressure

Control pressure is determined by the warm-up regulator and governs the basic mixture strength.

The warm-up regulator contains a temperature sensitive bi-metal. Therefore, the control pressure depends upon the warm-up regulator bi-metal temperature.

On cars produced to Australian, Japanese, and North American specifications, the warm-up regulator contains two temperature sensitive bi-metals and an aneroid capsule (see fig. B2-18) which responds to atmospheric pressure.

The control pressure depends upon the warm-up regulator bi-metal temperature and on certain cars it is further influenced by atmospheric pressure (which is reduced with increasing altitude).

Fit the pressure tester RH 9612 (Bosch Number KDEP 1034).

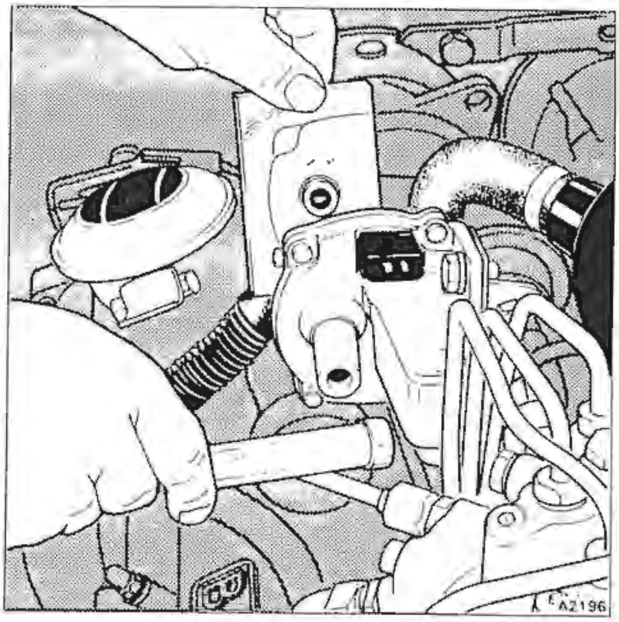

Fig. B2-27 Checking the auxiliary air valve

Cold control pressure

The engine must be cold to enable this test to be properly carried out. The engine must not have been run for at least four hours; **preferably** left overnight.

The ambient temperature at the time of the test must also be known.

1. Disconnect the electrical plug situated on the warm-up regulator.
2. Apply control pressure to the system (refer to page B2-32).
3. Open the valve(s) on the pressure tester valve block. Note that the pressure tester gauge will show cold control pressure.
4. Refer to figure B2-28 for the correct cold control pressure.

Examples of readings for vehicles fitted with altitude compensation are as follows.

If the test site is at sea level the correct control pressure should be within ± 0,2 bar (3 lbf/in^2) of the solid line (corresponding to an atmospheric pressure of 984 millibars).

Example

With an atmospheric pressure of 984 millibars or above and an ambient air temperature of 20°C (68°F), the cold control pressure should be between 2,0 bar and 2,4 bar (29 lbf/in² and 34.8 lbf/in²).

If the test site is at altitude [i.e. above 600 m (1968 ft)], determine the atmospheric pressure at the time of the test. This should be obtained from a local weather station or airport that is at the same altitude, or from a reliable mercury barometer reading taken at the test site.

The control pressure should be within ± 0,25 bar (3.6 lbf/in²) of the value corresponding to the atmospheric pressure.

Example

With an atmospheric pressure of 838 millibars and an ambient air temperature of 20°C (68°F), the cold control pressure should be between 2,45 bar and 2,95 bar (35.5 lbf/in² and 42.8 lbf/in²).

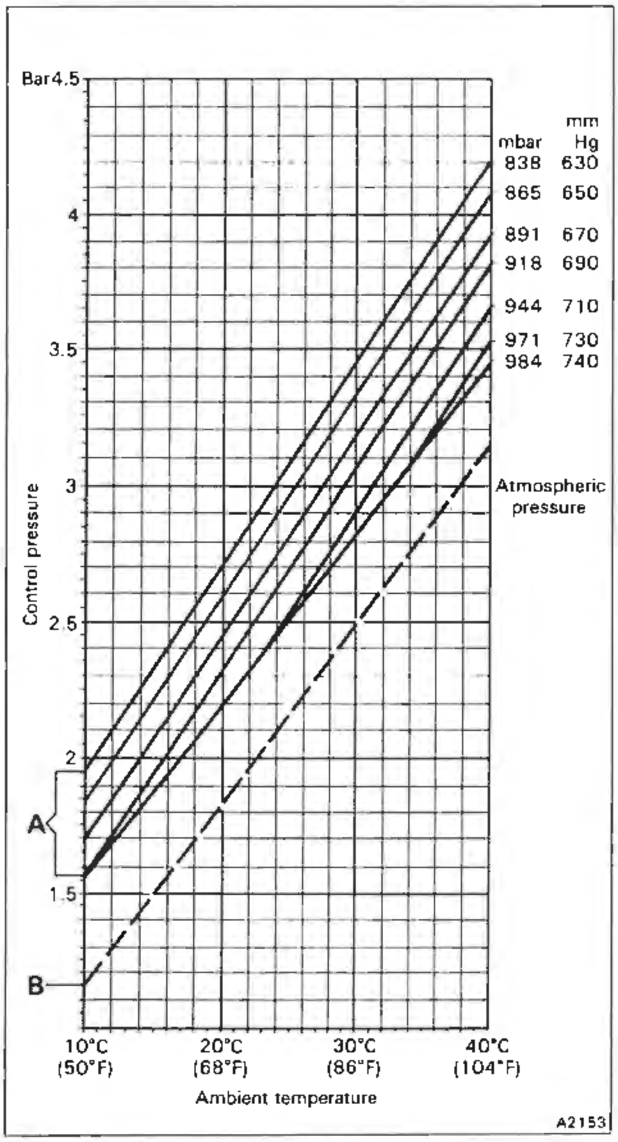

Fig. B2-27 'Cold' control pressure
A Cars with altitude compensation
B Cars without altitude compensation

To carry out a basic functional test on the altitude compensation device at sea level, connect the Mityvac pump RH 12495 to the breather connection on the warm-up regulator and evacuate the body (see fig. B2-29).

Ensure that the control pressure rises as the pressure within the warm-up regulator decreases.

If the cold control pressure is incorrect fit a new warm-up regulator.

Warm control pressure

1. Connect the electrical plug to the warm-up regulator.
2. Apply control pressure to the system (refer to page B2-32).
3. Ensure that the valve(s) on the valve block of the pressure tester is open.
4. The control pressure should begin to rise. When it has stabilized, the warm control pressure should be 3,6 bar (52.2 lbf/in²) ±0,15 bar (±2.2 lbf/in²). This should take no more than one minute at 20°C (68°F).
5. On vehicles produced to an Australian, Japanese, or North American specification (i.e. vehicles fitted with altitude compensation), refer to figure B2-30 for the correct warm control pressure at the corresponding test site altitude.
6. If the pressure is incorrect, check that there is an electrical feed to the warm-up regulator. If the electrical feed is correct the warm-up regulator is faulty and should be replaced.

Procedure 7 Checking the fuel system for leaks

1. Fit the pressure tester RH 9612 (Bosch Number KDEP 1034).

   Ensure that the valve(s) on the pressure tester valve block is open.
2. Ensure that the engine temperature is between 30°C and 50°C (86°F and 122°F).
3. Apply control pressure to the system (refer to page B2-32).
4. Allow one minute for warm control pressure to be registered on the gauge of the pressure tester.
5. Switch off the ignition.
6. Note the time taken for the pressure to fall to zero and compare this time with the data given in figure B2-32.
7. If the pressure drops too quickly, repeat the test with the control pressure circuit disconnected. To carry out this test, close the valve on the pressure tester valve block (adjacent to the warm-up regulator connection on the two valve type) and repeat the test given in Operations 2 to 6 inclusive.

Should the pressure loss now be acceptable, there is a leak either

a. Externally from the control circuit pipes and/or pipe connections.

b. At the push valve situated within the primary system pressure regulator. This indicates that the rubber sealing rings are defective and should be changed.

Should the pressure loss remain outside the acceptable limits, the leak is in the primary fuel circuit and may be due to.

a. The sealing ring in the primary system pressure regulator being defective and indicating that the rubber sealing rings in the assembly should be changed.
b. The cold start injector leaking.
c. A faulty non-return valve in the fuel pump outlet.
d. Leaking accumulator diaphragm.
e. An external leak from one of the fuel system pipes.
f. One or more of the injectors leaking.

If an injector leak is suspected, switch on the ignition to restore the system pressure then slightly depress the air sensor plate. If the pressure reading drops continuously with the sensor plate depressed an injector is leaking. Remove the sparking plugs for inspection, the plug removed from the cylinder having the sticking injector will often be found in a sooty condition.

Procedure 8 Checking the injectors

1. Remove the injectors from the engine.
2. Connect the injector to the test equipment RH 9614 (Bosch Number KDJE 7452), see figure B2-34.

Opening pressure

3. Bleed the discharge tube by moving the operating lever several times with the union slackened. Tighten the union.
4. Check the injector for dirt by operating the lever slowly at approximately one stroke per two seconds, with the valve on the pressure gauge open.

If the pressure does not rise to between 1,0 bar and 1,5 bar (14.5 lbf/in^2 and 21.75 lbf/in^2) the valve of the injector has a bad leak, possibly caused by dirt. Attempt to flush the valve by operating the lever rapidly several times. If the injector valve does not clear, the injector should be discarded.

5. Check the opening pressure of the injector by closing the valve of the test equipment and bleeding the injector by operating the test equipment lever rapidly several times. Open the valve and move the lever slowly at approximately one stroke per two seconds, note the pressure at which the injector begins to spray.

The correct pressure for the injector to commence spraying is between 3,5 bar and 4,1 bar (50.75 lbf/in^2 and 59.45 lbf/in^2). If this is not correct, fit a new injector.

Leakage test

6. Open the valve on the test equipment and slowly operate the lever until the pressure reading is 0,5 bar (7.25 lbf/in^2) below the previously determined opening pressure.
7. Hold this pressure constant by moving the lever.
8. No drops should appear from the injector for the next 15 seconds.

Evaluation of spray and 'chatter' test

9. Operate the lever of the test equipment at one stroke per second, as this is done the valve in the end of the injector should be heard to 'chatter'.

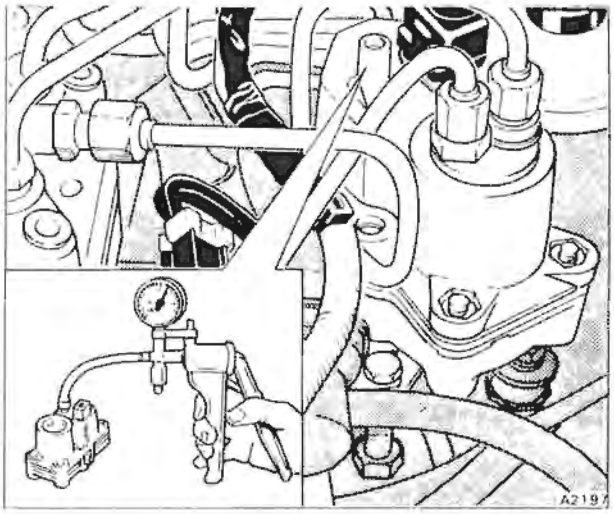

Fig. B2-29 Evacuating the warm-up regulator

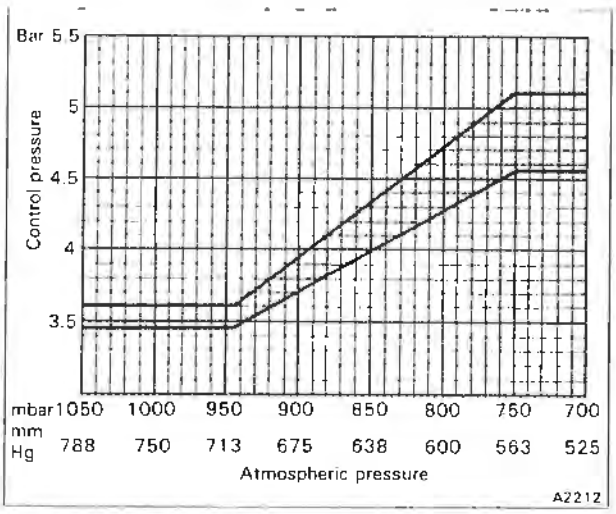

Fig. B2-30 Warm control pressure (vehicles fitted with altitude compensation)

10. The injector should also produce an even spray with an approximate spray angle of 35°. If drops form at the mouth of the injector valve or if the spray is excessively one-sided, the injector should be discarded.

The various spray formations and angles are shown in figure B2-33.

Note It is important that any replacement injectors are tested in the above manner before fitting to the engine.

Procedure 9 Checking the delivery balance of the fuel distributor

1. Fit the delivery quantity comparison tester RH 9613 (Bosch Number KDJE 7455), see figure B2-39.
2. Remove the air intake elbow to reveal the air sensor plate.
3. Apply electrical power to operate the fuel pump (refer to page B2-33).

4. Bleed the test equipment.

5. This test is carried out under simulated idle, part load, and full load conditions as follows.

Note The test equipment rotameter scale may read either ml/min or cm^3/min. Whichever scale is used, the flow figures are identical (i.e. 1 ml/min=1 cm^3/ min).

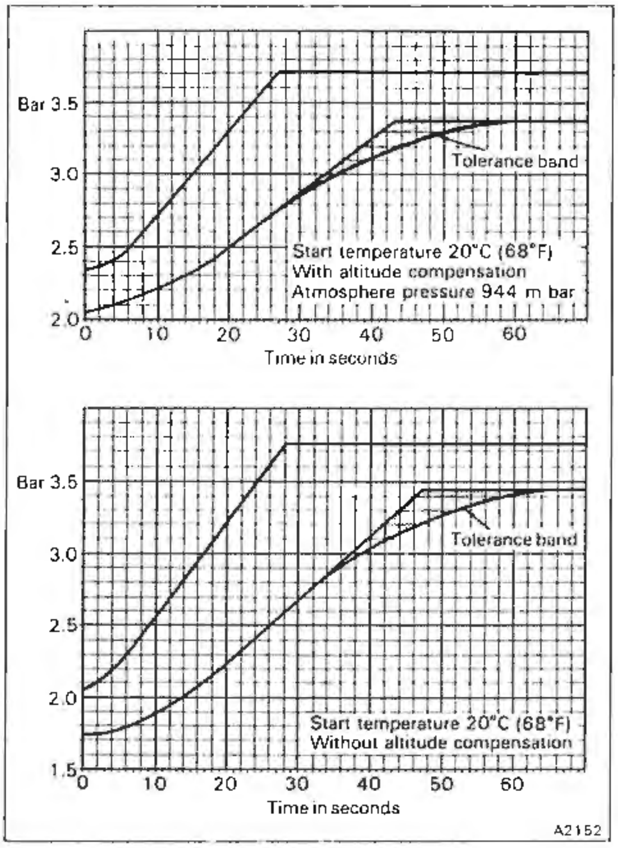

Fig. B2-31 **Time taken from 'cold' to 'warm' control pressure**

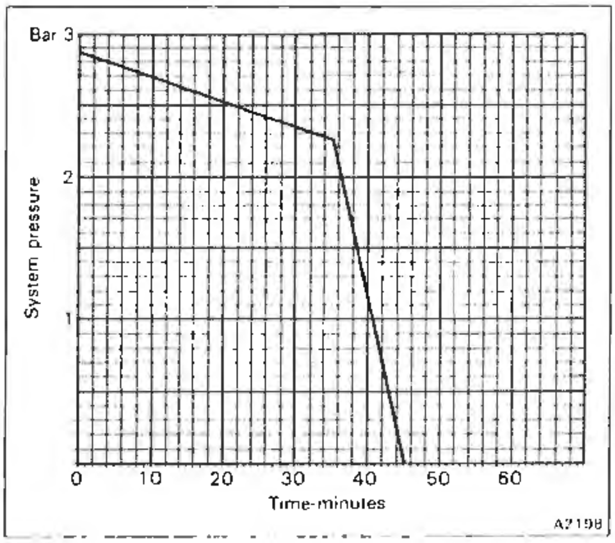

Fig. B2-32 **Fuel system 'leak down'**

Idle conditions

6. Press switch number one on the test equipment and move the air flow sensor plate downwards (using the adjusting device shown in figure B2-35) until the reading on the small rotameter indicates a flow of approximately 6,7 ml/min.

7. Test the remaining outlets and determine which one has the lowest fuel delivery.

8. Press the switch of the outlet with the lowest fuel delivery. Using the adjusting device, adjust the height of the air flow sensor plate until the reading on the rotameter is 6,7 ml/min.

9. Measure the fuel delivery from each outlet, noting that none of them should exceed 7,7 ml/min.

Part load conditions

10. Repeat Operations 6 to 9 inclusive, moving the air flow sensor plate downwards, until a fuel delivery of 20,8 ml/min is measured (on the large rotameter) from the fuel outlet with the lowest delivery.

11. Measure the fuel delivery from each outlet, noting that it should not exceed 22,4 ml/min.

Full load conditions

12. Repeat Operations 6 to 9 inclusive, moving the air flow sensor plate further downwards until a fuel delivery of 94 ml/min is measured from the fuel outlet with the lowest delivery.

13. Measure the fuel delivery from each outlet, noting that it should not exceed 99 ml/min.

If the fuel delivery exceeds the limits quoted, a new fuel distributor should be fitted.

Procedure 10 Checking the engine idle speed

Refer to Idle speed – To set.

Procedure 11 Checking the idle mixture strength

The idle mixture strength should be checked and adjusted in accordance with the instructions given under the heading idle mixture strength – To set.

The idle mixture strength should always be checked if either a new warm-up regulator or fuel distributor have been fitted.

Procedure 12 Checking the operation of the throttle plates

1. Depress the accelerator pedal fully and observe the position of the throttle levers.

2. Ensure that the throttle levers are fully open (i.e. against the stops).

3. Also, ensure that the throttle linkage operates smoothly through both primary and secondary stages.

4. If the throttles do not open fully, or if the linkage does not operate smoothly, the problem should be investigated and corrected as described in Chapter K.

Procedure 13 Checking the air intake filter and ducting for blockage

1. Remove the air filter element.

2. Examine the condition of the element and fit a new one if necessary.
3. Inspect the filter housing assembly. Particular attention should be given to the intake 'scoop' that diverts air from behind the front bumper into the filter housing; ensure that this is not obstructed.
4. Slacken the worm drive clips that secure the flexible hose to the intake elbow on the mixture control unit; ensure that the elbow and ducting are not blocked.
5. Carry out the tests given in the Workshop Procedures 3 and 12.
6. Fit all hoses, clips, and the filter element upon satisfactory completion of the tests.

Procedure 14 Checking the cold start system
When checking the cold start system it is **essential** that the information given in the Workshop safety precautions is observed.

Thermal time switch
1. Withdraw the electrical plug from the thermal time switch.
2. Connect a test lamp between one of the two plug terminals and earth.
3. Switch on the ignition and crank the engine. The bulb of the test lamp should illuminate. Repeat the check on the other plug terminal. If the bulb does not illuminate in either test the electrical connections and wiring of the respective circuit are suspect.
4. Produce a test lead using a Bosch electrical plug and two lengths of cable, each approximately 500 mm (20 in) long.
5. Connect the test cables to the thermal switch via the plug.
6. Refer to figure B2-36 and measure the resistance between.
a. Terminals W and G.
b. Each terminal and the brass body of the switch.
Depending upon the temperature of the switch, the resistance measured should be within the values given in figure B2-36.
7. If the values do not correspond with those given in figure B2-36 fit a new switch.
8. After the test has been satisfactorily carried out, remove the test lead assembly and connect the electrical loom plug.

Cold start injector
9. Detach the electrical plug from the cold start injector.
10. Produce a test lead using a Bosch electrical plug, two lengths of cable and a micro-switch.
11. Remove the cold start injector from the induction manifold with its feed pipe attached. Place the nozzle of the injector into a suitable clean container so that its operation can be observed.
12. Connect the electrical plug to the cold start injector and the two cables, one to an auxiliary electrical feed and the other to an earth point.

Note Exercise care to eliminate the possibility of an electrical spark (use the micro-switch to make and break the circuit).

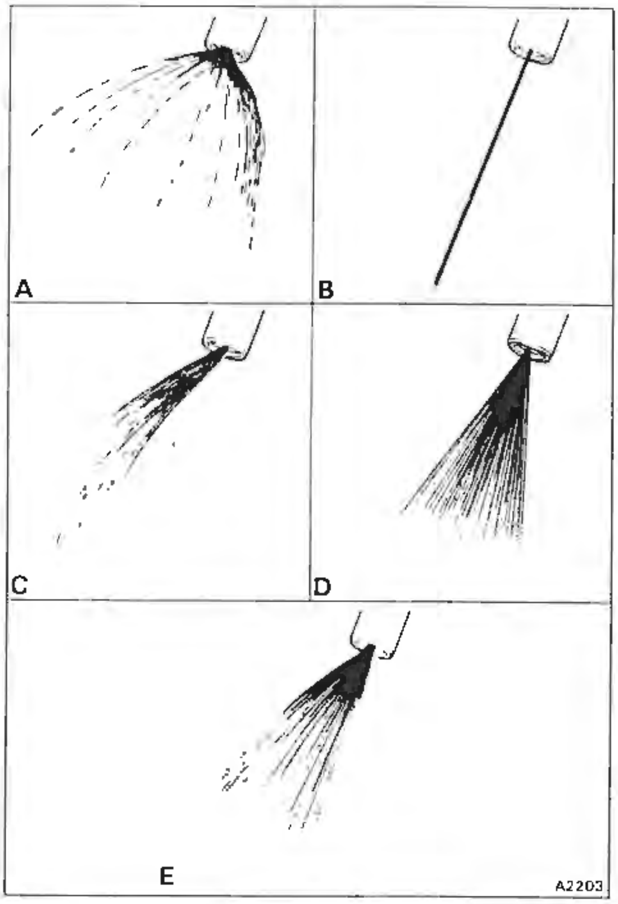

Fig. B2-33 Injector spray patterns
Unacceptable spray patterns
A Drop formation
B Cord spray
C Spray in strands

Acceptable spray patterns
D Good spray formation
E Single-sided but still a good spray formation

13. Apply electrical power to operate the fuel pump (refer to page B2-33).
14. Operate the micro-switch to complete the auxiliary electrical circuit. The cold start injector should spray fuel as the contacts in the micro-switch complete the electrical circuit; if it does not spray fuel, fit a new injector.
15. Dry the nozzle of the cold start injector.
16. Repeat Operation 13 but do not operate the micro-switch. Note that no drops of fuel should form on or drip from the injector nozzle. If the injector is defective a new one should be fitted.
17. Remove the auxiliary test lead from the injector and connect the loom plug.

Procedure 15 Checking the engine running sensor
1. Switch on the ignition, the fuel pumps should not operate.

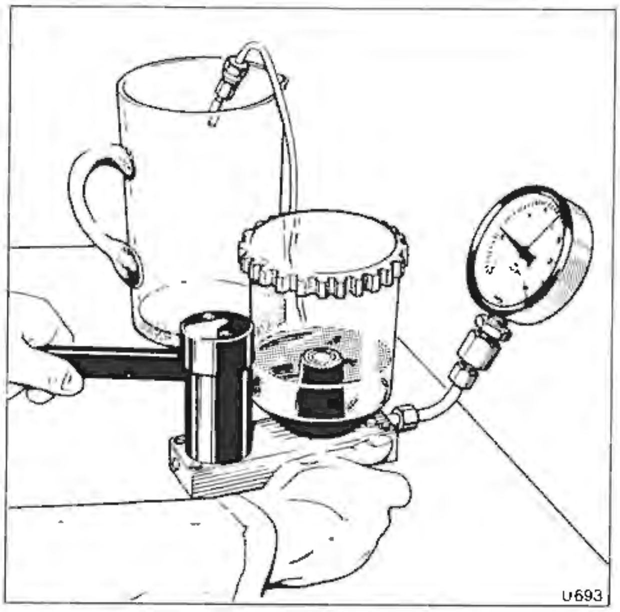

Fig. B2-34 Testing an injector

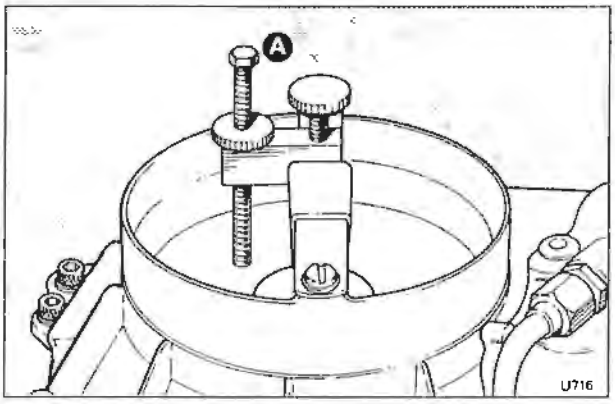

Fig. B2-35 Air flow sensor plate movement adjustment device
A Adjusting screw (part of accessory kit RH 9960)

2. Switch off the ignition.
3. Disconnect the engine running sensor electrical plug and socket situated approximately 75 mm (3 in.) along the loom from the sensor.
4. Produce a test lead with an appropriate 'TTS' type connection on each end. Bridge the white/pink and pink on the vehicle loom socket.
5. Switch on the ignition, the fuel pumps should operate.

This test isolates the engine running sensor from the fuel pump circuit.

If the fuel pumps still do not operate, check for a fault in one of the following.

a. The pink cable to the vehicle loom socket via fuseboard F2, fuse B5, 20 Amp.
b. The white/pink cable to the main fuel pump.
c. The fuel pump.

6. Switch off the ignition, remove the bridging wire and reconnect the engine running sensor.
7. Bridge the engine cranking interlock relay, the fuel pumps should operate.

This test proves that the cranking by-pass situated inside the engine running sensor is operating.

If the fuel pumps do not operate, check for a fault in the following.

a. The auxiliary white/red cable on the starter relay (12 volts).
b. The brown/black cable from the starter relay to the loom socket.
c. Check for continuity of the white/black (coil-ve).

Normally, a symptom of a fault in this supply is that the engine will start when cranked by the starter motor but stops immediately the key is released.

If the fault diagnosis indicates that the loom and ancillary components are satisfactory, fit a new engine running sensor.

Procedure 16 Checking the fuel accumulator diaphragm for a leak

1. Locate the flexible hose connecting the accumulator to the fuel tank return pipe.
2. Suitably clamp the hose to prevent unpressurized fuel from flowing out during the test.
3. Unscrew the worm drive clip securing the flexible

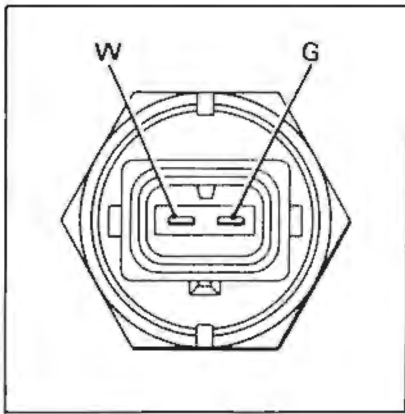

Country	**Switch temperature**	**Resistance ohms (meter reading)**		
		Between terminal G and earth	Between terminal W and earth	Between terminal G and W
Australia Japan North America	Less than 10°C (50°F)	50 - 70	0	50 - 70
	More than 20°C (68°F)	50 - 70		
Other than Australia Japan North America	Less than 35°C (95°F)	36	0	36
	More than 35°C (95°F)	72	144	72

A2154

Fig. B2-36 Thermal time switch

hose to the connection on the fuel accumulator.

4. Withdraw the hose from the connection.
5. Apply electrical power to operate the fuel pump (refer to page B2-33) and pressurize the fuel accumulator.
6. Ensure that no fuel flows from the open connection on the fuel accumulator during the test.
7. If fuel does flow from the open connection, the accumulator diaphragm is leaking and a new fuel accumulator must be fitted.
8. Connect the fuel pipe and remove the clamp.

Procedure 17 Checking the operation of the idle speed by-pass solenoid

1. Ensure that the parking brake is applied. Warm-up the engine.
2. Allow the engine to idle at 580 rev/min in park with the air conditioning system switched on.
3. Apply the footbrake and engage drive. Check that the idle speed is between 560 rev/min and 620 rev/min.

If the idle speed falls below 560 rev/min check the following.

a. Test for electrical feed to the solenoid when in drive.

b. Check for a blocked hose.

If the above are found to be satisfactory, the solenoid valve is faulty and should be replaced.

Note This solenoid does not operate with the gear range selector lever in the reverse position.

Procedure 18 Pressure control valve damper failure

To check the pressure control valve damper for failure of the diaphragm, check for evidence of fuel around the small diameter metal pipe at the front of the damper assembly. If a diaphragm failure is suspected **do not run the engine** as high pressure fuel will emerge from the damper pipe.

Fit a new damper assembly if a failure of the diaphragm is suspected.

Procedure 19 Cold start acceleration enrichment switch

1. Disconnect the electrical feed to the cold start injector.
2. Connect the 'closed loop' system test meter RH 9615 (Bosch Number KDJE-P600) to the vehicle.
3. Switch the test meter scale to 100%.
4. If the coolant temperature is above 33°C (91°F), bridge the system temperature switch situated in the thermostat housing (see fig. B2-37).
5. Disconnect the vacuum hose at the acceleration enrichment switch. Connect the Mityvac pump RH 12495 to the switch connection and apply a vacuum of 508 mm Hg (20 in Hg).
6. Apply electrical power to the 'closed loop' system test meter (refer to page B2-32). Note that the test meter reading should be 50%.
7. Release the vacuum and observe that the reading on the test meter momentarily increases to 65%.
8. If the meter reading does not increase, it could be due to the following.

a. A cable fault involving the acceleration enrichment switch wiring.

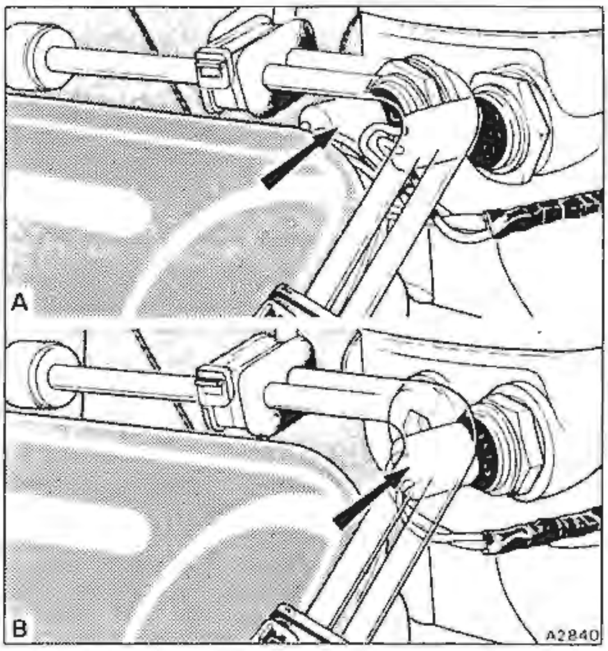

Fig. B2-37 Acceleration enrichment temperature switch
A Cars produced to either a Japanese or North American specification
B Cars produced to an Australian specification

b. A faulty switch.

c. A faulty ECU.

9. Remove the test equipment and replace the starter relay.
10. Release the vacuum, disconnect the pump and fit the vacuum hose to the switch.
11. Remove the bridge from the temperature switch plug. Before connecting the plug to the switch in the thermostat housing, check the switch using a multimeter. Check that the switch is open circuit if the coolant temperature is above 33°C (91°F) or closed circuit if the coolant temperature is below 33°C (91°F).

Full throttle enrichment

This function is operated by the throttle position switch, details of which are given in Chapter K.

Fault diagnosis test equipment and special procedures

This section contains information relating to the fitting procedures for the test equipment used when diagnosing a fault. Also included are the special procedures associated with the fuel injection system.

Depressurizing the fuel system

The fuel in the system may be pressurized (except for the fuel tank and return lines). Therefore, unless the engine has been stationary for a minimum of four hours, it is recommended that the fuel system be depressurized before dismantling any parts of the system.

The depressurizing procedure is given on page B2-15.

Pressure tester valve block assembly
Two types of pressure tester valve block may be encountered.

The original valve block has two valve screws and the later type has only one. Either valve block can be used to carry out the necessary workshop tests. See figure B2-38 for the valve block assembly details.

Note Whenever the pressure tester valve block is not in use, always ensure that the valve screw(s) is open to relieve the pressure on the internal sealing ring(s).

The pressure tester and associated parts are fitted into the control pressure line (see fig. B2-38); the line connecting the fuel distributor to the warm-up regulator. With the test equipment suitably connected

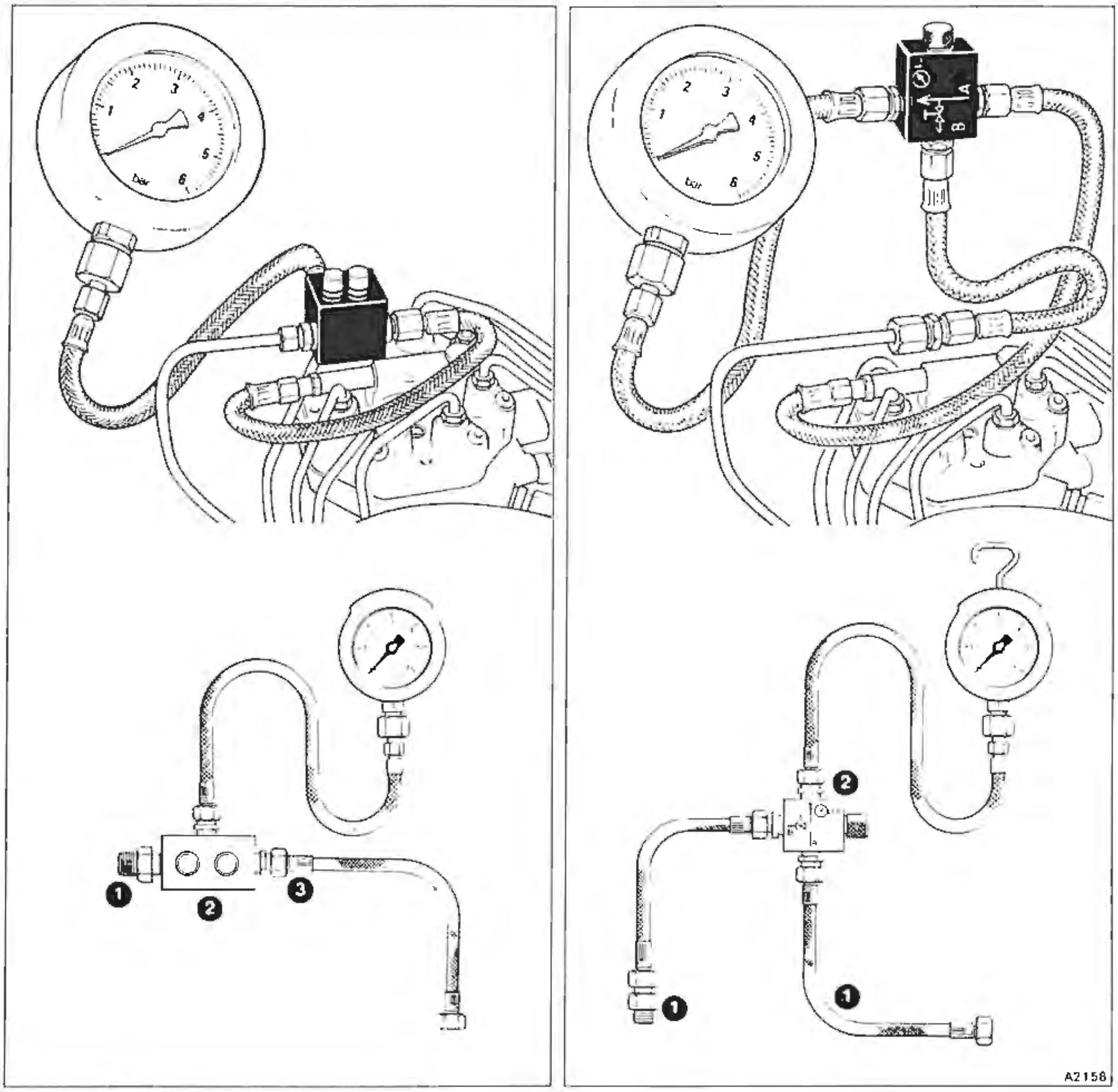

Fig. B2-38 **Pressure tester valve block assembly**

Original design — 2 valve screws
1 Special adapter RH 9607
2 Pressure gauge and valve block RH 9612 (Bosch No. KDEP-1034)
3 Hose and adapter RH 9645 (Bosch No. KDJE-P100/11)

Later design – 1 valve screw
1 Hose and adapter RH 9645 (Bosch No. KDJE-P100/11)
2 Pressure gauge and valve block RH 9873 (Bosch No. KDJE-P100)

at this point, the fuel injection system can be checked for.

a. Cold and warm control pressure.
b. Fuel system leakage (internal and external).
c. Primary system fuel circuit operation and pressure.

Installation of the test equipment

1. Carry out the usual workshop safety precautions. Switch on the ignition. Ensure that the gear range selector lever is in the park position. Switch off the ignition and remove the gear range selector fuse from the fuseboard.
2. Disconnect the battery.
3. Depressurize the fuel system (refer to page B2-15).
4. Loosely assemble the test equipment and then install it onto the engine as shown in figure B2-38. Ensure that all pipe nuts and unions are tight.

Bleeding the test equipment

After fitting but prior to using the test equipment, always ensure that it is properly bled as follows.

5. Disconnect the electrical plugs from the warm-up regulator and the auxiliary air valve.
6. Connect the battery.
7. Allow the pressure gauge to hang down under its own weight with the flexible hoses fully extended.
8. Ensure that the valve screw(s) on the pressure tester valve block is open.
9. Apply electrical power to operate the fuel pump and build-up pressure in the system (see page B2-33).
10. Open and close the valve screw on the valve block (valve screw number 1 on the early type of block) six or seven times in a ten second rhythm.
11. After the equipment has been satisfactorily bled, lift the gauge up and suspend it from a bonnet catch. Finally, ensure that the valve screw(s) is open.
12. The pressure gauge and associated parts are now ready for use.

Fuel delivery quantity comparison tester RH 9613 (Bosch Number KDJE 7455)

If there is any discrepancy in the quantity of fuel delivered by the individual fuel distributor outlets, it can be measured by a comparison test, using the test equipment RH 9613 (Bosch Number KDJE 7455). This equipment is illustrated in figure B2-39.

The test equipment is designed in such a way that the tests can be carried out without removing the fuel distributor from the engine.

Ideally, the tester should be set permanently on a mobile trolley, so that once it is levelled-up only the trolley needs to be manoeuvred to the test site. However, the tester can be set up on a table close to the test vehicle and the test equipment levelled-up for each test using the levelling screws and spirit level.

The test equipment should be fitted to the vehicle as follows.

1. Disconnect the battery.
2. Unscrew the unions securing the fuel injector lines to the fuel distributor outlets.
3. Screw the special adapters supplied with accesssory kit RH 9960 into the fuel distributor outlets.

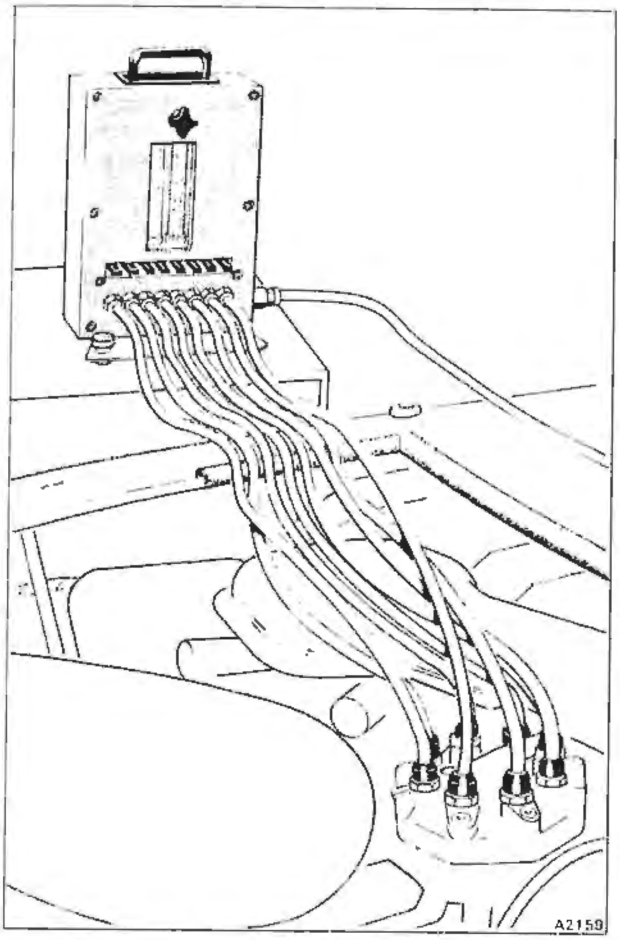

Fig. B2-39 **Installation of comparison tester**

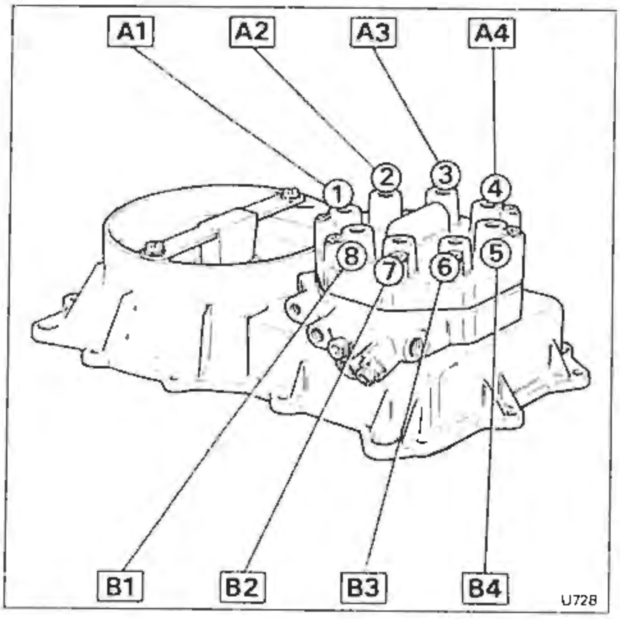

Fig. B2-40 **Fuel distributor connections**
○ Key number on test equipment (left to right)
☐ Engine cylinder

4. Fit the automatic couplings on the ends of the test equipment, to the special adapters in the fuel distributor outlets.

Note Outlet one from the fuel distributor should always be nearest to the fuel inlet connection. Figure B2-40 indicates which test line and switch of the test equipment are connected to which engine cylinder.

5. Route the fuel return pipe across the engine, along the side of the car and into the filler for the fuel tank.
6. Disconnect the electrical plug from the warm-up regulator and the auxiliary air valve.
7. Connect the battery.

Note The condition of the battery is critical for this test. Therefore, always check the state of charge of the battery.

8. Apply electrical power to operate the fuel pump and build-up pressure in the system (see page B2-33).
9. To bleed the test equipment, remove the air intake elbow from the mixture control unit and push the air flow sensor plate downwards to its fully opened position. Press each key on the flowmeter one after the other, whilst simultaneously operating the three-way tap. Continue this operation until there are no bubbles in the two rotameters.
10. Allow the air flow sensor plate to return to the zero position and switch off the ignition. The test equipment is now ready for use.
11. To remove the test equipment, depressurize the system and reverse the procedure.

'Closed loop' system test meter RH 9615
(Bosch Number KDJE-P600)

1. Fit the two test cables into the side of the test meter.
2. Fit the other ends of the cables to the vehicle as follows (see fig. B2-41).

Five pin, three core cable
Locate the black/slate test cable situated above the side scuttle trim pad on the right-hand side of the vehicle. Attach the small test connection to the Lucar connector.

Connect the main brown (feed) cable to a known 12 volts supply and the green/yellow cable to a good earth point. For convenience, it is suggested that the cables be fitted to an adapter that will fit into the cigar lighter socket.

Two volts output cable
Disconnect the oxygen sensor, three pin cable connector. This is situated in the rear right-hand corner of the engine compartment. Fit the test cable to the light green cable in the connector plug to the ECU.

3. Withdraw the starter relay.
4. The test meter is now ready to be used.
5. Use the test meter by turning and holding the ignition key in the switchbox to the START position.

Apply control pressure to the system

1989 model year (4 door cars)

1. Raise the bonnet and remove the relays cover.
2. Locate the right-hand valance to engine 7-way socket (only connected on turbocharged cars).
3. Produce a test cable incorporating a micro-switch.
4. Bridge the 3.0 pink cable and the 3.0 white/pink cable at the socket (see fig. B2-42).
5. Operate the micro-switch. The fuel pump will run and pressure will build-up in the system.
6. Always remove the bridging cable immediately the test is complete.

1987/88 model years (2 and 4 door cars)
1989 model year (2 door cars)

1. Withdraw the starter inhibit relay (see fig. B2-42).
2. Produce a bridge cable of suitable length.
3. Bridge the green cable in the windscreen washer reservoir motor and the white/pink cable connection on the starter inhibit relay mounting block.
4. Switch on the ignition.
5. The fuel pump will run and pressure will build-up in the system.
6. Always remove the bridging cable immediately the test is complete.

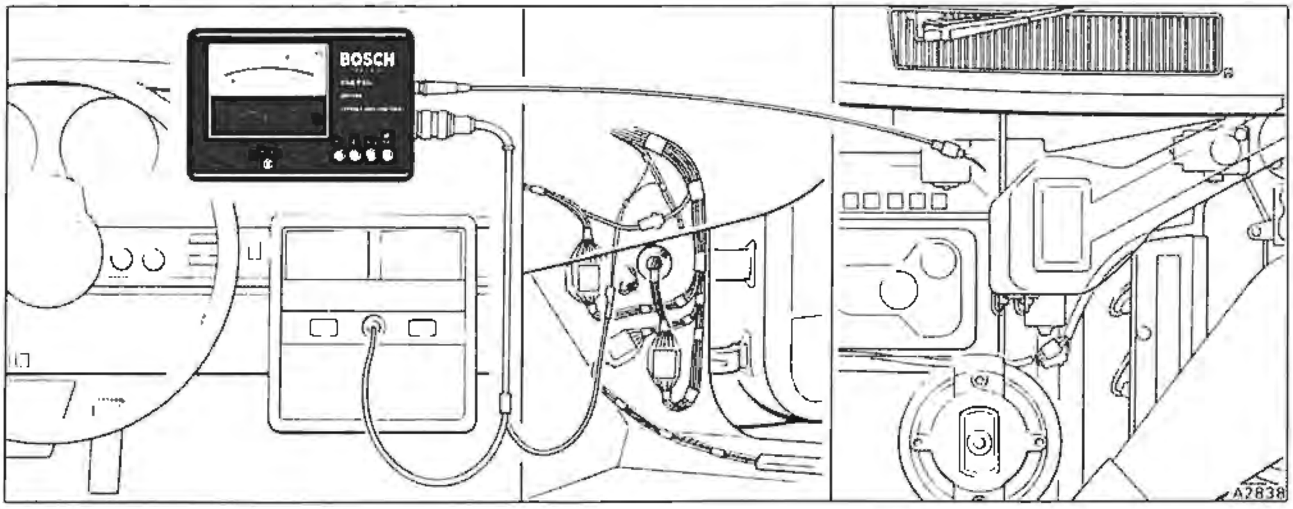

Fig. B2-41 'Closed loop' system tester

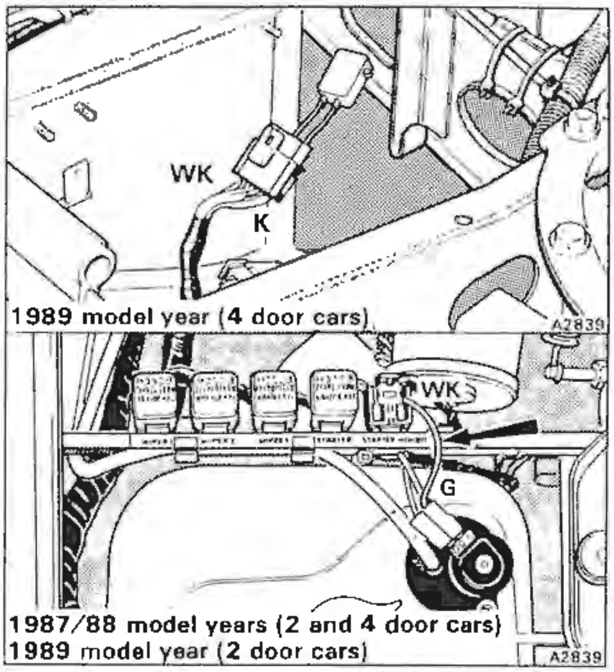

Fig. B2-42 **Applying control pressure to the system**

Apply electrical power to operate the fuel pump and build-up pressure in the system

1. Carry out the operations listed under the heading, Apply control pressure to the system.

Apply electrical power to the heaters in the auxiliary air valve and the warm-up regulator

1. Carry out the operations listed under the heading, Apply control pressure to the system.

Removal and fitting of components

Before dismantling any connections and removing components always depressurize the system. Always blank off any open connections to prevent the ingress of dirt.

Mixture control unit (see figs. B2-40 and B2-45)
The mixture control unit comprises the air meter, the fuel distributor, and the primary system pressure regulator.

The fuel distributor and/or the primary system pressure regulator can be removed separately from the assembly. However, in the process of general dismantling the components would be removed as one assembly.

Fuel distributor – To remove and fit

1. Disconnect the battery and depressurize the fuel system (refer to page B2-15).
2. Unscrew and remove the following connections on the fuel distributor.
   - a. The union securing the warm-up regulator feed pipe to the adapter on the top of the fuel distributor.
   - b. Fuel supply to the fuel distributor.
   - c. Connection to the pressure control valve (if fitted).
   - d. Fuel supply to the cold start injector.
   - e. Fuel return to the fuel tank.
   - f. Fuel return from the warm-up regulator.
3. Unscrew the unions from both ends of the injector pipes and carefully withdraw the pipes.
4. Using a screwdriver, unscrew the securing screws situated on top of the distributor.
5. Lift the fuel distributor from the mixture control unit and collect the rubber sealing ring (resistance will be encountered due to the rubber sealing ring).
6. If the control piston is to be removed, carefully bend the retaining tabs away from the bore of the fuel distributor barrel and withdraw the piston. Clean the control piston in solvent cleaner and lubricate with white spirit.
7. Fit the fuel distributor and control piston by reversing the removal procedure. Note that the rubber sealing ring fitted in between the fuel distributor and mixture control unit must be in good condition. If in doubt, fit a new sealing ring.

When installing the sealing ring ensure that it is lubricated with a suitable grease and that it does not become trapped when the fuel distributor is fitted. This could cause a subsequent air leak which may be difficult to detect. Check the idle mixture strength.

8. If a new fuel distributor is fitted, leave one of the injector lines disconnected so that the following basic setting can be carried out.
9. Apply electrical power to operate the fuel pump and build-up pressure in the system (see page B2-33).
10. Turn the idle mixture adjusting screw clockwise using the spanner RH 9608, until the fuel just starts to be delivered at the open outlet on the fuel distributor. Then, turn the adjusting screw anti-clockwise one half turn.

The basic setting is now correct and assembly can be continued.

Primary system pressure regulator
(see figs. B2-5, B2-43, and B2-44)
The pressure regulator can be removed and serviced separately from the fuel distributor. A service kit is available containing a new system pressure regulator seal, push valve assembly, and system pressure adjusting shims.

1. Disconnect the battery and depressurize the fuel system (refer to page B2-15).
2. Unscrew the large hexagonal locking screw situated in the side of the fuel distributor (see figs. B2-5 and B2-43).
3. Withdraw the complete pressure regulator and push valve assembly. Take care not to lose the shim washer(s) if the regulator plunger and spring become dislodged.
4. Lift off the regulator plunger and spring, collect the shim washer(s).
5. Examine the rubber 'O' ring situated on the end of the regulator plunger. A new 'O' ring can be fitted but the control plunger must remain with the fuel distributor.
6. To fit a new 'O' ring (see fig. B2-44) commence by cutting off the old ring with a very sharp blade. **Do not**

attempt to remove the crimped retaining ring.

7. Draw the new rubber 'O' ring over the crimped retaining ring, using a blunt tool. Take care not to over stretch the new rubber 'O' ring.

8. Check that the 'O' ring is correctly fitted and has not been damaged. Ensure that it can be turned by hand and that there is a clearance of approximately 0,2 mm (0.008 in) between the retaining ring and the sealing ring.

9. To assemble and fit the regulator valve reverse the dismantling procedure using the new push valve assembly and existing shims.

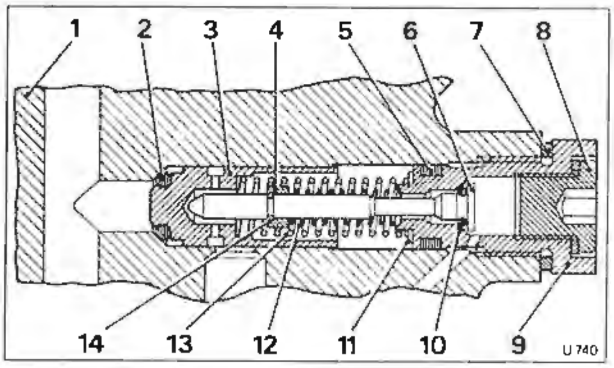

Fig. B2-43 Primary system pressure regulator valve
1 Fuel distributor housing
2 Sealing ring
3 Regulating plunger
4 Retaining ring
5 Sealing ring
6 Push valve
7 Sealing washer
8 Inner locking screw
9 Outer locking screw
10 Sealing ring
11 Shim washers
12 Push valve spring
13 Regulator spring
14 Circlip

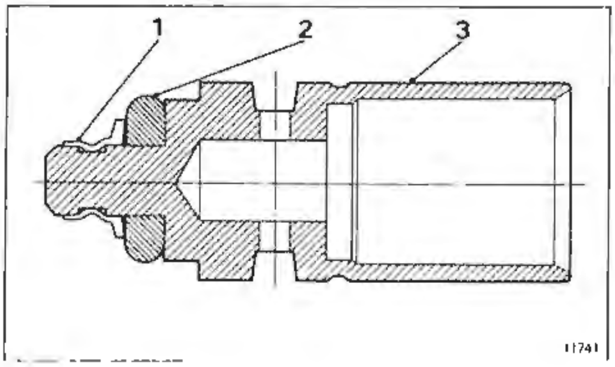

Fig. B2-44 Regulating plunger sealing ring
1 Crimped retaining ring
2 Sealing ring
3 Regulating plunger

10. Upon completion of the work, fit the assembly into the fuel distributor and torque tighten the large hexagonal locking screw.

11. Carry out the workshop procedure for checking the primary system pressure and adjust if necessary using the shims supplied in the service kit. Note that 0,1 mm (0.004 in) of shims is equivalent to 0,15 bar (2.17 lbf/in²) of system pressure.

12. Carry out the workshop procedure for checking the fuel system for leaks.

Mixture control unit assembly – To remove and fit (see figs. B2-2 and B2-45)

1. Disconnect the battery and depressurize the fuel system (refer to Chapter C).
2. Unscrew the worm drive clip securing the air intake duct, lift the ducting clear of the assembly.
3. Unscrew the worm drive clip securing the breather hose to the air intake elbow, free the hose.
4. Unscrew the two nuts retaining the long reach studs to the mixture control unit.
5. Withdraw the elbow.
6. Disconnect the electrical plug(s) to the auxiliary air valve and the pressure control valve (if fitted).
7. Free the two hoses to the auxiliary air valve and the pressure control valve (if fitted). Free the hose from the rear of the idle speed solenoid.
8. Unscrew the injector pipe unions from on top of the fuel distributor. Free the pipes.
9. Unscrew the pipe nuts connecting the fuel feed and return lines to the fuel distributor.
10. Unscrew the cold start injector fuel feed pipe nut, from the injector. Free the joint.
11. Withdraw the purge hose (if fitted) from the front of the airmeter housing.
12. Withdraw the electrical plug(s) from the warm-up regulator and the acceleration enrichment switch (if fitted).
13. Free the vacuum hose from its connection beneath the acceleration enrichment switch (if fitted).
14. Free the hoses from the solenoid valve(s) mounted between the warm-up regulator and the fuel distributor.
15. Unscrew the mounting nut located beneath the rear of the warm-up regulator mounting bracket.
16. Unscrew the four setscrews retaining the mixture control unit to the throttle housing.
17. Withdraw the mixture control unit with the ancillary units still attached.
18. Remove the upper section of the mixture control unit from the lower half (air outlet duct) by unscrewing the cap nuts situated around the face joint.
19. Fit the assembly by reversing the procedure given for removal, noting that the face joint between the two halves of the assembly should be clean and coated with Wellseal.
20. Ensure that any rubber sealing rings that have been disturbed are in good condition. It is **essential** that the rubber sealing ring between the throttle body and air guide housing is installed correctly (not kinked, etc.).

Note Whenever a hose or an electrical plug is disconnected, it is advisable to attach an identification label to facilitate assembly.

In addition, any open connections should be blanked as soon as possible, to prevent the ingress of dirt.

Throttle body – To service
To remove, fit, and overhaul the throttle body refer to Chapter K.

Warm-up regulator — To remove and fit
(see figs. B2-1 and B2-47)

1. Disconnect the battery and depressurize the fuel system (refer to page B2-15).
2. Detach the electrical plug(s) from the warm-up regulator and the acceleration enrichment switch (if fitted).

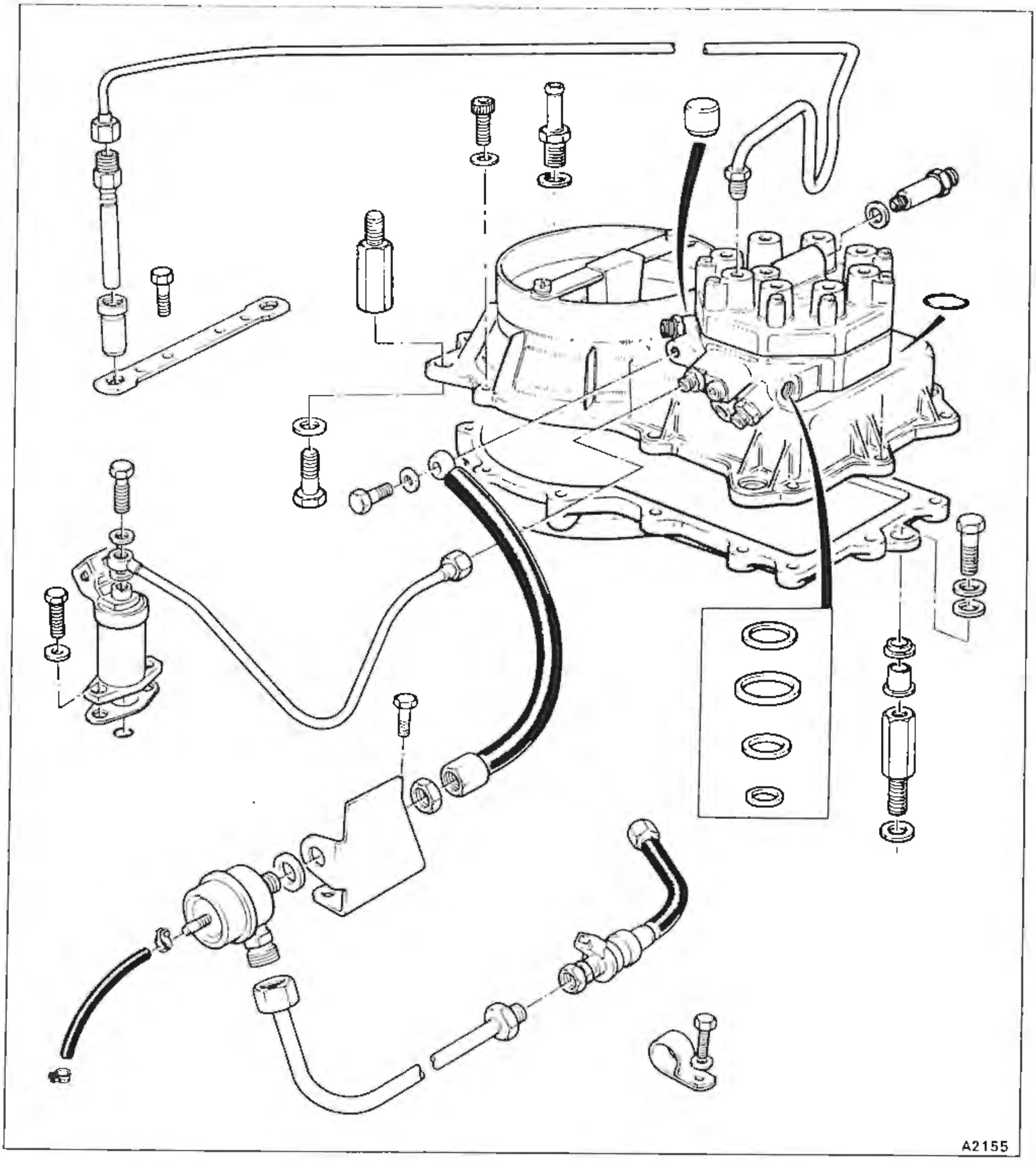

Fig. B2-45 Fuel distributor and associated components
Some of the items shown are not fitted to all cars

3. Unscrew the fuel feed and return pipe connections.
4. Detach the vacuum hose from beneath the acceleration enrichment switch (if fitted).
5. Detach the hoses to the solenoid valve(s) situated between the warm-up regulator and the fuel distributor.
6. Unscrew the two setscrews and the one nut that secure the warm-up regulator mounting bracket to the engine.
7. Withdraw the warm-up regulator.
8. Fit the warm-up regulator by reversing the procedure.

Note Whenever a hose is disconnected, it is advisable to attach an identification label to facilitate assembly.

In addition, any open connections should be blanked as soon as possible, to prevent the ingress of dirt.

Pressure control valve damper (if fitted) – To remove and fit (see figs. B2-12 and B2-45)

1. Disconnect the battery and depressurize the fuel system (refer to page B2-15).

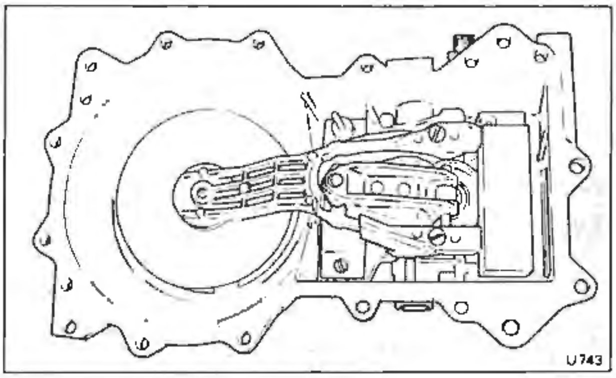

Fig. B2-46 Air flow meter assembly (inverted)

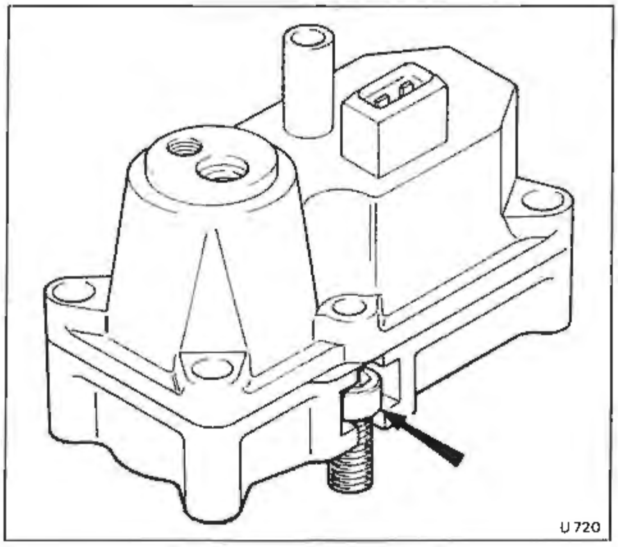

Fig. B2-47 Warm-up regulator mounting screws

2. Unscrew the inlet and outlet unions and detach both pipes.
3. Unscrew the large lock-nut retaining the damper assembly to the mounting bracket.
4. Fit the assembly by reversing the removal procedure.

Pressure control valve (if fitted) – To remove and fit (see figs. B2-12 and B2-45)

1. Disconnect the battery and depressurize the fuel system (refer to page B2-15).
2. Disconnect the electrical plug.
3. Unscrew the pipe union of the fuel return pipe situated beneath the pressure control valve damper.
4. Unscrew the union from the fuel return line situated approximately 150 mm (6.0 in) to the rear of the pressure control valve.
5. Unscrew the setscrew retaining the valve clamping bracket to the side of the throttle body. Withdraw the valve assembly.
6. Fit the pressure control valve by reversing the removal procedure.

Auxiliary air valve — To remove and fit (see figs. B2-19 and B2-48)

1. Disconnect the electrical plug.
2. Unscrew the worm drive clips securing both of the rubber hoses.
3. Unscrew the two mounting setscrews.
4. Withdraw the auxiliary air valve.
5. Fit the auxiliary air valve by reversing the removal procedure.

Cold start injector — To remove and fit (see figs. B2-9 and B2-45)

1. Disconnect the battery and depressurize the fuel system (refer to page B2-15).
2. Detach the electrical plug from the cold start injector.
3. Unscrew the union connecting the fuel feed pipe to the injector.
4. Unscrew the two small setscrews retaining the injector in position. Collect the washer from each setscrew.
5. Withdraw the injector and collect the rubber sealing ring.
6. To fit the cold start injector reverse the procedure given for removal.

Thermal time switch — To remove and fit (see fig. B2-20)

1. Disconnect the battery and remove the electrical plug from the thermal time switch.
2. Drain the engine coolant (refer to Workshop Manual TSD 4700, Chapter L).
3. Locate the brass thermal time switch (the forward switch on the inside of the thermostat housing).
4. Detach the electrical plug and carefully unscrew the switch.
5. Fit the switch by reversing the procedure, noting the following.

Always fit a new aluminium sealing washer.

Always coat the threads of the switch with a suitable sealant (e.g. Loctite 572).

Do not overtighten the switch.

Injector – To remove and fit (see figs. B2-8 and B2-45)
The removal and fitting procedure given below is for one injector but the instructions apply equally to all of the injectors.

1. Disconnect the battery and depressurize the fuel system (refer to page B2-15).
2. Free the loom rail from the respective side of the engine. Manoeuvre the rail away to gain access to the injectors.
3. Unscrew the union connecting the fuel line to the injector.
4. Unscrew the two setscrews securing the injector

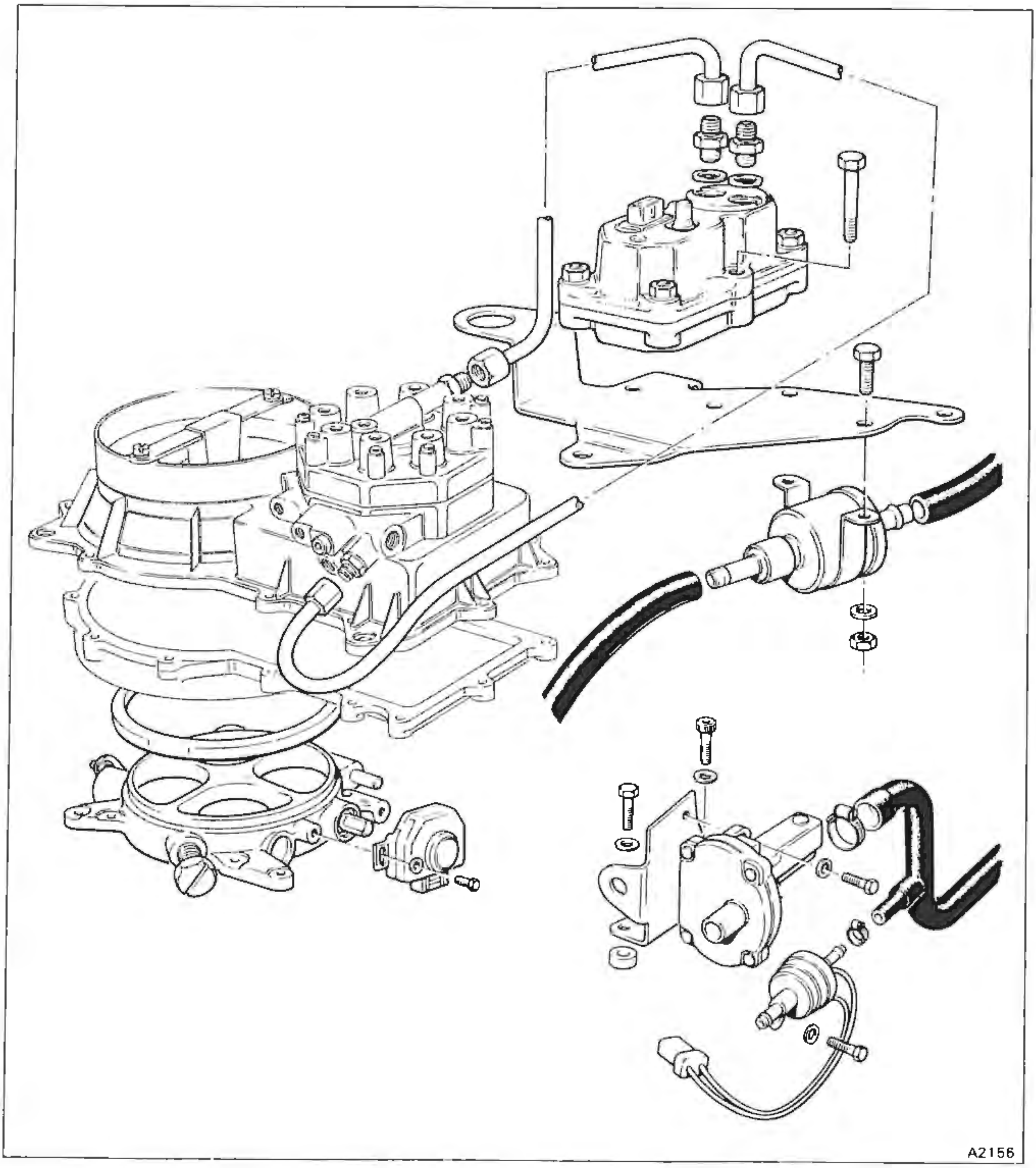

Fig. B2-48 Fuel distributor and associated components retaining plate to the cylinder head.

5. Remove the retaining plate and withdraw the injector.

6. Fit the injectors by reversing the procedure given for removal, noting that the rubber insulating sleeve must be in good condition.

It is essential to check the spray patterns of the injectors before they are fitted.

New injectors must be thoroughly flushed out before they are tested.

Oxygen sensor — To remove and fit (see fig. B2-14)

1. Disconnect the battery.
2. Disconnect the oxygen sensor. The connection is situated in the rear right-hand corner of the engine compartment.
3. Unscrew the oxygen sensor from the exhaust pipe.
4. Fit the oxygen sensor by reversing the removal procedure, noting that the threads of the sensor must be smeared with Never-seez assembly compound.

Failure to do this will probably result in serious thread damage when subsequently removing the oxygen sensor.

It is important that Never-seez is applied only to the threads of the unit, take great care not to allow the compound to get onto the slotted shield below the threaded portion.

Note On certain cars it may be necessary to remove sections of the grass-fire shields to gain access to the oxygen sensor (refer to Workshop Manual TSD 4700, Chapter Q).

Acceleration enrichment switch (if fitted) – To remove and fit (see fig. B2-16)

1. Disconnect the battery.
2. Detach the electrical plug.
3. Withdraw the hose from the base of the switch.
4. Unscrew the large retaining nut situated beneath the switch. Collect the washer and withdraw the assembly.
5. Fit the unit by reversing the procedure.

Engine running sensor – To remove and fit

1. Disconnect the battery.
2. Locate the main fuseboard, the engine running sensor is located directly behind the fuseboard on the right-hand side.
3. Follow the cables that emerge from the top of the assembly, to the cable connector situated approximately 150 mm (6 in) from the sensor. Disconnect the cables at this junction.
4. Withdraw the relays and mounting block situated directly in line with the engine running sensor.
5. Working from behind the assembly, unscrew the two securing nuts.
6. Withdraw the two long mounting setscrews.
7. Carefully manoeuvre the engine running sensor from its location.
8. Fit the assembly by reversing the procedure.

Electronic control unit – To remove and fit

1. Disconnect the battery.
2. Locate the ECU above the right-hand footwell.
3. Disconnect the multi-pin plug.
4. Unscrew and remove the two mounting setscrews and nuts situated one on either side of assembly.
5. Pull the assembly to release it from the mounting clip, situated at the front of the unit.
6. Fit the unit by reversing the procedure.

Acceleration enrichment temperature switch – To remove and fit (see fig. B2-37)

If a car is fitted with acceleration enrichment, the temperature cut-out switch is situated in the outside of the thermostat housing.

Where the thermostat housing has two switches, the acceleration enrichment temperature switch is the one to the rear.

1. Disconnect the battery and drain the coolant.
2. To remove the switch, disconnect the electrical plug. Unscrew the switch in an anti-clockwise direction.
3. Fit the switch by reversing the procedure, noting that a new sealing washer should always be fitted and the threads of the switch coated with a suitable sealant (e.g. Loctite 572) prior to fitting.

Service adjustments

Preliminary checks

Before carrying out any tuning, the following basic checks should be made.

1. Check the condition of the sparking plugs.
2. Ensure that the throttle linkage is correctly set (refer to Chapter K).
3. Ensure that the throttle position switch is correctly set (refer to Chapter K).
4. Check all air hose connections for tightness.
5. Select park and remove the starter relay. Turn the ignition key to the START position and check that the pressure control valve vibrates. This operation only applies to cars fitted with a 'closed loop' lambda control system. Fit the starter relay.
6. Start the engine and confirm the following.

a. Operation of all 8 engine cylinders.

b. Operation of the 'closed-loop' system (if fitted). Observe the oxygen sensor warning panel or test meter reading.

7. With the engine running check the fuel system and the entire induction system (including the EGR system, if fitted) for leaks.

Tuning procedure

1. Connect an impluse tachometer to the engine in accordance with the manufacturer's instructions.
2. Connect an ignition stroboscopic lamp to the engine in accordance with the manufacturer's instructions.

Note Operations 1 and 2 can be combined by fitting suitable diagnostic test equipment (e.g. Bosch MOT 201) to the diagnostic socket (refer to Chapter E).

3. Remove the blank from the exhaust pipe adjacent to the oxygen sensor (if fitted) and fit the sample tapping adapter RH 9611.
4. Fit a suitable CO meter.

5. Ensure that the engine is at normal operating temperature.

6. If the complete tuning procedure is to be carried out, the following sequence of operations is recommended.

a. Check the ignition timing (refer to Chapter E).

b. *Check the purge flow rate (refer to Chapter G).

c. Check the idle mixture strength.

d. *Check the operation of the E.G.R. system and the air injection system (refer to Chapter F).

e. Check the engine idle speed.

Note The asterisk denotes a system only fitted to certain cars.

Idle mixture strength – To set

The mixture strength must be checked with the engine stabilized at its normal operating temperature and at an ambient temperature of between 15°C and 30°C (59°F and 86°F).

The engine oil filler cap **must be open** and the idle speed set to 580 rev/min with the air conditioning system switched on.

On cars fitted with a catalytic converter, disconnect the oxygen sensor at the plug in the engine compartment.

Note It is important that the test equipment used to set the idle mixture strength meets the following specification.

Accuracy – CO meter range 0% to 2%
CO concentration within + 0·1%
Rotational speed within ± 10 rev/min.

1. On cars fitted with a catalytic converter, unscrew the blank from the exhaust (situated in front of the catalytic converter). Fit the sampling probe RH 9876 and connect it to the CO meter.

On cars not fitted with a catalytic converter, insert the sample probe of the CO meter at least 600 mm (24 in) into the exhaust system tailpipe.

On all cars, ensure that the CO meter used is fully warmed-up and correctly adjusted according to the manufacturer's instructions.

2. Briefly accelerate the engine and allow it to return to the idle speed.

The CO concentration should be as follows.

Cars fitted with a catalytic converter	0.5%-0.7%
All other cars	0.6%-0.8%

3. If the CO reading is outside the above range, remove the tamperproof plug and blanking screw (if fitted) from the fuel distributor (see fig. B2-49). Insert the mixture adjusting tool RH 9608 and adjust the mixture strength as follows.

Turn the adjusting screw clockwise to richen the mixture (higher CO %) and anti-clockwise to weaken the mixture (lower CO %).

Note Always approach the final setting from the weak/lean side.

After making an adjustment, remove the adjusting tool and temporarily blank the hole (failure to blank the hole will result in an incorrect CO measurement).

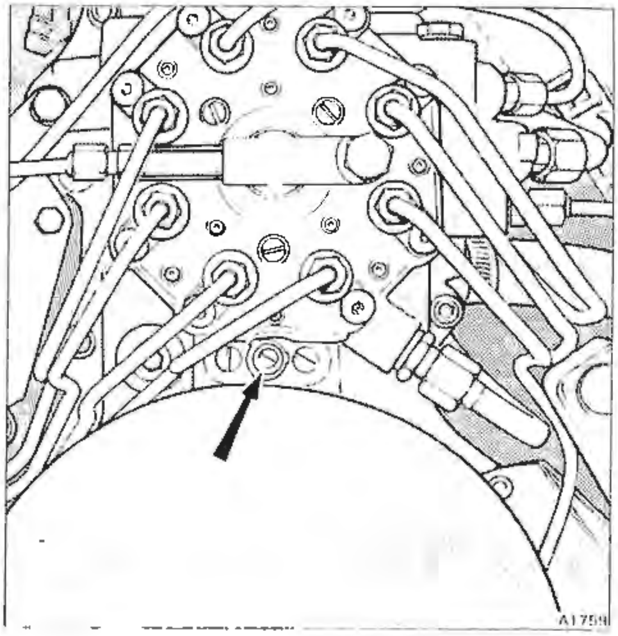

Fig. B2-49 Mixture adjusting screw

4. Reset the idle speed if necessary to 580 rev/min using the idle by-pass screw. Briefly accelerate the engine and re-check the idle CO% reading.

5. Repeat Operations 3 and 4 until the correct CO% reading is obtained.

6. When the CO% reading is correct, remove the sample probe/adapter, close the engine oil filler cap and fit a new tamperproof plug to the fuel metering unit.

7. Connect the oxygen sensor cable (if fitted).

Note Closing the oil filler cap may increase the idle speed. Connecting the oxygen sensor will tend to restore normal idle speed. Do not attempt to correct these small variations in idle speed.

Idle speed – To set

Note It is important that the test equipment used to set the idle speed meets the following specification.
Accuracy – Rotational speed within ± 10 rev/min.

1. To set the idle speed, ensure that the engine has stablized at its normal operating temperature. This can be achieved by allowing the engine to run at idle speed for at least 15 minutes after the thermostat has opened. The opening of the thermostat can be detected by a sudden rise in the temperature of the thermostat elbow pipe.

2. If a fuel evaporative emission control system is fitted, disconnect the purge line at the restrictor (leave the restrictor fitted into the hose to the engine). If there is no restrictor fitted detach the purge line at the valance pipe (refer to Chapter G).

3. If an exhaust emission control system is fitted, disconnect the oxygen sensor cable situated in the rear right-hand corner of the engine compartment.

4. Ensure that the gear range selector lever is in the park position.
5. Ensure that the automatic air conditioning system is switched on.
6. Open the engine oil filler.
7. Set the engine idle speed to 580 rev/min by turning the air by-pass screw situated on the side of the throttle body (see fig. B2-10).
8. Finally, check the operation of the idle speed solenoid.
9. Stop the engine, re-connect all necessary hoses.

Tamperproofing

Two methods of tamperproofing the mixture strength adjusting screw are used.

On cars fitted with a catalytic converter a metal plug is carefully driven into the access hole for the mixture strength adjustment screw.

On cars **not** fitted with a catalytic converter a small screw is inserted into the mixture strength adjustment access hole. A black plastic plug is then pressed into the hole.

Fuel injection system

KE2-Jetronic

The KE2-Jetronic fuel injection system is fitted to turbocharged engines. This is necessary due to the added complexity and increased power output of the engine. The system provides a higher degree of mixture strength control than that provided by the K-Jetronic system.

The KE2-Jetronic system is based upon the mechanical and hydraulic functions of the K-Jetronic system (fitted to naturally aspirated engines) but incorporates electronic control of the air/fuel mixture.

When the engine is operating the accelerator pedal controls movement of the throttle plates, regulating the amount of air drawn into the engine.

An air flow sensor fitted upstream of the throttle plates, monitors the air flow entering the system. Basic engine fuelling requirements are directly related to air flow sensor position. Precise fuel flow is distributed to each cylinder by means of a fuel distributor.

The air flow sensor and the fuel distributor are combined into one assembly known as the mixture control unit (see fig. B3-2).

Metered fuel is continuously sprayed from the injectors, in a finely atomized form, into the inlet port behind each engine inlet valve. The air/fuel mixture is then drawn into the engine cylinders during inlet valve opening periods.

Engine sensors provide the KE2-Jetronic electronic control unit (ECU) with information relevant to coolant temperature, throttle position, manifold pressure, engine speed, and the rate of air sensor plate movement.

The KE2-Jetronic ECU processes incoming signals from the sensors in order to calculate the current supply in milliamps (mA) to the electro-hydraulic actuator (EHA).

The necessary variations in the air/fuel ratio for cold start enrichment, boost pressure enrichment, etc., are achieved by control of the current supply to the EHA. Air/fuel ratio is inversely proportional to the current supply (i.e. an increase in mA supplied to the EHA will reduce the air/fuel ratio (thereby enrichening the mixture).

Air flow sensing

The air flow sensor consists of a calibrated air cone in which moves an air flow sensor plate mounted on a pivoted lever (see fig. B3-4). When the engine is operating the sensor plate is deflected into the air cone; the deflection being dependent upon the volume of air passing through the cone (i.e. throttle plate opening). The air deflects the sensor plate until a state of hydraulic balance exists. This being due to the force of air pressure acting across the air sensor plate area and the primary fuel pressure acting over the control piston area.

The weight of the air sensor plate and connecting lever are balanced by a counterweight on the fuel distributor side of the lever.

Movement of the control piston and its horizontal control edge (see fig. B3-8) either increases or decreases the open area of the eight metering slits (one for each engine cylinder) in the fuel distributor.

Differential pressure valves (one for each cylinder) located within the fuel distributor, maintain a constant pressure drop across the metering slits.

Since the air flow sensor plate and the control piston are operated by the same lever, the rate of basic fuel discharge is proportional to the deflection of the air sensor plate within the calibrated cone as governed by throttle plate opening.

Idle CO (idle mixture strength) is adjusted at the engine idle speed setting during manufacture. Adjustment is achieved by removing a blanking plug and rotating the idle mixture screw. The blanking plug is then replaced and no further mixture adjustment should be necessary.

This basic adjustment alters the relationship of the air flow sensor plate position to the control piston in the barrel of the fuel distributor.

Fuel circuits

Fuel pressures within the KE2-Jetronic fuel circuit are as follows.

Primary pressure	5,7 bar to 5, 9 bar (82.65 lbf/in² to 85.55 lbf/in²)
Differential pressure valves (lower chambers)	5,2 bar to 5,4 bar (75.4 lbf/in² to 78.3 lbf/in²)
Fuel injector pressure	3,8 bar to 4,0 bar (55.1 lbf/in² to 58.0 lbf/in²)

Primary fuel circuit

Primary fuel pressure is controlled by the fuel pressure regulator (see figs. B3-4 and B3-9).

Fuel is supplied to the fuel distributor from the main filter line and enters the centre chamber of the barrel.

Movement of the control piston within the barrel allows metered fuel to pass through the fuel distributor slits, to the upper side of the diaphragm in each differential pressure valve (see fig. B3-5).

The fuel entering the upper chamber of a differential pressure valve, deflects the diaphragm away from the open end of the injector fuel line and thereby allows fuel to flow to the injector.

The fuel injectors have an opening pressure of between 3,8 bar and 4,0 bar (55.1 lbf/in² and 58.0 lbf/in²) and are designed to spray finely atomized fuel under all operating conditions.

The primary fuel circuit also feeds fuel to provide the hydraulic force that is applied above the control

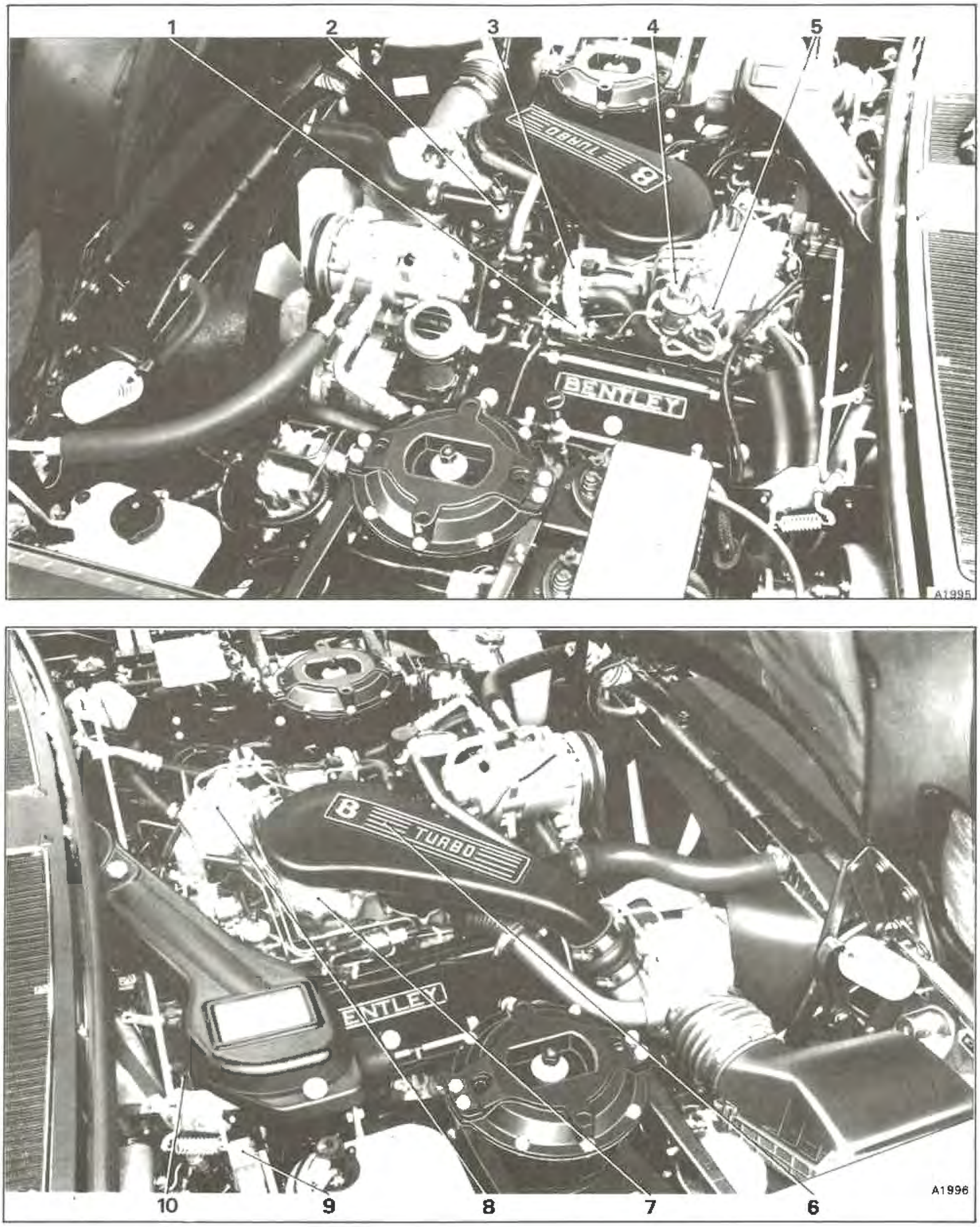

Fig. B3-1 Engine compartment details

1 Idle speed control solenoid
2 Thermostat housing outlet
3 Auxiliary air valve
4 Fuel pressure regulator
5 Electro-hydraulic actuator
6 Air intake
7 Air meter
8 Fuel distributor
9 Fuel injection control relay
10 Air pressure transducer

piston. This provides the balancing force for the air load acting on the air sensor plate.

Primary fuel pressure is supplied to the cold start injector and to the EHA.

When the engine is stopped, the fuel pressure regulator allows system pressure to drop rapidly to a pressure governed by the fuel accumulator. This is just below fuel injector opening pressure.

The retention of the fuel at this pressure during 'hot soak' conditions prevents fuel vaporization and subsequent 'hot starting' difficulties.

A sudden drop in fuel pressure when the engine stops prevents dieseling (the tendency of an engine to continue 'running-on' after the ignition has been switched off).

Fuel distribution
Fuel is distributed uniformly to the cylinders via an accurately machined control piston and barrel assembly (see figs. B3-4 and B3-8). This assembly operates by controlling the open cross sectional area of the metering slits machined in the barrel.

The barrel has one rectangular metering slit for each cylinder.

Depending upon the position of the piston in the barrel, the metering slits are opened a corresponding amount. This allows fuel to flow through the openings to the differential pressure valves.

Each metering slit has a differential pressure valve.

If the air flow sensor plate travel is small, the control piston will only be raised in the barrel a small amount. This only allows a small section of the metering slits to be opened for the passage of fuel.

A hydraulic force is applied on top of the control piston and acts in opposition to the movement of the air flow sensor plate, lever, and control piston. A constant air/fuel pressure drop at the sensor plate is the result. This ensures that the control piston always follows the movement of the sensor plate lever.

A spring is fitted to assist the hydraulic force. It prevents the control piston being drawn upwards in the barrel due to a vacuum effect when the engine is stopped and the system cools down. If the control piston was drawn up in the barrel it could cause an excessively rich mixture when the engine is started again.

When the engine is switched off, the control piston sinks until it rests on the axial sealing ring. This position is set during manufacture and ensures complete closure of the metering slits when the piston is in the rest (zero lift) position. When the piston is resting on the sealing ring and the engine is switched off, the seal prevents primary system fuel leakage past the piston. This would otherwise allow fuel accumulator pressure to be lost too quickly.

Differential pressure valves
There is a differential pressure valve for each engine cylinder (see figs. B3-4 and B3-5).

These valves are a diaphragm type consisting of an upper and lower chamber with the diaphragm separating the two halves (see fig. B3-5).

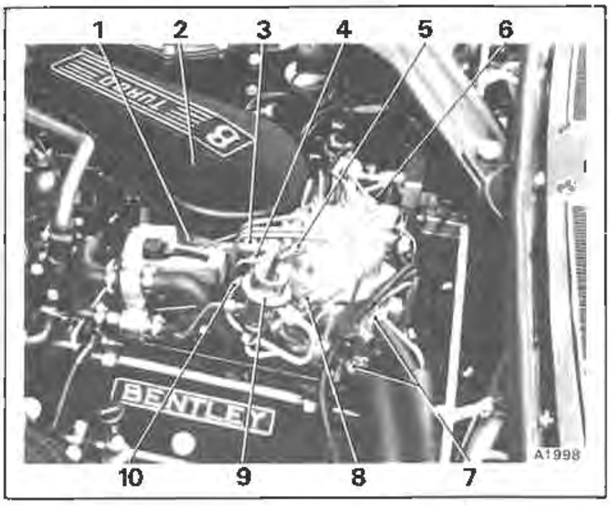

Fig. B3-2 Mixture control unit
1 Air meter
2 Air intake
3 Fuel supply to distributor
4 Fuel return to tank via pressure regulator
5 Fuel feed to cold start injector
6 Injector pipe
7 Hydraulic system pipes
8 Electro-hydraulic actuator
9 System pressure regulator
10 Fuel feed to pressure regulator

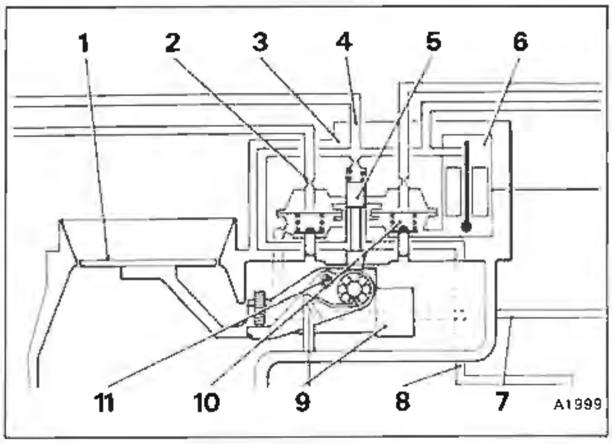

Fig. B3-3 Air flow sensor and fuel distributor (mixture control unit)
1 Air flow sensor plate
2 Fuel line to injector
3 Fuel distributor
4 Fuel line to cold start injector
5 Control piston
6 Electro-hydraulic actuator (EHA)
7 Fuel return line to pressure regulator
8 Fuel supply line
9 Counterbalance weight
10 Differential pressure valve
11 Pivot

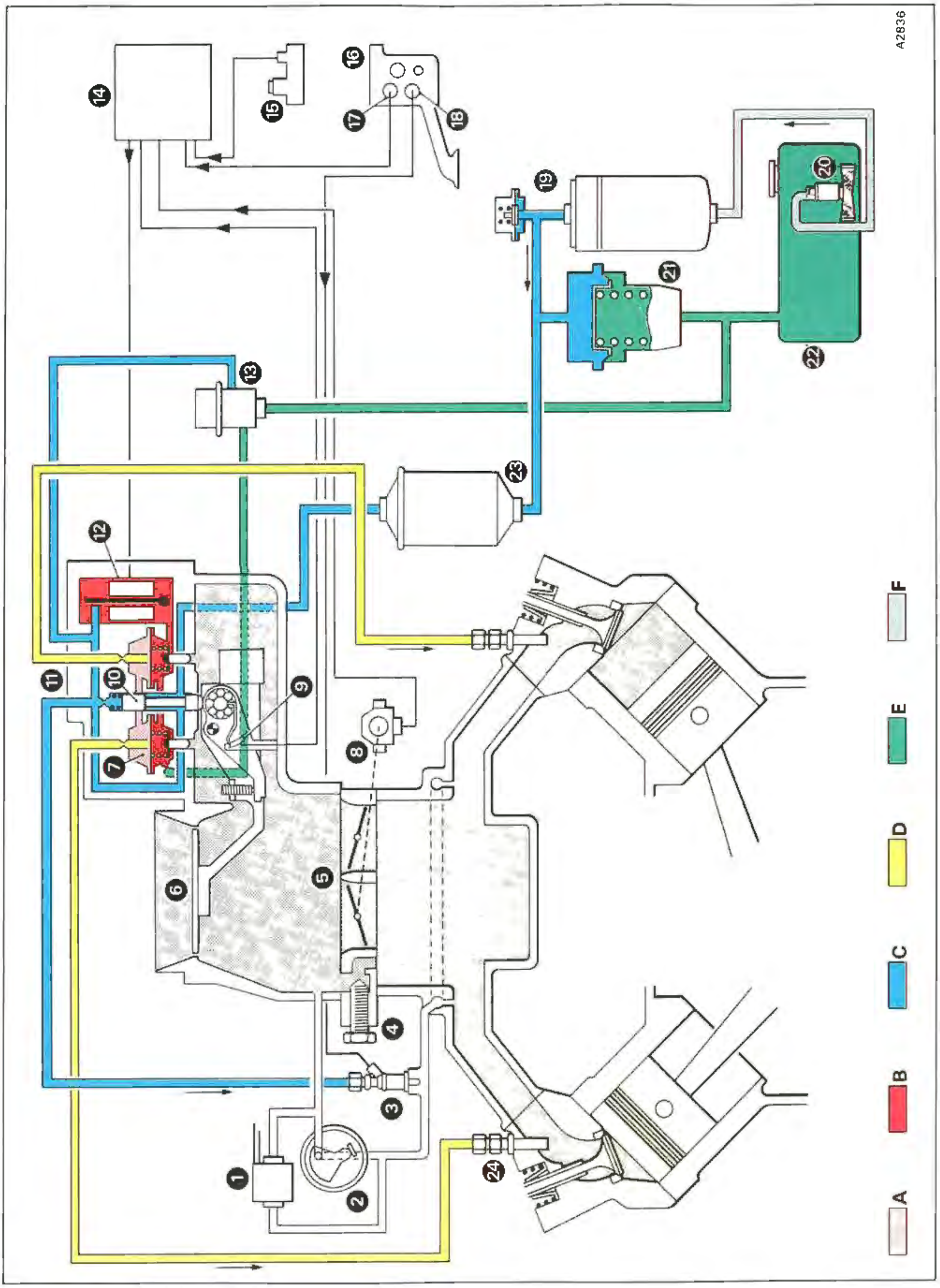

Fig. B3-4 Fuel injection system

Key to fig. B3-4 Fuel injection system

1 Idle speed control solenoid
2 Auxiliary air valve
3 Cold start injector
4 Idle speed adjusting screw
5 Throttle body
6 Air flow sensor plate
7 Differential pressure valve
8 Throttle position switch
9 Air flow sensor potentiometer
10 Control piston
11 Fuel distributor
12 Electro-hydraulic actuator (EHA)
13 Fuel pressure regulator
14 Electronic control unit (ECU)
15 Air pressure transducer (APT)
16 Thermostat housing
17 Temperature sensor
18 Thermal time switch
19 Fuel pump and pressure damper
20 Fuel pre-pump
21 Fuel accumulator
22 Fuel tank
23 Fuel filter
24 Injector
A Upper chamber pressure
B Lower chamber pressure
C Primary circuit pressure
D Injection pressure
E Unpressurized return line
F Pre-pump pressure

The purpose of these valves is to maintain a given pressure drop at the metering slits. The pressure differential between the two halves of the valve is maintained irrespective of the fuel flow.

The difference in fuel pressure between the upper and lower chambers (and therefore the metering slits) is approximately 0,2 bar (3 lbf/in²). It is determined by the helical spring and the EHA operating in the lower chamber of each valve.

The lower chambers are connected to one another by a ring main.

The upper chambers are completely sealed from one another but are connected to the metering slits. Each chamber contains a valve seat and is connected to its respective injector line.

If an increased fuel flow enters the upper chambers, the pressure is increased and the diaphragms are deflected downwards. This opens the outlet end of the injector lines allowing the fuel flow to increase until the preset differential pressure is restored.

If the fuel flow decreases, the pressure in the upper chambers will fall allowing the diaphragms to lift. This reduces the fuel flow to the injectors until the pressure differential again prevails.

The total travel of the diaphragm is only a few hundredths of a millimetre.

An additional fuel filter incorporating a separator for ferromagnetic contamination is fitted in the fuel line to the EHA.

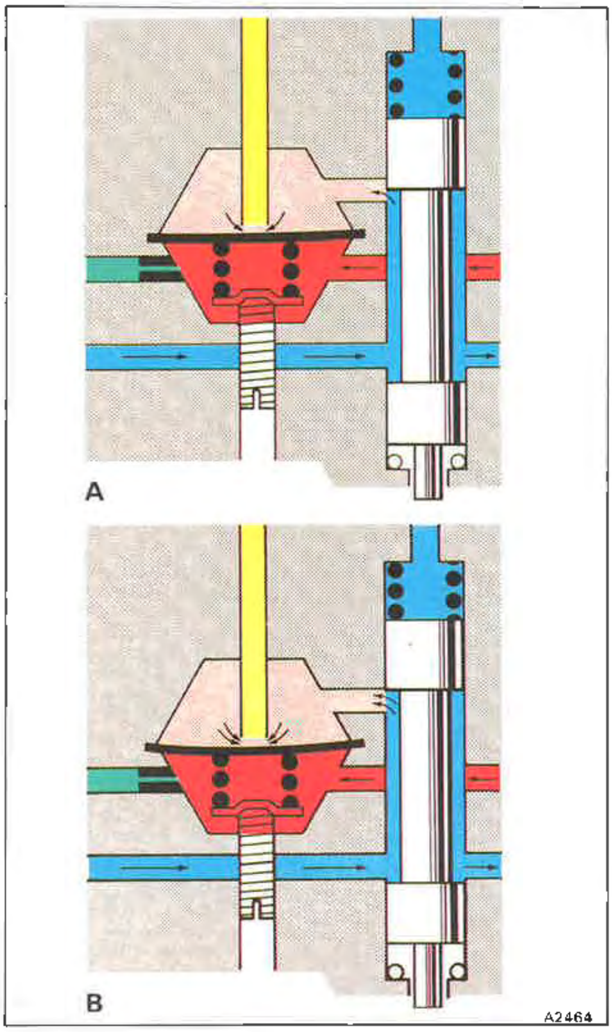

Fig. B3-5 Differential pressure valve
A Low flow rate
B High flow rate

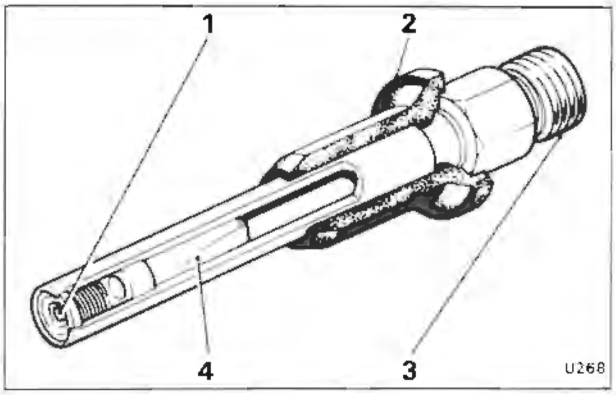

Fig. B3-6 Injector valve
1 Nozzle
2 Insulating sleeve
3 Fuel supply connection
4 Filter

Description of components

Fuel injector (see fig. B3-6)
A fuel injector is fitted into the inlet port just behind each inlet valve.

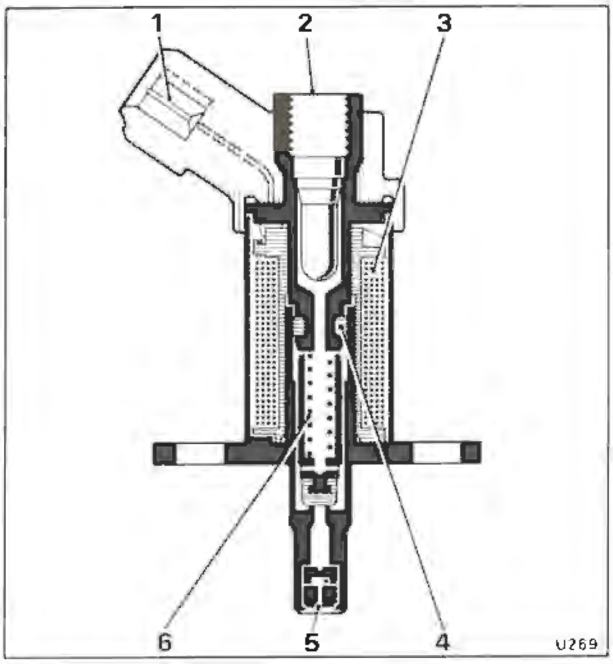

Fig. B3-7 Cold start injector
1 Electrical connection
2 Fuel inlet
3 Magnetic coil
4 Sealing ring
5 Swirl nozzle
6 Armature

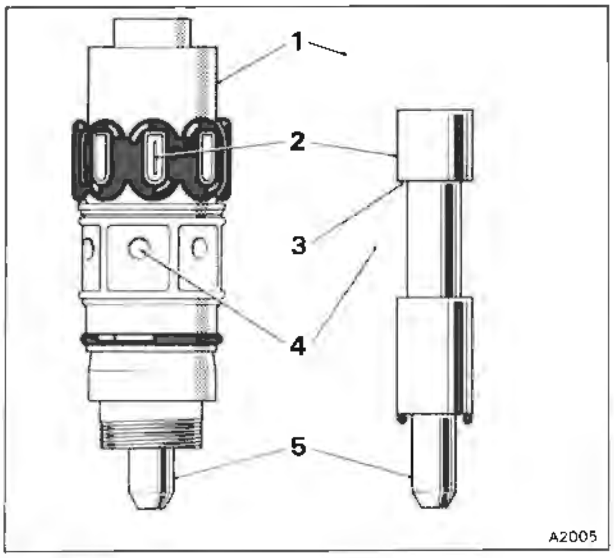

Fig. B3-8 Fuel distributor barrel and control piston
1 Fuel distributor barrel
2 Fuel metering slits
3 Piston control edge
4 Fuel inlet ports
5 Control piston

The injector opening pressure is between 3,8 bar and 4,0 bar (55.1 lbf/in² and 58.0 lbf/in²). It has no metering functions, its purpose being to continually spray finely atomized fuel under all running conditions.

The injector is supported in a specially moulded rubber sleeve. It is pressed (not screwed) into position. The hexagonal section is provided to hold the injector while the fuel line is attached.

A retention plate is fitted over the injector and secured by two small setscrews, each plate retaining two injectors.

Cold start injector (see fig. B3-7)
To facilitate engine starting when the coolant temperature is 35°C (95°F) or below, a cold start injector is fitted into the induction manifold. It sprays additional finely atomized fuel during engine cranking.

A thermal time switch mounted in the thermostat housing controls the operation of the injector.

Dependent upon coolant temperature the cold start injector ceases to operate when either the ignition key is released from the START position or if the engine fails to start within a period of up to a maximum of 8 seconds.

The cold start injector incorporates a helical spring which presses a moveable armature and seal against the valve seat, closing the fuel inlet. When the armature is energized (and therefore drawn upwards) the fuel port is opened and the pressurized fuel flows along the sides of the armature to the swirl nozzle.

Air flow sensor plate (see fig. B3-3)
The sensor plate is housed in the cone of the air meter. Its function is described on page B3-1, under the heading of Air flow sensing.

Differential pressure valves (see fig. B3-5)
The differential pressure valves (one for each engine cylinder) are housed in the fuel distributor. Their function is described on page B3-3 under the heading of Differential pressure valves.

Fuel distributor (see fig. B3-3)
The fuel distributor forms part of the mixture control unit. Its function is described in the section relating to fuel distribution on page B3-3.

Control piston (see fig. B3-8)
This is a cylindrical plunger type of valve that moves vertically in the fuel distributor. It is operated by a lever connected to the air flow sensor plate.

A precision machined edge on the control piston uncovers the fuel metering slits in the fuel distributor barrel. This controls the amount of fuel injected into the engine cylinders.

Fuel pressure regulator (see fig. B3-9)
When the engine is operating primary fuel pressure is maintained by the fuel pressure regulator.

Fuel enters the regulator via the port on the right-hand side. Fuel returning from the fuel distributor enters the regulator via the connection on the left-hand side. The fuel return line (to the tank) is situated at the bottom of the assembly.

The fuel pump generates pressure in the system which forces the regulator control diaphragm upwards. The pressure of the counter-spring forces the valve body to follow the diaphragm until it abuts a stop. This enables the pressure control function to commence.

The fuel returning from the fuel distributor (comprising the fuel flowing through the pressure actuator plus the control piston leakage) can now flow back through the open valve seat to the fuel tank, together with any excess fuel supplied.

When the engine is switched off, the fuel pump stops and the system pressure drops. The plate valve moves downwards pushing the valve body downwards against the force of the counter spring until the seal closes the return to the tank. The pressure in the system then falls rapidly to just below the injector valve opening pressure, with the result that the injectors close.

The system pressure then increases again to a value determined by the fuel accumulator.

Anti-suction spring

When the engine is switched off and starts to cool, it is possible for some fuel to vapourize. This can cause a depression above the control piston as the fuel condenses. The result being a tendency for the piston to be drawn upwards in the barrel by the vacuum effect. In these conditions an excessively rich mixture would be fed to the engine when it is again started.

To prevent this a spring is fitted into the fuel distributor above the control piston. The applied force of the spring on the piston, prevents it being drawn upwards in the barrel.

Air pressure transducer (APT) (see fig. B3-10)

The air pressure transducer monitors induction manifold pressure, primarily to provide information for the KE2-Jetronic fuel injection system ECU. The ECU will then compensate for positive induction manifold pressure.

The transducer also provides additional instantaneous boost pressure information for the knock sensing boost control system.

Idle speed adjustment screw (see fig. B3-11)

This adjustment screw allows limited adjustment of the engine idle speed.

Idle speed control solenoid (see fig. B3-11)

The transmission load associated with engaging any forward gear would normally cause the engine idle speed to decrease.

To compensate for this a solenoid valve is opened (energized) when the gear range lever is moved to select a forward gear. This allows intake air to by-pass the throttles and maintain the idle speed at the correct setting.

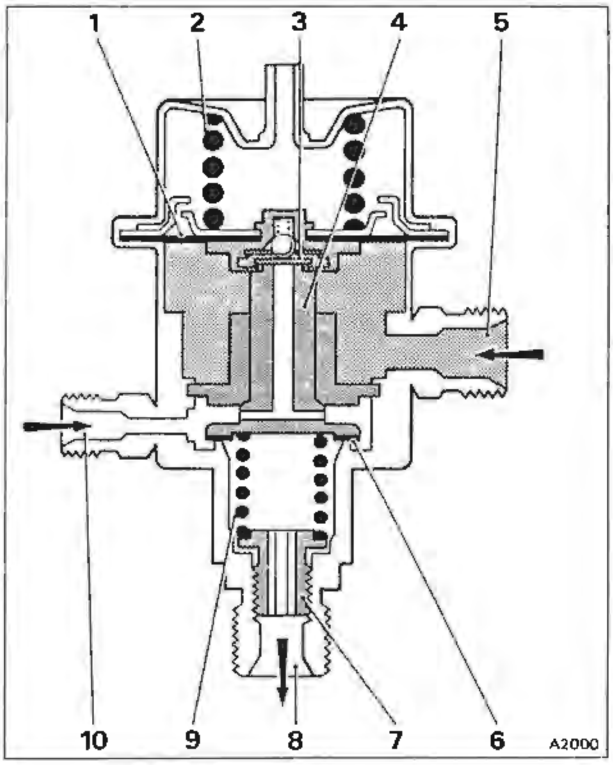

Fig. B3-9 System pressure regulator

1	Diaphragm
2	Control spring
3	Valve plate
4	Valve body
5	Inlet
6	Seal
7	Adjustment screw
8	To fuel tank
9	Counterspring
10	From fuel distributor

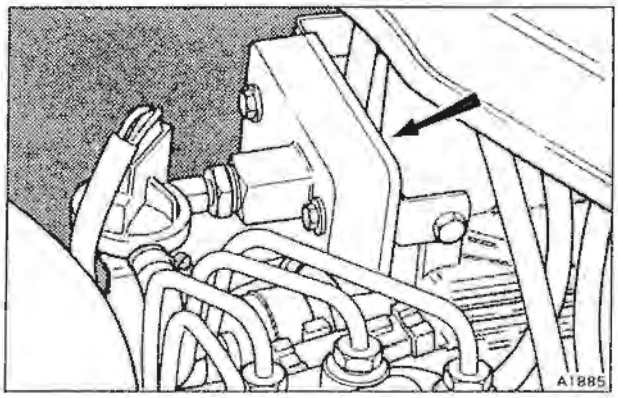

Fig. B3-10 Air pressure transducer

Note An uncorrected reduction in engine idle speed resulting from reverse gear being engaged for prolonged periods is not representative of normal engine operation.

Auxiliary air valve (see figs. B3-1 and B3-12)
To compensate for the richer mixture and increased friction when the engine is cold, an auxiliary air valve is fitted. This valve supplies a larger volume of air to the engine than is dictated by the position of the throttle butterfly valves. The air passes through a pivoted blocking plate orifice situated between the inlet and outlet connections of the valve. The movement of the blocking plate is dependent upon an electrically heated bi-metal strip.

When starting the engine the initial position of the blocking plate is determined by ambient temperature. However, as the bi-metal strip warms-up it progressively releases its force on the plate, allowing the return spring to pull the plate to the closed position. This gradually reduces the engine speed to the normal idle setting during the warm-up phase.

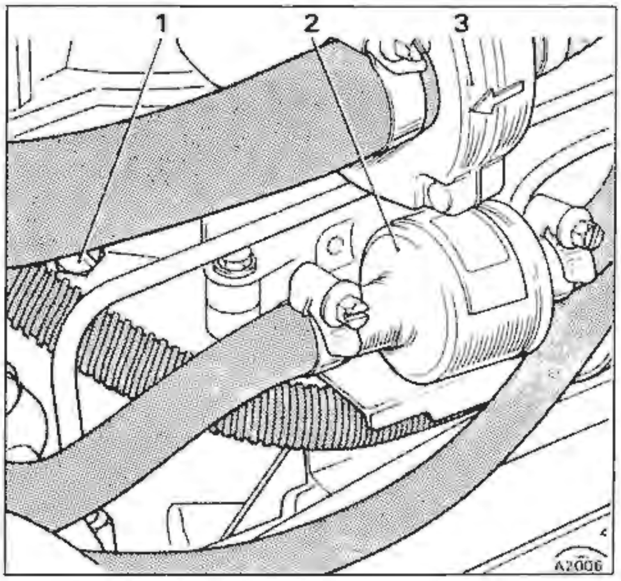

Fig. B3-11 **Idle speed adjustment screw**
1 Idle speed adjustment screw
2 Idle speed control solenoid
3 Auxiliary air valve

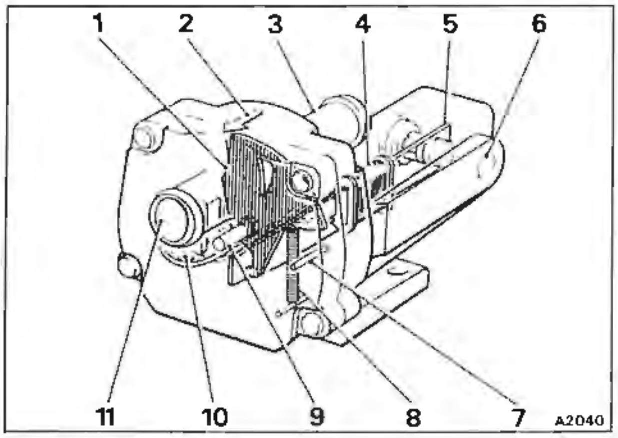

Fig. B3-12 **Auxiliary air valve**
1 Blocking plate
2 Airflow direction
3 Upstream throttle connection
4 Heating coil
5 Bi-metallic strip
6 Clamping pin
7 Blocking plate limit stop
8 Return spring
9 Pivot pin
10 Heating coil connection block
11 Downstream throttle connection

Thermal time switch (see fig. B3-13)
This switch limits the length of time that the cold start injector operates.

The switch is situated in the thermostat housing. It activates the cold start injector whenever the engine is being cranked and the coolant temperature is 35°C (95°F) or below. An electrically heated bi-metal inside the switch limits its operation to a maximum of 8 seconds dependent upon coolant temperature.

Coolant temperature sensor (see fig. B3-14)
The coolant temperature sensor is located in the thermostat housing and monitors engine coolant temperature.

When the engine is cold the internal resistance values of the sensor prompt the ECU to signal the EHA to provide the mixture enrichment necessary during the engine warm-up phase.

The coolant temperature sensor is also used to provide information for the EZ 58F digital ignition system.

Throttle position switch (see fig. B3-15)
This switch is mounted on the side of the throttle body on the primary throttle spindle.

The switch identifies idle, part load, and full load engine operation for the KE2-Jetronic and the EZ 58F ECU respectively.

Air flow sensor potentiometer (see fig. B3-16)
This assembly has three electrical pin connectors labelled 14, 17, and 18 in addition to a plastic location pin.

The potentiometer monitors the air flow by detecting the rate of air sensor plate movement. This enables the fuel injection system ECU to provide acceleration enrichment provided that the coolant temperature is 70°C (158°F) or below.

Under these conditions if the throttles are opened quickly, the air/fuel mixture is momentarily weakened and a short period of mixture enrichment is required, to ensure good transitional response.

The potentiometer is attached to the air flow sensor plate lever and reflects any change in the amount of metered air entering the induction system. The electrical signal generated within the potentiometer by the movement of the sensor plate, is then passed to the fuel injection ECU.

Any change necessary to the engine fuelling requirements is calculated by the ECU and a corresponding signal is transmitted to the EHA, to momentarily richen the air/fuel mixture.

Electro-hydraulic actuator (EHA) (see fig. B3-19)
This assembly incorporates two polarity conscious electrical pin connectors in addition to a plastic location pin. The plastic location pin ensures that reversal of the pin connectors does not occur.

Depending upon the signals received from the ECU (i.e. information as to the operating conditions of the engine) the EHA varies the fuel flow to the lower chambers of the differential pressure valves.

An increase or decrease in the milliamps (mA) supply from the ECU to the EHA will result in a corresponding change in the fuel flow to the injectors and hence the CO concentration.

This alteration in mixture strength is not related directly to any mechanical air flow measurement.

KE2-Jetronic electronic control unit (ECU)
(see fig. B3-20)
This unit evaluates input data from various engine mounted sensors. With this information it generates a control signal in milliamps (mA) for the EHA. This provides electronic fuelling correction for start, post start, warm-up, acceleration enrichment, and positive induction manifold pressure compensations.

Increasing the mA supply to the EHA increases the exhaust CO concentration.

Modes of operation
The basic operation of this system is similar to the K-Jetronic system. However, the KE2-Jetronic system has the added refinement of electronic control over the air/fuel mixture.

The fuel injection system ECU evaluates the signals it receives from the various sensors. From this data it calculates the compensation instructions [in milliamps (mA)] for the EHA. It then conveys this information to the actuator via a 2-way plug.

Increasing the mA compensation to the EHA increases the exhaust CO concentration (i.e. it reduces the air/fuel ratio thus enriching the mixture).

The mA correction for the various engine operating modes are as follows.

Basic compensation
With the engine coolant temperature at 80°C (176°F) or above, the EHA is supplied with a basic compensation value of between 5.5 mA and 6.5 mA.

Correct idle mixture strength (CO setting) is achieved with the mechanical adjustment to the fuel mixture control unit and the basic mA compensation.

Start enrichment
Under all starting conditions, irrespective of engine coolant temperature, a start enrichment pulse valve of 150 mA for a duration of 1.5 seconds is provided.

Under most cold starting/ambient temperatures this start enrichment pulse will overlap from engine start to engine run modes. It will override all other enrichment factors for the 1.5 seconds duration.

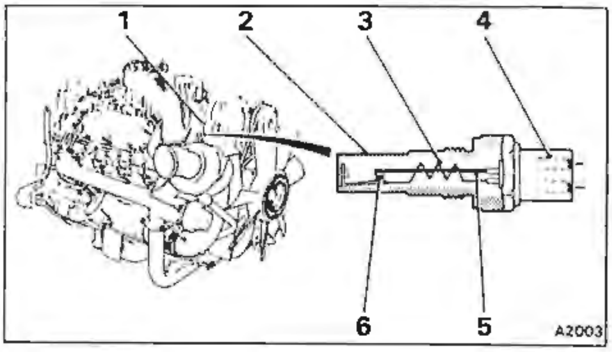

Fig. B3-13 Thermal time switch
1 Thermostat housing outlet
2 Housing
3 Heating coil
4 Plug connector
5 Bi-metallic strip
6 Contacts

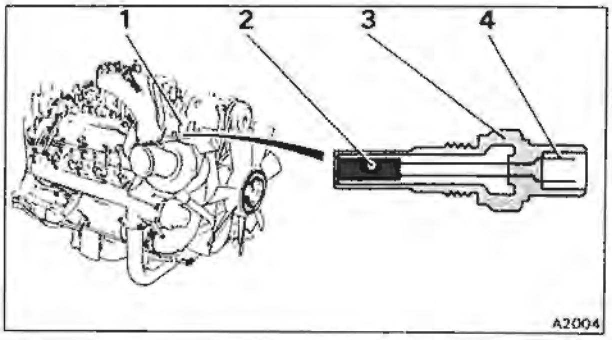

Fig. B3-14 Coolant temperature sensor
1 Thermostat housing outlet
2 Resistor
3 Housing
4 Plug connector

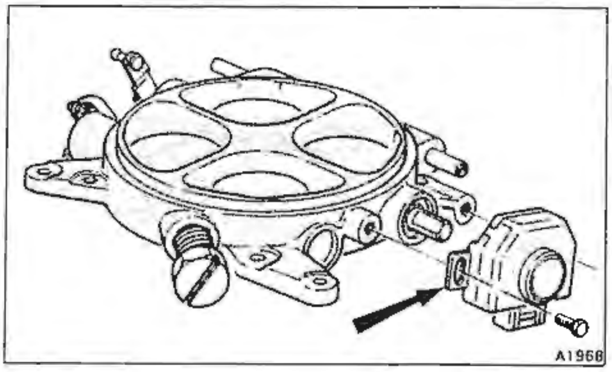

Fig. B3-15 Throttle position switch

After start enrichment
Following engine start, an after start enrichment feature is present for approximately 10 seconds. This is to assist engine running, primarily during fuel

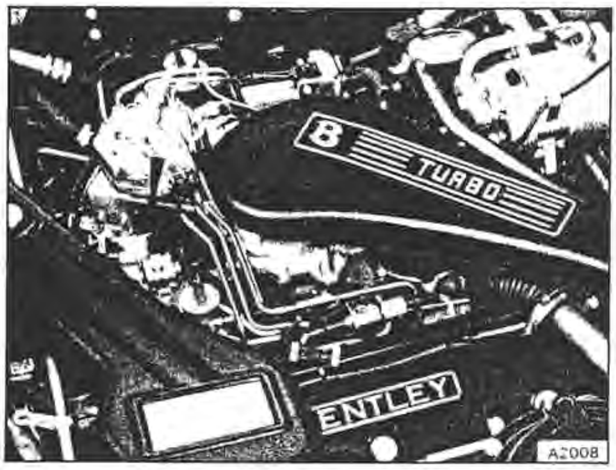

Fig. B3-16 **Air flow sensor potentiometer**

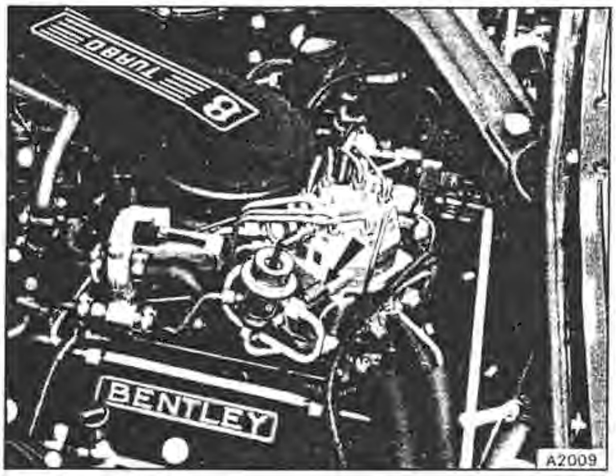

Fig. B3-17 **Electro-hydraulic actuator**

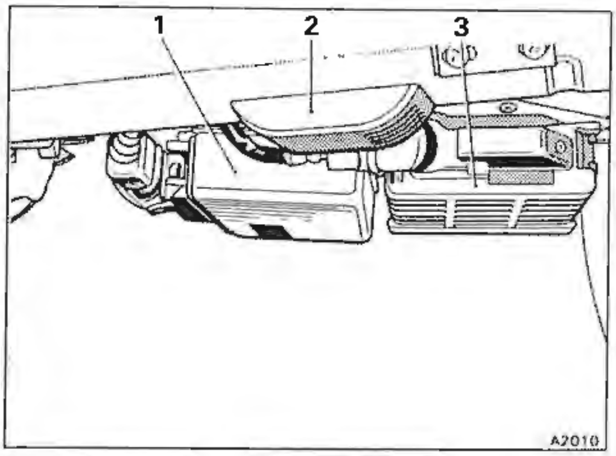

Fig. B3-18 **Electronic control unit (ECU) – right-hand footwell**

1 Ignition system ECU
2 Knee roll sensor (left-hand drive cars)
3 Fuel injection system ECU

injector stabilization. The after start mA compensation value is coolant temperature dependent and is in addition to the warm-up and basic compensation values.

An example of this is given after this section and a service graph is provided in the system checking procedure.

Warm-up enrichment
This feature is solely coolant temperature dependent and is in addition to the after start and basic compensation.

An example of this is given after this section and a service graph is provided in the system checking procedure.

Acceleration enrichment
During the warm-up phase acceleration enrichment is present dependent upon the rate of air flow sensor plate movement, until a coolant temperature of 70°C (158°F) is exceeded.

Enrichment takes the form of mA compensation. It is added to all other warm-up and after start features except start enrichment.

Once the maximum rate of air sensor plate movement has been reached, an increase in mA corresponding to acceleration enrichment reaches its peak value and fades away within one second.

Examples
Examples of cold start and warm start are as follows. The information is taken from the graphs provided in the system checking procedure.

Cold start

1 Cold Start at – 10°C (14°F)
  Start enrichment = 150 mA for 1.5 seconds
2 Engine starts
  After start enrichment = 29 mA
  Warm-up enrichment = 39 mA
  Basic compensation = 6 mA

  Total 74 mA

3 Approximately 10 seconds after starting
  After start enrichment = ceases
  Warm-up enrichment = 39 mA
  Basic compensation = 6 mA

  Total 45 mA

Warm start

1 Warm start at above 80°C (176°F)
  Start enrichment = 150 mA for 1.5 seconds
2 Engine starts
  After start enrichment = Nil
  Warm-up enrichment = Nil
  Basic compensation = 6 mA

  Total 6 mA

Engine speed limiting
A feature of the KE2-Jetronic fuel injection system, is that it limits the maximum speed of the engine. This it achieves by the ECU intermittently reversing the pin polarity of the EHA.

At a maximum engine speed of between 4500 rev/min and 4700 rev/min, the ECU intermittently reverses the current flow through the EHA. Whilst the current is reversed, the EHA drops the fuel pressure in the differential pressure valves which results in the valve diaphragms closing the injector line outlets.

The overall effect, is that the maximum speed of the engine is limited by the injectors only spraying fuel intermittently.

Electronic components
The theoretical wiring diagram (see fig. B3-19) provides basic details of the electrical components within the fuel injection system.

The description of the circuit provides service personnel with the basic knowledge necessary to identify the possible areas of faults.

Electrical feeds to the **engine running sensor** (item 5) are from the starter along the brown/black cable, from the **fuel injection fuse** (item 4) along the pink cable, and from the **ignition fuse** (item 6) along the white cable. The assembly senses whether the engine is stationary, cranking, or running.

The white cable also feeds the **fuel injection relay** windings (item 7), so that whenever the ignition is switched on the relay is energized. A 12 volts feed is then allowed along the brown cable, through the fuse and relay, to the white/purple cable on terminal 1 of the **electronic control unit** (item 10).

The **electro-hydraulic actuator** (item 8) and the **air sensor potentiometer** (item 9) are powered by and feed information to the electronic control unit along their respective colour coded cables.

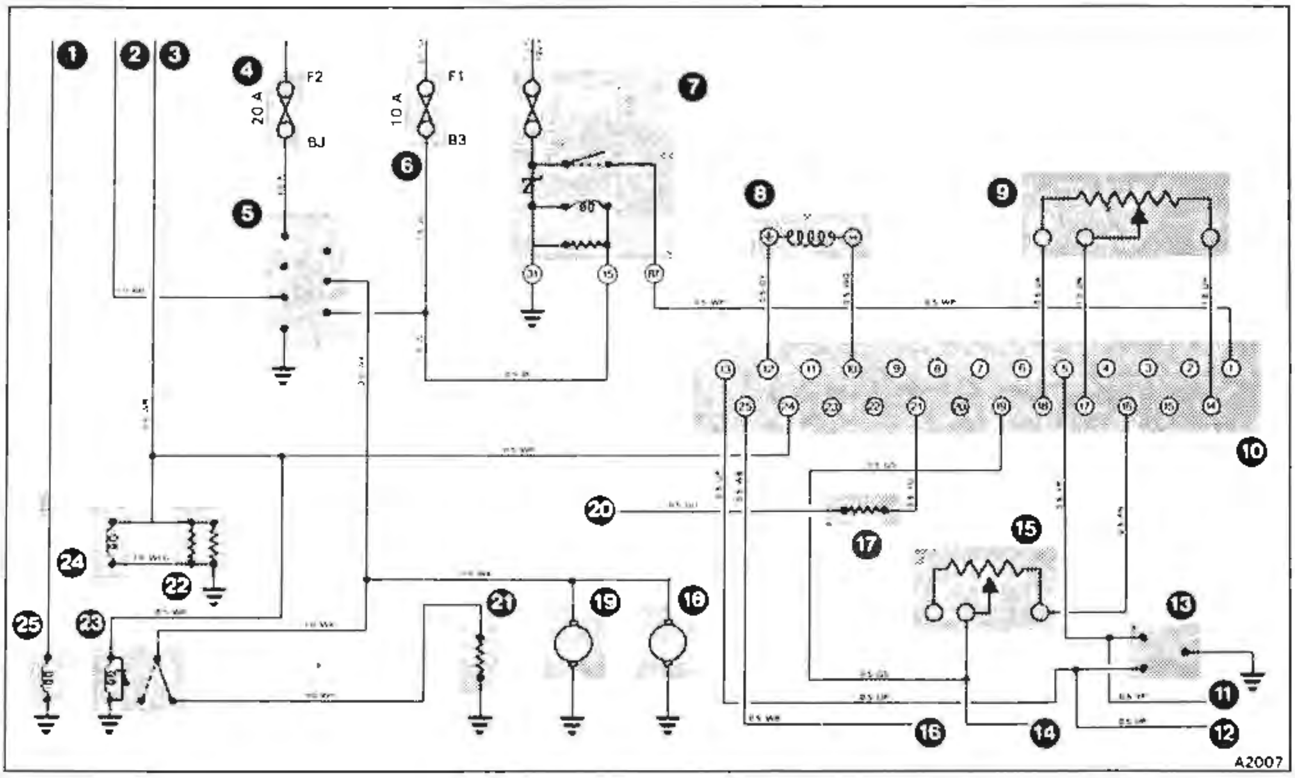

Fig. B3-19 **Theoretical wiring diagram**

1 From gearchange actuator
2 From starter
3 From gearchange actuator
4 Fuel injection fuse
5 Engine running sensor
6 Ignition fuse
7 Fuel injection control relay (with integral fuse)
8 Electro-hydraulic actuator
9 Air flow sensor potentiometer
10 Electronic control unit
11 To ignition system ECU
12 To ignition system ECU
13 Throttle position switch
14 To knock sensor ECU
15 Air pressure transducer
16 To ignition system ECU (engine speed)
17 Coolant temperature sensor
18 Fuel pump
19 Fuel pre-pump
20 To ignition system ECU
21 Auxiliary air valve heater
22 Thermal time switch
23 Inhibit relay
24 Cold start injector
25 Idle speed control solenoid

A similar situation applies to both the **air pressure transducer** (item 15) and the **throttle position switch** (item 13). Both components exchange electrical information with the electronic control unit along their respective cables. However, these two components are also involved in the operation and control of the boost control system (knock sensing) and the ignition system (timing mapping).

The **coolant temperature sensor** (item 17) is a variable resistance. Therefore, as the coolant temperature increases, it alters the value of the electrical signal transmitted to the electronic control unit. The ignition system is also affected by this sensor.

The **main fuel pump** (item 18) and the **pre-pump** (item 19) are both energized along the white/pink cable from the engine running sensor.

The **auxiliary air valve** (item 21) is also fed by the white/pink cable, through the **heater inhibit relay** (item 23), and along the white/yellow cable. However, during engine cranking, the white/red cable energizes the inhibit relay which interrupts the feed to the auxiliary air valve.

The white/red cranking feed also supplies power to the **cold start injector** (item 24) and to the **thermal time switch** (item 22). The earth for these two components is interrupted whenever the temperature of the thermal time switch is above a predetermined setting. This cranking feed is also supplied to the electronic control unit.

The **idle speed control solenoid** (item 25) receives its signal along the green/blue cable whenever the gearchange actuator is in any forward position.

Workshop safety precautions

General

Always ensure that the vehicle parking brake is firmly applied, the gear range selector lever is in the park position and the gearbox isolator fuse is removed from the fuseboard.

A number of the nuts, bolts, and setscrews used in the fuel injection system are dimensioned to the metric system, it is important therefore, that when new parts become necessary the correct replacements are obtained and fitted.

Additional information when working on the KE2-Jetronic system

1. Do not start the engine unless the battery connections are securely fastened.
2. Do not disconnect the battery from the vehicle electrical system when the engine is running.
3. Do not charge the battery whilst it is installed in the vehicle.
4. Always remove the KE2-Jetronic ECU before carrying out any electrical welding work.
5. Always ensure that all wiring harness plugs are securely connected.
6. Do not disconnect or connect the wiring harness 25-way multiple plug of the KE2-Jetronic ECU with the ignition switched on.

Fire

Fuel is highly flammable, therefore great care must be exercised whenever the fuel system is opened (i.e. pipes or unions disturbed) or the fuel is drained. Always ensure that 'no smoking' signs and foam, dry powder, or CO_2 (carbon dioxide) fire extinguishers are placed in the vicinity of the vehicle.

Always ensure that the battery is disconnected before opening any fuel lines.

If the fuel is to be drained from the tank, ensure that it is siphoned into a suitable covered container.

Fuel pressure

The fuel injection system contains fuel that may be under high pressure approximately 5,7 bar to 5,9 bar (82.65 lbf/in^2 to 85.55 lbf/in^2). Therefore, to reduce the risk of possible injury and fire, always ensure that the system is depressurized by one of the following methods before commencing any work that will entail opening the system.

a. Clean the inlet connection to the fuel filter. Wrap an absorbent cloth around the joint and carefully slacken the pipe nut to release any pressurized fuel from the system. Tighten the pipe nut.

b. Allow the pressure to fall naturally by switching off the engine and allowing the vehicle to stand for four hours before opening the system.

Exhaust gases

In addition to the usual dangers associated with exhaust gases, the following should also be noted.

Whenever it is necessary to run a turbocharged engine within the confines of a workshop for any length of time (i.e. to carry out certain tests), always ensure that the exhaust gases are suitably piped to the outside.

Under no circumstances should exhaust gas extraction units be applied directly to the tailpipes.

Health risk

Fuel may contain up to 5% of benzene as an anti-knock additive. Benzene is extremely injurious to health (being carcinogenic) therefore, **all contact should be kept to an absolute minimum, particularly inhalation.**

Fuel has a sufficient high vapour pressure to allow a hazardous build-up of vapour in poorly ventilated areas. Fuel vapour is an irritant to the eyes and lungs, if high concentrations are inhaled it may cause nausea, headache, and depression. Liquid fuel is an irritant to the eyes and skin and may cause dermatitis following prolonged or repeated contact.

When it becomes necessary to carry out work involving the risk of contact with fuel, particularly for prolonged periods, it is advisable to wear protective clothing including safety goggles, gloves, and aprons. Any work should be carried out in a well ventilated area.

If there is contact with fuel the following emergency treatment is advised.

Ingestion (swallowing)

Do not induce vomiting. Give the patient milk to drink

Figure B3-20

Fuel injection system – electrical test programme – fault diagnosis flow chart

Sheet 1 of 2

Bosch KE2-Jetronic fuel injection system electrical test programme

Electro-hydraulic actuator (EHA) – measuring internal resistance
Remove the multiple plug from the fuel injection ECU and measure the resistance between pins 10 and 12 (white/orange and orange/blue). The reading should be between 18 and 22 ohms
Is the reading within specification?

NO

Test for continuity or an earth fault in the cables from pins 10 and 12 in the loom socket to the electro-hydraulic actuator 2 pin plug. If the wiring is found to be satisfactory, the electro-hydraulic actuator is faulty

YES

Coolant temperature sensor – measuring internal resistance
Remove the multiple plugs from the fuel injection and ignition system electronic control units. Measure the resistance between pins 15 and 21 (black/pink and yellow/blue on the fuel injection system ECU plug (see illustration A for the correct reading)
Is the reading within specification?

NO

If the resistance measured is 'infinity', test for an open circuit in the cables from pins 15 and 21. If '0' ohms, check for an earth fault between pin 21 and the temperature sensor. If the resistance measured is outside the specification given in illustration A, the coolant temperature sensor is faulty.
Note If the 2-way connector to the coolant temperature sensor becomes disconnected, this will cause the mA supply to the electro-hydraulic actuator to increase. This will result in the mixture strength going rich, sufficient to cause a warm engine to cut-out

YES

Operation of the throttle position switch – idle mode
Remove the multiple plugs from the fuel injection and ignition system electronic control units. Measure the resistance between pins 13 and 15 (blue/purple and black/pink) on the fuel injection system ECU plug.
The readings should be as follows
Throttle plates closed – 0 to 0.5 ohms
Throttle plates open – 'infinity'
(switching point – just off idle – audible 'click')
Are the readings within specification?

YES

Operation of the throttle position switch – full load mode
Remove the kick-down relay (to prevent feed-back). Remove the multiple plugs from the fuel injection and ignition system electronic control units. Measure the resistance between pins 5 and 15 (yellow/purple and black/pink) on the fuel injection ECU
The reading should be as follows
Throttle plates closed – 'infinity'
Throttle plates fully open – 0 to 0.5 ohms
(switching point – just before full throttle – no 'click')
Are the readings within specification?

NO

Test for the readings directly at the throttle position switch. If the readings are still outside the specification, the switch is faulty or incorrectly adjusted. Also check the throttle linkage for sticking. If the switching function is satisfactory, test for an open circuit in the cables

YES

Starting signal
Remove the multiple plug from the fuel injection system ECU. Measure the voltage between pins 15 and 24 (black/pink and white/red). Operate the starter motor briefly. The reading should be 8 to 15 volts
Is the reading within specification?

NO

Trace the white/red cable from pin 24 of the fuel injection system ECU and check for an open circuit. Also check for continuity between pin 15 and earth

YES

Engine speed signal
Remove the cover from the fuel injection ECU multiple plug and with the plug connected, measure the voltage between pins 15 and 25 (black/pink and white/black). Start the engine. Check for 11.5 volts ± 0.5 at 1000 rev/min. Check for 7.5 volts ± 0.5 at 3000 rev/min
Are the readings within specification?

NO

Check for an open circuit in the white/black lead from pin 16 on the ignition system ECU to pin 25 on the fuel injection ECU. If no fault is found, the ignition system ECU is faulty

YES

Power supply for the fuel injection system ECU
Remove the multiple plug from the fuel injection system ECU. Switch on the ignition and measure the voltage between pins 1 and 15 (white/purple and black/pink). The reading should be 8 to 14 volts
Is the reading within specification?

NO

Test for an open circuit in the white/purple lead from pin 1 on the ECU plug to the fuel injection system control relay. The relay is situated under the bonnet next to the right-hand blower motor. If no fault is found, check the relay fuse (replace if necessary). If the fuse is satisfactory change the relay. If both the above tests are satisfactory, test for an open circuit in the lead from the control relay to the brown battery feed. Also, check for an open circuit on the fuel injection control relay earth (terminal 31 on the relay)

YES

Power supply for the air flow sensor potentiometer
Ensure the ignition is switched off. Re-connect the multiple plug to the fuel injection system ECU. Switch on the ignition. Remove the 3 pin electrical connection to the air flow sensor potentiometer. Measure the voltage across pin 1 (blue/yellow) and pin 3 (blue/pink) on the connector. The reading should be between 7.5 and 8.0 volts
Is the reading within specification?

NO

With the multiple plug connected, test for between 7.5 and 8.0 volts directly at the fuel injection ECU pins 14 and 18 (blue/yellow and blue/pink). If the reading is now satisfactory, test for an open circuit in the leads from the ECU to the potentiometer. If the reading is still outside the specification, the ECU is faulty

YES

Continued on sheet 2

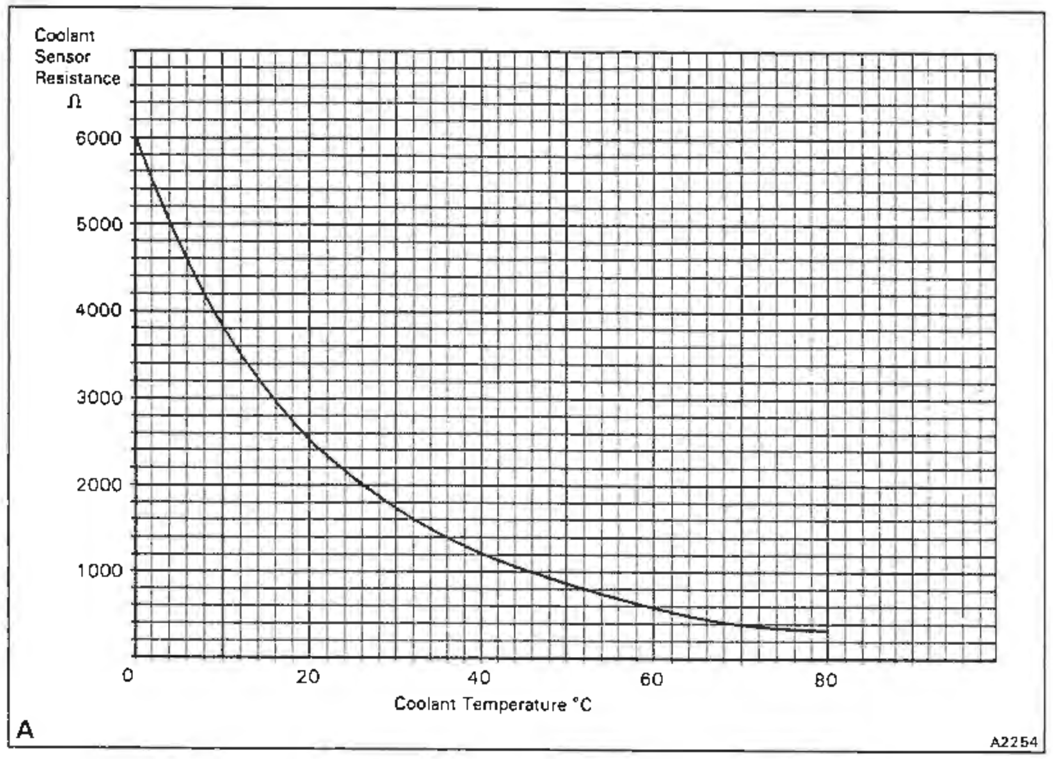

Figure B3-20

Fuel injection system – electrical test programme – fault diagnosis flow chart

Sheet 2 of 2

Continued from sheet 1

Signal from the air flow sensor potentiometer
Re-connect the multiple plug to the fuel injection ECU. Switch on the ignition. Re-connect the 3 pin connector to the air flow sensor potentiometer. Using probes, measure the voltage across pin 1 (blue/yellow) and pin 2 (blue/brown). With the air duct to the airmeter removed, depress the air flow sensor plate. The voltage reading should progressively increase from a baseline of zero volts (with increasing air sensor plate deflection) up to a maximum of between 7.5 and 8.0 volts
Is the reading within specification?

NO

YES

Test for an open circuit in the leads from the fuel injection ECU to the 3 pin potentiometer connector. If no fault is found, test the potentiometer for an open circuit directly at the 3 connection pins as follows. Remove the 3 pin connector from the potentiometer. With the ignition off, measure the resistance across the following leads

Cable colour	Sensor plate position	Resistance
Blue/yellow – blue/pink	Closed (idle)	4.2 to 4.4 k/ohms
Blue/brown – blue/pink	Closed (idle)	4.9 to 5.2 k/ohms
Blue/brown – blue/pink	Closed (idle)	4.9 to 5.2 k/ohms
Blue/yellow – blue/pink	Fully open	4.2 to 4.4 k/ohms
Blue/brown – blue/pink	Fully open	0.8 to 1.0 k/ohms

Are the readings within specification?

NO

If the readings are outside the given specification, the potentiometer is faulty

YES

'Starting', 'Post start', and 'Warm-up' enrichment functions
Connect a digital multimeter (with a range of 0 to 150 milliamps) in series with the electro-hydraulic actuator using the adapter RH 9893 (see fig. B3-23). Whilst observing the multimeter, start the engine. The enrichment should initially peak at 150 mA for approximately 1.5 seconds and then progressively decay to 6 mA ± 0.5 mA when the engine has reached its normal running temperature [80°C (176°F) coolant temperature]

YES

NO

Normal operating conditions – 'hot idle'
With the engine idling at 580 rev/min and a coolant temperature of 80°C (176°F) i.e. fully warmed-up, check that the milliamp supply to the electro-hydraulic actuator is 6 mA ± 0.5 mA
Is the reading within specification?

NO

If the reading is outside the given specification, (and all the preceding tests in this programme have been carried out), the fuel injection ECU is faulty. If no reading is obtained, check for an open circuit or an earth fault in the leads from pins 10 and 12 (white/orange and orange/yellow) on the fuel injection ECU to the electro-hydraulic actuator

YES

'Full load' correction
Ensure that the multiple plug to the fuel injection ECU is connected. Disconnect the 3-way electrical connection to the throttle position switch. Using a suitable piece of wire with the appropriate minature 'TTS' type connectors, bridge the black and yellow/purple connections in the ECU side of the 3-way connector.
The milliamp supply to the electro-hydraulic actuator will now be governed by the full load fuelling 'map' see illustration B for the correct specification.
Note The engine must run above the idle speed setting for this test
Are the readings within specification?

NO

Test for an open circuit in the leads from the 3-way electrical connector to the fuel injection ECU. If no fault is found, test for an open circuit in the white/black cable from pin 16 on the ignition system ECU to pin 25 on the fuel injection ECU. If no fault is found, the fuel system and/or the ignition system ECU is faulty

YES

Boost pressure correction
Ensure that the multiple plug is connected to the fuel injection ECU. Switch on the ignition. Remove the 3-pin electrical connector from the air pressure transducer. Measure the voltage across the purple/brown and black cables (see illustration C). The reading should be 5 volts ± 0.5 volts
Is the reading within specification?

NO

Check for 5 volts ± 0.5 volt across pin 16 (purple/brown) on the fuel injection ECU and earth (do this with the ECU plug connected). If the voltage is now satisfactory, check for an open circuit between pin 16 (purple/brown) on the fuel injection ECU and pin 1 on the air pressure transducer connector. Also, check earth continuity of the black cable in the air pressure transducer connector

YES

Replace the 3 pin electrical connector and measure the voltage across the green/slate and black cables (see illustration C). The reading should be 2.46 volts ± 0.5 volts
Is the reading within specification?

NO

Test for an open circuit in the green/slate cable from pin 19 on the fuel injection ECU to the air pressure transducer connector.
If the above is satisfactory, and there is no blockage or restriction in the manifold to transducer signal pipe, the air pressure transducer is faulty

YES

Idle adjustment checks
Check the idle mixture strength and idle speed. Refer to the Bosch KE2-Jetronic fuel injection system – Engine tuning procedure

Tests complete

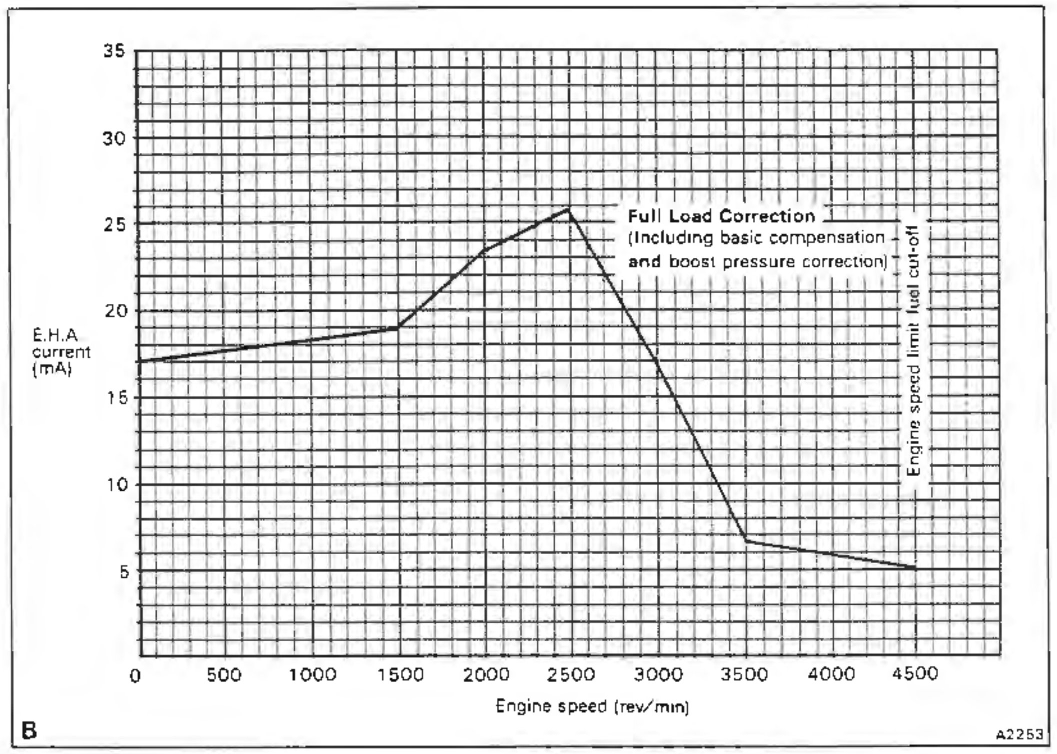

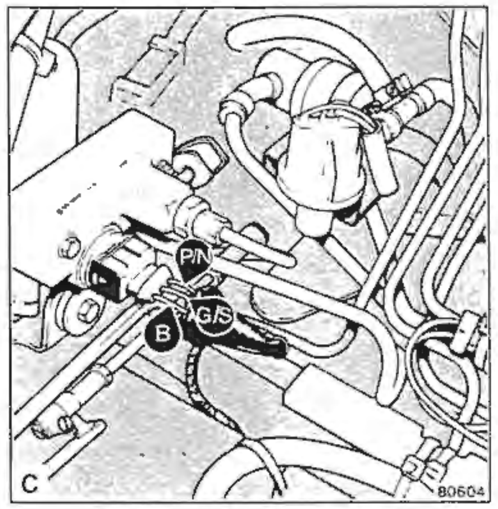

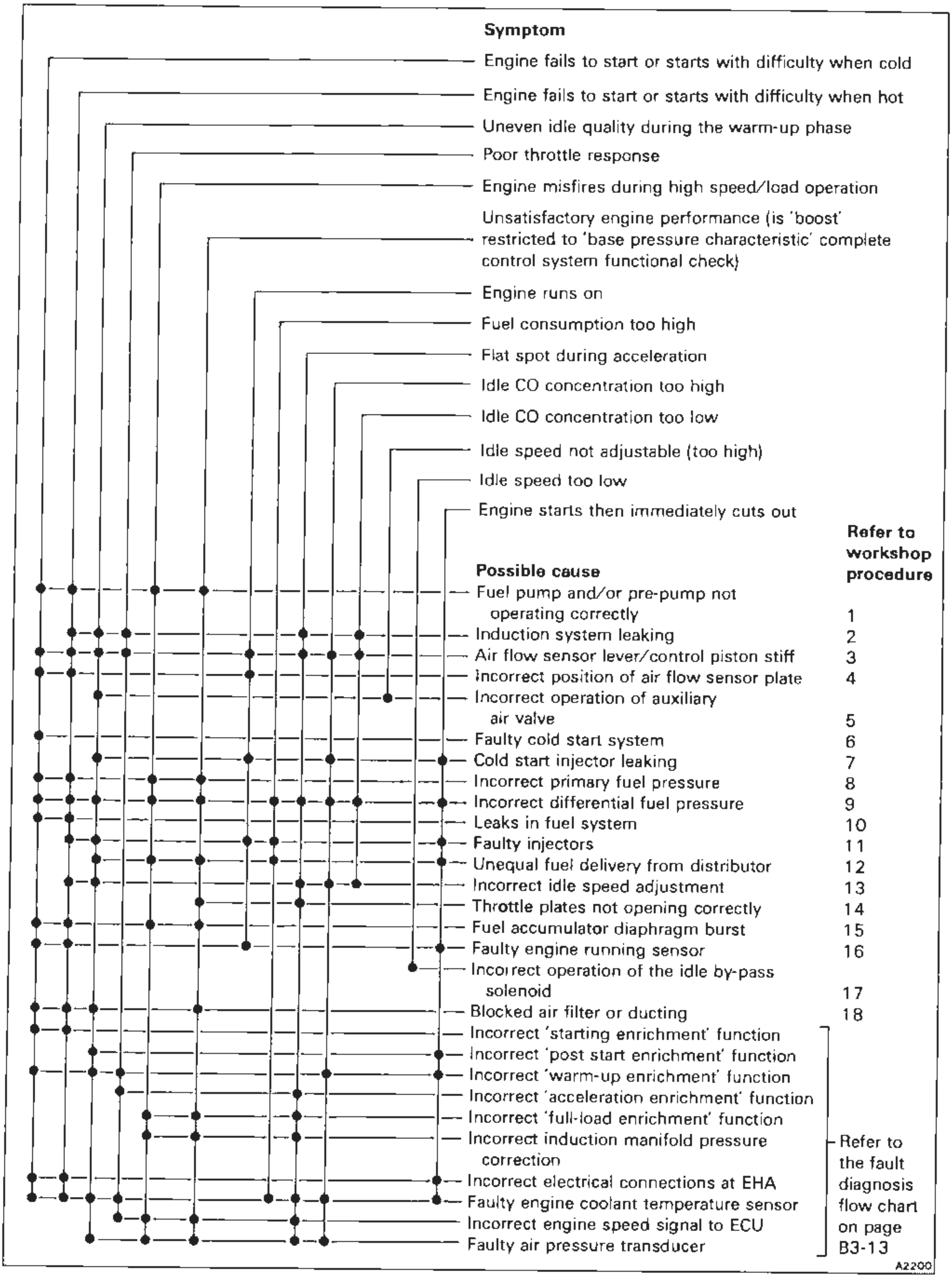

Fig. B3-21 **Basic KE2-Jetronic fault diagnosis chart**

(if none is available water can be given). The main hazard after swallowing fuel is that some of the liquid may get into the lungs. Send the patient to hospital immediately.

Eyes
Wash with a good supply of clean water for at least 10 minutes.

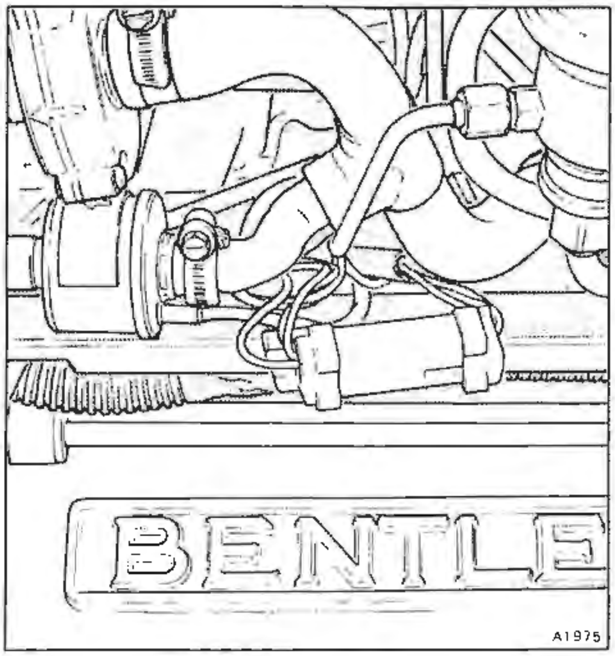

Fig. B3-22 Throttle position switch electrical connection

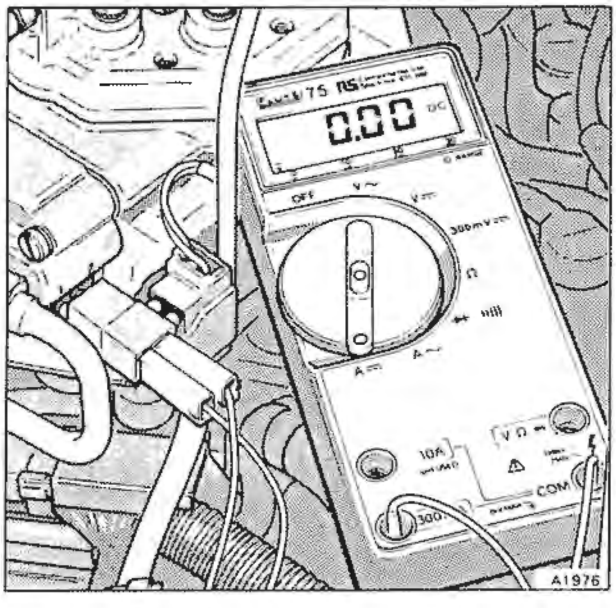

Fig. B3-23 Multimeter connected in 'series' with the EHA

Skin contact
Immediately drench the affected parts of the skin with water. Remove contaminated clothing and then wash all contaminated skin with soap and water.

Inhalation (breathing in vapour)
Move the patient into the fresh air. Keep the patient warm and at rest. If there is loss of consciousness give artificial respiration. Send the patient to hospital.

Cleanliness
It is extremely important to ensure maximum cleanliness whenever work is carried out on the system.

The main points are.

1. To prevent the ingress of dirt, always clean the area around a connection before dismantling a joint.
2. Having disconnected a joint (either fuel or air) always blank off any open connections as soon as possible.
3. Any components that require cleaning should be washed in clean fuel and dried, using compressed air.
4. If it is necessary to use a cloth when working on the system, ensure that it is lint-free.

Fault diagnosis

This fault diagnosis section includes.

Basic system test procedure.

Electrical and Electronic components fault diagnosis.

Mechanical components fault diagnosis.

It is important that fault finding is carried out in the sequence given, otherwise, as electrical and electronic faults sometimes exhibit symptoms similar to mechanical faults, an incorrect diagnosis may be made which could result in both lengthy and costly repairs.

Often, a mechanical fault has sufficiently well defined symptoms to enable a very rapid diagnosis to be made.

The **basic fault finding procedure** is as follows, noting that any faults found in one system should be rectified before moving on to the next stage of the procedure.

1. Carry out a compression test on the engine cylinders. Inhibit the operation of the fuel injection system during this test by removing the fuel injection fuse. Also, isolate the ignition system by disconnecting the flywheel sensor.

Note Do not disconnect the HT king lead for this purpose.

2. Check the integrity of all hose and electrical connections, tighten where necessary.
3. Check the condition of the sparking plugs.
4. Ensure that the vacuum system hoses and pressure pipes are free from leaks.
5. Ensure that any auxiliary air hoses and the crankcase breather system hoses are free from leaks.
6. Carry out the basic system checks to ensure the correct functioning of the ignition and fuel system maps.

During manufacture, the components of the fuel

injection system are precisely adjusted in order to comply with the relevant emission control regulations. Therefore, alterations to any of the settings should not normally be necessary.

Before commencing any fault diagnosis or work on the fuel injection system ensure that the workshop safety precautions are fully understood.

Fuel and ignition system functional checks
The following series of fuel injection and digital ignition system functional checks are necessary to ensure the correct definition of the ignition and fuel system 'maps'.

Note These checks must be carried out with the engine stabilized at its normal operating temperature.

1. With the engine switched off, disconnect the three-way electrical plug to the throttle position switch (see fig. B3-22).
2. Using the multimeter, measure the resistance across the black and blue/purple cables from the switch as follows.

With the throttles closed the reading should be 0 to 0.5 ohms. With the throttles fully open, the reading should be 'infinity'.

3. Now measure the resistance across the black and yellow/purple cables as follows.

With the throttles closed the reading should be 'infinity'. With the throttles fully open the reading should be 0 to 0.5 ohms.

4. Leave the three-way electrical plug to the throttle position switch disconnected. Connect a digital multimeter in 'series' with the electro-hydraulic actuator using the adapter RH 9893 (see fig. B3-23). Set the meter to read milliamps.

'Idle' fuel injection and ignition map check

1. Using a length of cable with suitable connections, bridge the black and blue/purple cables on the electronic control unit (ECU) side of the throttle position switch connection.
2. Start the engine and with the air conditioning system switched off, set the idle speed to 580 rev/min using the idle by-pass screw. Turn the screw clockwise to reduce the engine speed and anti-clockwise to increase engine speed.
3. Check that the ignition timing is 7° ± 1° btdc using a stroboscope directed on the timing marks on the crankshaft pulley.

Check that the multimeter indicates 6mA ± 0.5mA.

'Part load' fuel and ignition map check

1. Stop the engine and remove the bridging cable from the throttle position switch. Disconnect the vacuum hose from the ignition system ECU to the induction manifold (see fig.B3-24) and blank off the manifold tapping.
2. Start the engine and, using the Mityvac pump RH 12495, apply a minimum of 508 mm Hg (20 in Hg) to the ignition ECU hose. This should result in a drop in engine speed of approximately 100 rev/min.

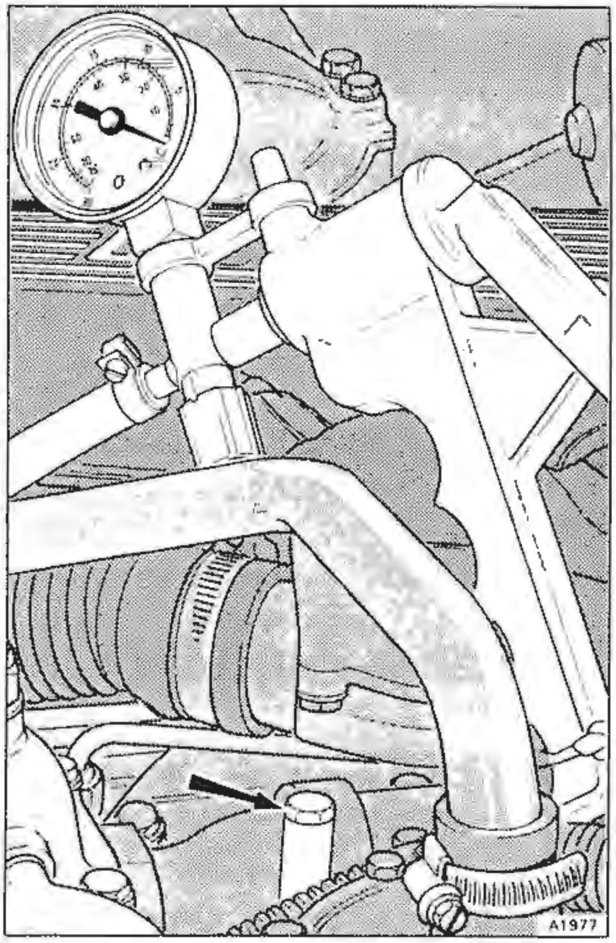

Fig. B3-24 Ignition system manifold vacuum tapping (shown blanked off with 'Mityvac' connected to signal hose)

Note If no decrease occurs, check the vacuum hose for leaks. Also check for an earth fault on the blue/purple or yellow/purple cables.

If no fault is found and the 'Full load' check is satisfactory the ignition system ECU is faulty and requires replacing.

Apply 304,8 mm Hg (12 in Hg) of vacuum to the ignition ECU and set the engine speed to 1500 rev/min ± 50.

Check that the ignition timing is 30° ± 3° btdc and that the multimeter reads 6 mA ± 0.5mA.

3. Remove the vacuum pump and re-connect the vacuum hose to the manifold.

'Full load' fuel and ignition map check

1. Bridge the black and yellow/purple connections on the ECU side of the throttle position switch connection.
2. Start the engine and set the speed to 2000 rev/min ± 50.

Check that the ignition timing is 20° ± 1° btdc and that the multimeter reading is 17mA ± 0.5mA.

3. Set the engine speed to 3000 rev/min ± 50.

Check that the ignition timing is 21° ± 1° btdc and that the multimeter reading is approximately 8.5mA ± 2mA.

It should be noted that the mA reading will fluctuate unless the engine speed is extremely stable.

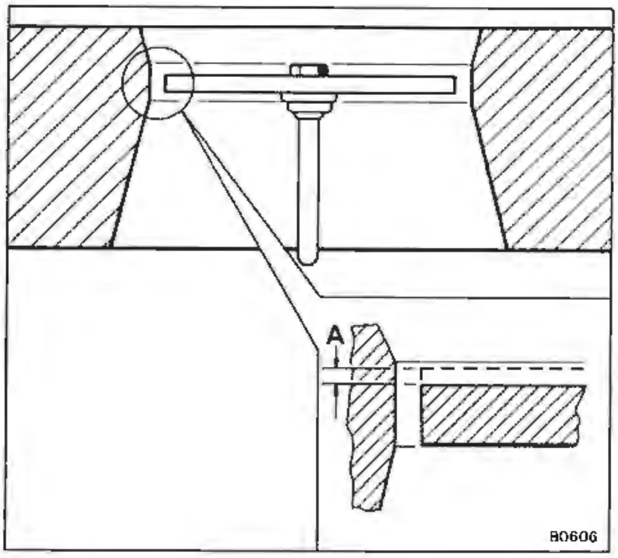

Fig. B3-25 Air sensor plate position

A 1,0 mm (0.040 in) free play with fuel system fully pressurized

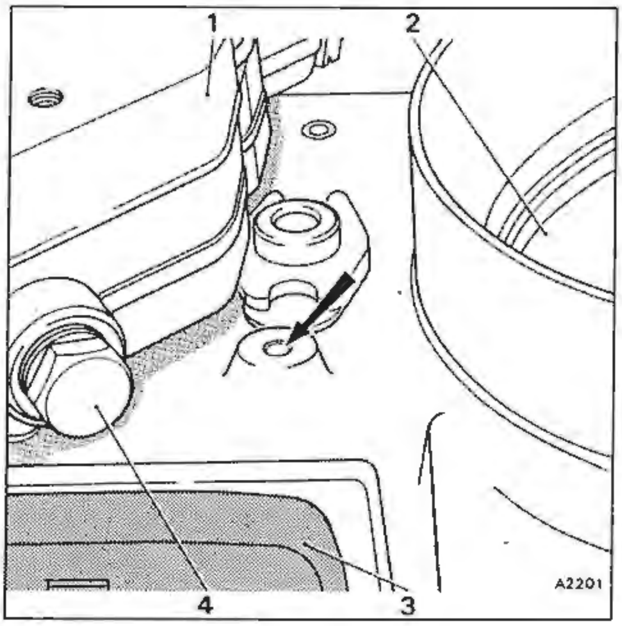

Fig. B3-26 Height adjustment for the air flow sensor plate

1 Fuel distributor
2 Air flow sensor plate
3 Electro-hydraulic actuator (EHA)
4 Differential fuel pressure tapping

If the ignition timing or the fuel injection system mA reading is incorrect, refer to the fault diagnosis flow chart on pages B3-13 and B3-15.

Diagnosing and correcting faults

The workshop procedure number given before the title of the operation refers to the fault diagnosis chart for the basic KE2-Jetronic system given in figure B3-21.

Before carrying out any tests, ensure that the battery is in a fully charged condition.

It should be noted that all components of the system (except the injectors) can be tested on the vehicle.

Procedure 1 Fuel pump and/or pre-pump not operating correctly

For information relating to these components refer to Chapter C.

Procedure 2 Induction system air leaks

Visually check all vacuum hoses, pipes, and clips for damage or looseness that may allow an air leak into the induction system.

Check the entire induction system for air leaks with the engine running. Use a suitable length of rubber hose as a listening aid. The leak will often be heard as a high pitched hiss or whistle.

Procedure 3 Metering control unit lever sticking

1. Ensure that the engine temperature is above 20°C (68°F).
2. Remove the air intake elbow from the inlet to the control unit.
3. Apply pressure to the control piston in the fuel distributor for approximately 10 seconds (refer to page B3-27). Switch off the power to the fuel pumps.
4. Press the air sensor plate slowly downwards to its maximum open position. The resistance to this movement should be uniform over the whole range of travel. Allow the air sensor plate to return to its rest position and repeat the operation.

If the resistance to the air sensor plate movement is uniform over the whole range of travel, the metering unit is not sticking.

Note Whenever the airflow sensor plate is depressed fuel will be sprayed into the engine. Therefore, the sensor plate should only be depressed the minimum number of times to carry out this operation.

5. Should the resistance to air sensor plate movement be greater in the rest position, it could be due to the plate being either out of position or bent.
6. If the condition described in Operation 5 is confirmed, depressurize the fuel system (refer to page B3-12). Then, press the plate fully downwards and allow it to return to the rest position. It should return smoothly to the rest position.
7. Should a resistance be confirmed in Operation 6, remove the air sensor plate and repeat the operation. If this alleviates the resistance, the air sensor plate is fouling the sides of the air funnel and should be

centralized (refer to Procedure 4) or the air funnel may be deformed in some way.

8. If there is still a resistance to the movement of the lever, it could be due to contamination within the fuel distributor barrel or occasional binding in the lever mechanism.

9. Contamination within the fuel distributor can be checked by separating the fuel distributor from the control unit for visual inspection.

Do not attempt to remove the control piston.

Remove the retaining screws situated on top of the fuel distributor. Lift off the fuel distributor (resistance will be felt due to the rubber sealing ring).

10. Examine the distributor for contamination.

11. Fit the fuel distributor by reversing the dismantling procedure. Ensure that the rubber sealing ring is in good condition and is lubricated with a suitable grease.

Ensure that the retaining screws are evenly tightened.

12. If a resistance is still noticeable, a new assembly should be fitted.

13. After fitting the fuel distributor check the idle mixture strength.

Procedure 4 Positioning the air flow sensor plate

1. Remove the air inlet ducting from above the air sensor plate.
2. Check that the sensor plate is flat and that it will pass through the narrowest part of the air funnel without fouling.
3. If necessary, loosen the plate securing bolt.
4. Insert the guide ring RH 9609 whilst retaining the sensor plate in the zero movement position. This will prevent the sensor plate from being forced downwards as the centring guide ring is being installed.
5. With the centring guide ring in position, tighten the retaining bolt to 5 Nm (0,50kgf m to 0,55kgf m, 44lbf in to 48lbf in). Carefully remove the centring guide ring.
6. Apply pressure to the control piston in the fuel distributor for approximately 10 seconds (refer to page B3-27)
7. The air sensor plate should be positioned as shown in figure B3-25, with the plate not protruding above or below the parallel section of the air cone.
8. If the air sensor plate is too high, carefully tap the guide pin lower (see fig.B3-26) using a mandrel and a small hammer.

Note This adjustment must be made very carefully, ensuring that the pin is not driven too low. Repeated adjustment can loosen the guide pin. Serious damage to the engine could result if the pin should fall out.

Procedure 5 Checking the operation of the auxiliary air valve

1. Ensure that the engine is cold.
2. Disconnect the electrical plug at the auxiliary air valve.
3. Disconnect the inlet and outlet rubber hoses from the auxiliary air valve.
4. Using a flashlight and mirror, observe the position of the hole in the blocking plate (see fig.B3-28). It should be partially uncovered. If the blocking plate completely closes the air passage, fit a new auxiliary air valve.
5. If the air passage way is open, connect the electrical plug to the auxiliary air valve.
6. Apply electrical power to the heater in the auxiliary air valve (refer to page B3-27).
7. The air passage through the valve should be completely closed within four to five minutes.

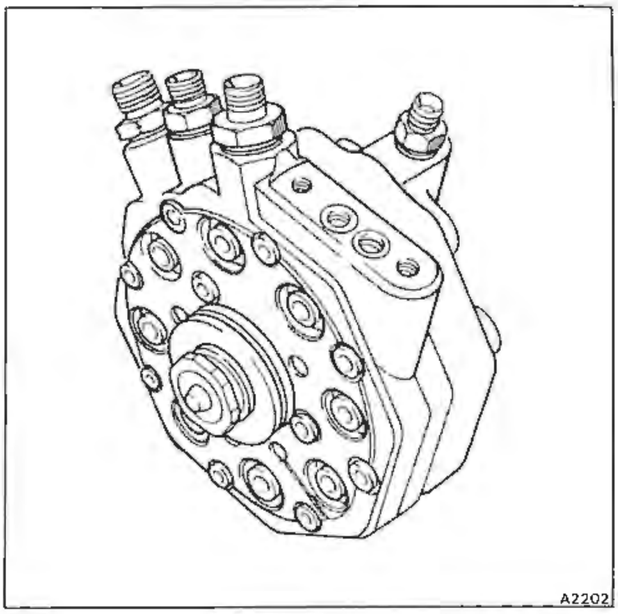

Fig. B3-27 Fuel distributor removed

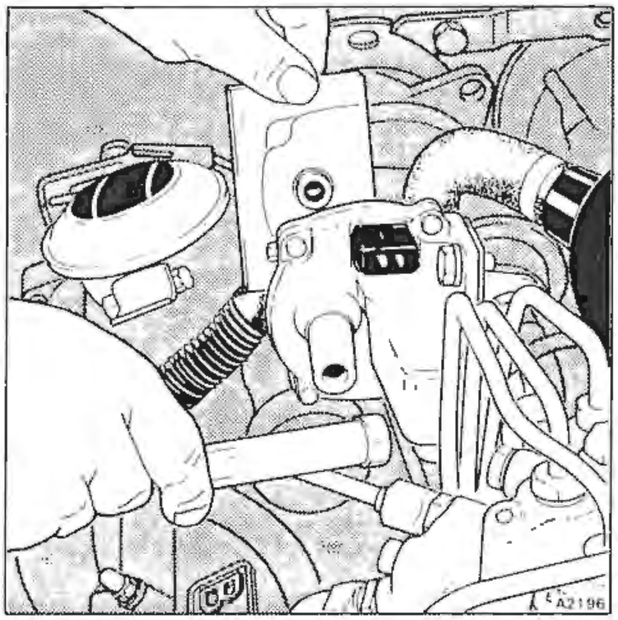

Fig. B3-28 Checking the auxiliary air valve

8. If the blocking plate does not close, check the electrical power supply to the auxiliary air valve. The minimum voltage at the connector should be 11.5 volts.
9. Finally, using an ohmmeter, check the heating coil in the auxiliary air valve for an open circuit. Should the heating coil prove faulty, fit a new air valve.

Procedure 6 Checking the cold start system
When checking the cold start system it is **essential** that the information given in the Workshop safety precautions is observed.

Thermal time switch
1. Withdraw the electrical plug from the thermal time switch.
2. Connect a test lamp between one of the two plug terminals and earth.
3. Switch on the ignition and crank the engine. The bulb of the test lamp should illuminate. Repeat the check on the other plug terminal. If the bulb does not illuminate in either test the electrical connections and wiring of the respective circuit are suspect.
4. Produce a test lead using a Bosch electrical plug and two lengths of cable each approximately 500 mm (19.6 in) long.
5. Connect the test cables to the thermal time switch via the plug.
6. Refer to figure B3-29 and measure the resistance between
a. Terminals W and G.
b. Each terminal and the brass body of the switch.
Depending upon the temperature of the switch, the resistance measured should be within the values given in figure B3-29.

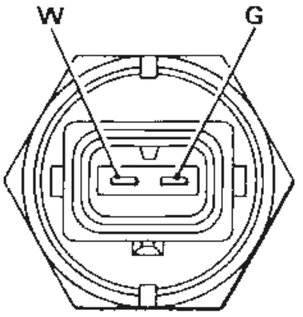

	Resistance - Ohms (meter reading)		
Switch temperature	Between terminal G and earth	Between terminal W and earth	Between terminals G and W
Less than 35°C (95°F)	38	0	38
More than 35°C (95°F)	70	140	70

A1778

Fig. B3-29 Thermal time switch

7. If the values do not correspond with those given in figure B3-29 fit a new switch.
8. After the test has been satisfactorily carried out, remove the test lead assembly and connect the electrical loom plug.

Procedure 7 Checking the cold start injector
1. Detach the electrical plug from the cold start injector.
2. Produce a test lead using a Bosch electrical plug, two lengths of cable and a micro-switch.
3. Remove the cold start injector from the induction manifold with its feed pipe attached. Place the nozzle of the injector into a suitable clean container so that its operation can be observed.
4. Connect the electrical plug to the cold start injector and the two cables, one to an auxiliary electrical feed and the other to an earth point.

Note Exercise care to eliminate the possibility of an electrical spark (use the micro-switch to make and break the circuit).

5. Apply electrical power to operate the fuel pump (refer to page B3-27).
6. Operate the micro-switch to complete the auxiliary electrical circuit. The cold start injector should spray fuel as the contacts in the micro-switch complete the electrical circuit; if it does not spray fuel, fit a new injector.
7. Dry the nozzle of the cold start injector.
8. Repeat Operation 5 but do not operate the micro-switch. Note that no drops of fuel should form on or drip from the injector nozzle. If the injector is defective a new one should be fitted.
9. Remove the auxiliary test lead from the injector and connect the loom plug.

Procedure 8 Checking the operation of the primary fuel circuit
Fuel delivery
1. Depressurize the fuel system (refer to page B3-12).
2. Disconnect the fuel return line at the fuel pressure regulator lower connection. Using a 'firtree' type nipple and nut (SPM 1390/1), connect one end of an auxiliary fuel return hose to the connection. Hold the other end of the hose in a graduated measuring container capable of holding more than 10 litres (2.2 Imp gal).
3. Disconnect the electrical plug from the auxiliary air valve.
4. Apply electrical power to operate the fuel pump (refer to page B3-27). At least 10 litres (2.2 Imp gal) of fuel should be delivered into the measuring container within five minutes.
5. If the delivery quantity is satisfactory, check the primary system pressure. However, if the delivery quantity is below the prescribed amount proceed as follows. Check the fuel pump delivery after each operation.
6. Check the voltage at the fuel pump. When the pump is operating this should be 11.5 volts.
7. Fit a new 'in-tank' filter.

8. Fit a new main fuel filter.
9. Check the fuel lines for blockage.
10. Fit a new fuel pre-pump.
11. Fit a new fuel pump.
12. After establishing that the fuel delivery is correct, remove the test equipment.
13. Connect the fuel return pipe.

Primary system pressure
To carry out this test, fit the pressure tester RH 9612 (Bosch Number KDEP 1034) as shown in figure B3-34.
1. Apply electrical power to operate the fuel pump (refer to page B3-27). The pressure gauge will show primary system pressure which should be between 5,7 bar and 5,9 bar (82.7 lbf/in^2 and 85.6 lbf/in^2).
2. If the primary fuel pressure is too high.
a. Check for a restriction in the return line to the tank.
b. The fuel pressure regulator is faulty.
3. If the primary fuel pressure is too low.
a. Check the fuel supply.
b. The fuel pressure regulator is faulty.

Procedure 9 Checking the differential fuel (lower chamber) pressure
The engine must be at normal operating temperature for this test to ensure a stable reading.
1. Measure the primary fuel pressure. Ensure that the reading is within the specification.
2. Remove the pressure tester and re-connect the cold start injector pipe to the fuel distributor.
3. Install the pressure tester (see fig. B3-35).
4. Apply electrical power to operate the fuel pump for 30 seconds (refer to page B3-27). Switch off the power to the fuel pump.

The gauge will now show the differential pressure valve lower chamber pressure which should be 5,3 bar to 5,5 bar (76.9 lbf/in^2 to 80.0 lbf/in^2).
5. If the differential fuel pressure is outside the specified limit.
a. The fuel pressure regulator is faulty.
b. The fuel metering unit is faulty.
c. The electro-hydraulic actuator (EHA) is faulty.
d. The mA supply to the EHA is incorrect.

Note When the engine is fully warmed-up the mA supply at idle to the EHA should be 6 mA (± 0.5 mA).

Procedure 10 Checking the fuel system for leaks
The engine should be at normal operating temperature for this test.
1. Fit the pressure tester RH 9612 (see fig. B3-34).
2. Apply electrical power to operate the fuel pump for 30 seconds (refer to page B3-27).
3. Allow the primary system pressure to build-up. Switch off the power to the fuel pump.
4. Note the time it takes for the pressure to fall to zero and compare this with the graph (see fig. B3-30).
5. If the pressure loss is outside the acceptable limits, the leak may be due to.
a. Defective pressure regulator.
b. Leaking cold start injector.
c. Faulty non-return valve in the fuel pump.

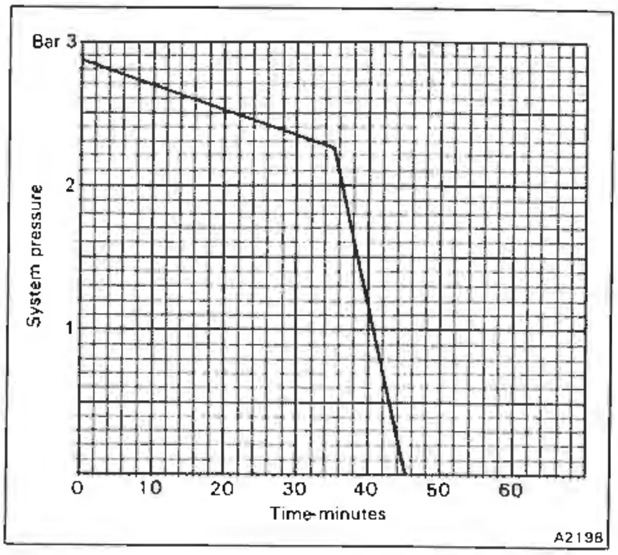

Fig. B3-30 Fuel system 'leak down'

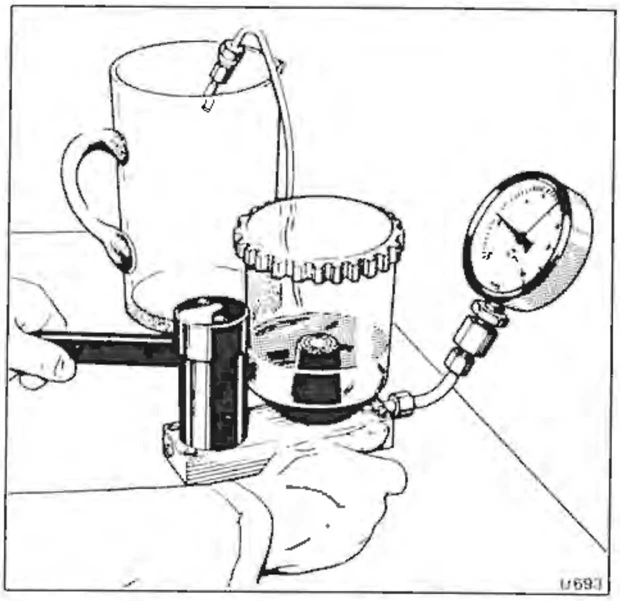

Fig. B3-31 Testing an injector

d. Leaking accumulator diaphragm.
e. An external leak from one of the fuel system pipes.
f. One or more of the injectors leaking.

Procedure 11 Checking the injectors
1. Remove the injectors from the engine.
2. Connect one injector to the test equipment RH 9614 (Bosch Number KDJE 7452). Refer to figure B3-31.

Opening pressure
3. Bleed the discharge tube by moving the operating lever several times with the union slackened. Tighten the union.

4. Check the injector for dirt by operating the lever slowly at approximately one stroke per two seconds, with the valve on the pressure gauge open.

If the pressure does not rise to between 1,0 bar and 1,5 bar (14.5 lbf/in^2 and 21.8 lbf/in^2) the valve of the injector has a bad leak, possibly caused by dirt. Attempt to flush the valve by operating the lever rapidly several times. If the injector valve does not clear the injector should be discarded.

5. Check the opening pressure of the injector by closing the valve of the test equipment and bleeding the injector by operating the test equipment lever rapidly several times. Open the valve and move the lever slowly at approximately one stroke per two seconds, note the pressure at which the injector begins to spray.

The correct pressure for the injector to commence spraying is between 3,5 bar and 4,1 bar (50.8 lbf/in^2 and 59.5 lbf/in^2). If this is not correct fit a new injector.

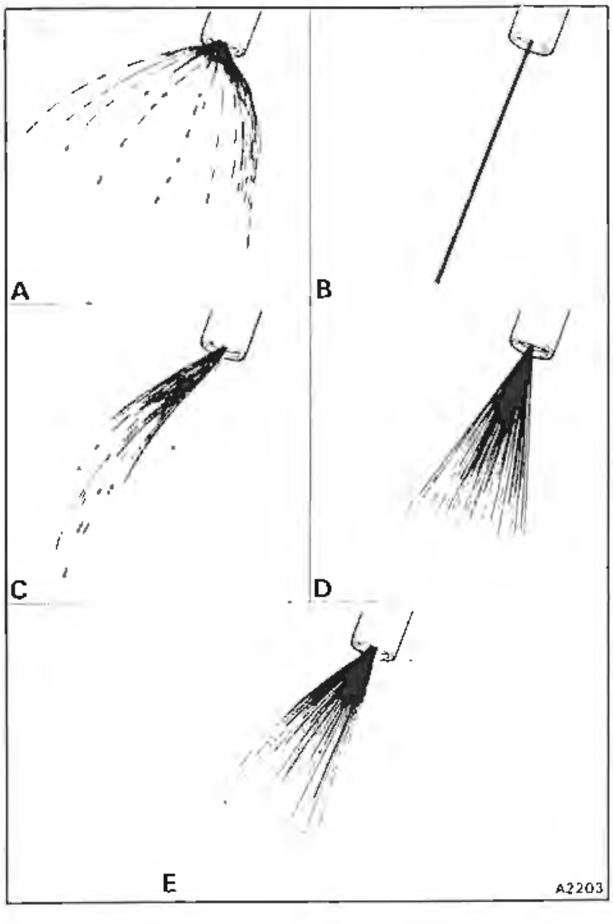

Fig. B3-32 Injector spray patterns
Unacceptable spray patterns
A Drop formation
B Cord spray
C Spray in strands
Acceptable spray patterns
D Good spray formation
E Single-sided but still a good spray formation

Leakage test

6. Open the valve on the test equipment and slowly operate the lever until the pressure reading is 0,5 bar (7.3 lbf/in^2) below the previously determined opening pressure.

7. Hold this pressure constant by moving the lever.

8. No drops should appear from the injector for the next 15 seconds.

Evaluation of spray and 'chatter' test

9. Operate the lever of the test equipment at one stroke per second. As this is done, the valve in the end of the injector should be heard to 'chatter'.

10. The injector should produce an even spray with an approximate spray angle of 35°. If drops form at the mouth of the injector valve or if the spray is excessively one-sided, the injector should be discarded.

The various spray formations and angles are shown in figure B3-32.

Repeat Operations 1 to 10 inclusive on the remaining injectors noting that only new test fluid must be used to replenish the reservoir of the test equipment.

Procedure 12 Checking the delivery balance of the fuel distributor

1. Fit the delivery quantity comparison tester RH 9613 (Bosch Number KDJE 7455).

2. Remove the air intake elbow to reveal the air sensor plate.

3. Apply electrical power to operate the fuel pump and build-up pressure in the system (refer to page B3-27).

4. Bleed the test equipment.

5. This test is carried out under simulated idle, part load, and full load conditions as follows.

Note The test equipment rotameter scale may read either ml/min or cm^3/min. Whichever scale is used, the flow figures are identical (i.e. 1 ml/min=1 cm^3/min).

Idle conditions

6. Press switch number one on the test equipment and move the air flow sensor plate downwards (using the adjusting device shown in figure B3-33) until the reading on the small rotameter indicates a flow of approximately 6,7 ml/min.

7. Test the remaining outlets and determine which one has the lowest fuel delivery.

8. Press the switch of the outlet with the lowest fuel delivery and using the adjusting device, adjust the height of the air flow sensor plate until the reading on the rotameter is 6,7 ml/min.

9. Measure the fuel delivery from each outlet, noting that none of them should exceed 7,7 ml/min.

Part load conditions

10. Repeat Operations 6 to 9 inclusive, moving the air flow sensor plate downwards, until a fuel delivery of 20,8 ml/min is measured (on the large rotameter) from the fuel outlet with the lowest delivery.

11. Measure the fuel delivery from each outlet, noting that it should not exceed 22,4 ml/min.

Full load conditions

12. Repeat Operations 6 to 9 inclusive, moving the air flow sensor plate further downwards, until a fuel delivery of 94 ml/min is measured from the fuel outlet with the lowest delivery.

13. Measure the fuel delivery from each outlet, noting that it should not exceed 99 ml/min.

If the fuel delivery exceeds the limits quoted, a new distributor should be fitted.

Procedure 13 Checking the engine idle speed

Refer to Idle speed – To set in the service adjustments section.

Procedure 14 Checking the operation of the throttle plates

1. Depress the accelerator pedal fully and observe the position of the throttle levers.
2. Ensure that the throttle levers are fully open (i.e. against the stops).
3. Also, ensure that the throttle linkage operates smoothly through both primary and secondary stages.
4. If the throttles do not open fully, or if the linkage does not operate smoothly, the problem should be investigated and corrected as described in Chapter K.

Procedure 15 Checking the fuel accumulator diaphragm for a leak

1. Locate the flexible hose connecting the accumulator to the fuel tank return pipe.
2. Suitably clamp the hose to prevent unpressurized fuel from flowing out during the test.
3. Unscrew the worm drive clip securing the flexible hose to the connection on the fuel accumulator.
4. Withdraw the hose from the connection.
5. Apply electrical power to operate the fuel pump (refer to page B3-27) and pressurize the fuel accumulator.
6. Ensure that no fuel flows from the open connection on the fuel accumulator during the test.
7. If fuel does flow from the open connection, the accumulator diaphragm is leaking and a new fuel accumulator must be fitted.
8. Connect the fuel pipe and remove the clamp.

Procedure 16 Checking the engine running sensor

1. Switch on the ignition, the fuel pumps should not operate.
2. Switch off the ignition.
3. Disconnect the battery.
4. Disconnect the engine running sensor electrical plug and socket situated approximately 75 mm (3 in) along the loom from the sensor.
5. Produce a fused test lead with an appropriate 'TTS' type connection on each end. Bridge the white/pink and pink on the vehicle loom socket (ensure that the connections are insulated).
6. Connect the battery, noting that the fuel pump operates.

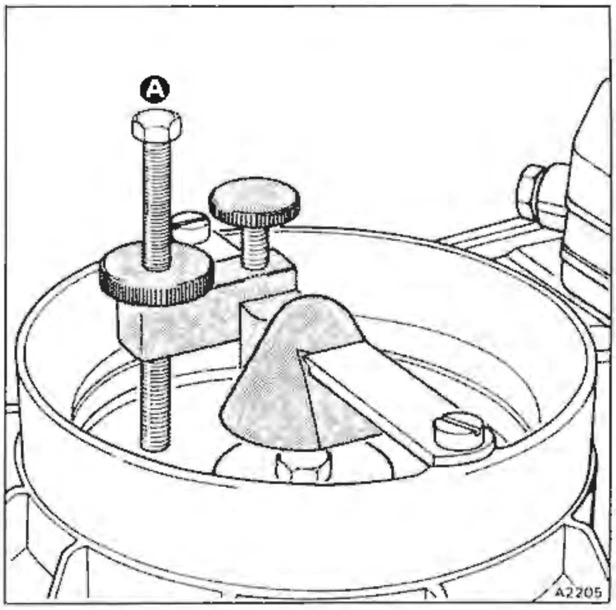

Fig. B3-33 Air flow sensor plate movement adjustment device
A Adjusting screw (part of accessory kit RH 9960)

This test isolates the engine running sensor from the fuel pump circuit.

If the fuel pump still does not operate, check for a fault in one of the following.

a. The pink cable to the vehicle loom socket via fuse B5 F2.
b. The white/pink cable to the main fuel pump.
c. The fuel pump.

7. Disconect the battery, remove the bridging cable and reconnect the engine running sensor. Connect the battery.

Apply electrical power to operate the fuel pump (refer to page B3-27).

If the fuel pumps do not operate, check for a fault in the following.

a. The brown/black cable from the starter relay to the loom socket.
b. Check for continuity of the white/black cable.

Normally, a symptom of a fault in this supply is that the engine will start when cranked by the starter motor but stops immediately the key is released.

If the fault diagnosis indicates that the loom and ancillary components are satisfactory, fit a new engine running sensor.

Procedure 17 Checking the operation of the idle speed by-pass solenoid

1. Ensure that the parking brake is applied. Warm-up the engine.
2. Allow the engine to idle at 580 rev/min in park with the air conditioning system switched on.
3. Apply the foot brake and engage drive. Check that the idle speed is between 560 rev/min and 620 rev/min.

If the idle speed falls below 560 rev/min check the following.

a. Test for electrical feed to the solenoid when in drive.

b. Check for a blocked hose.

If the above are found to be satisfactory, the solenoid valve is faulty and should be replaced.

Note This solenoid does not operate with the gear range selector lever in the reverse position.

Procedure 18 Checking the air intake filter and ducting for blockage

1. Remove the air filter element.
2. Examine the condition of the element and fit a new one if necessary.
3. Inspect the filter housing assembly. Particular attention should be given to the intake 'scoop' that diverts air from behind the front bumper into the filter housing; ensure that this is not obstructed.
4. Slacken the worm drive clips and free the flexible ducting from either side of the turbocharger.

   Ensure that the air intake elbow and ducting are not blocked.
5. Spin the turbocharger to ensure that the blades of the assembly rotate freely.
6. Carry out the tests given in the Workshop procedures 4 and 14.
7. Fit all hoses, clips, and the filter element upon satisfactory completion of the tests.

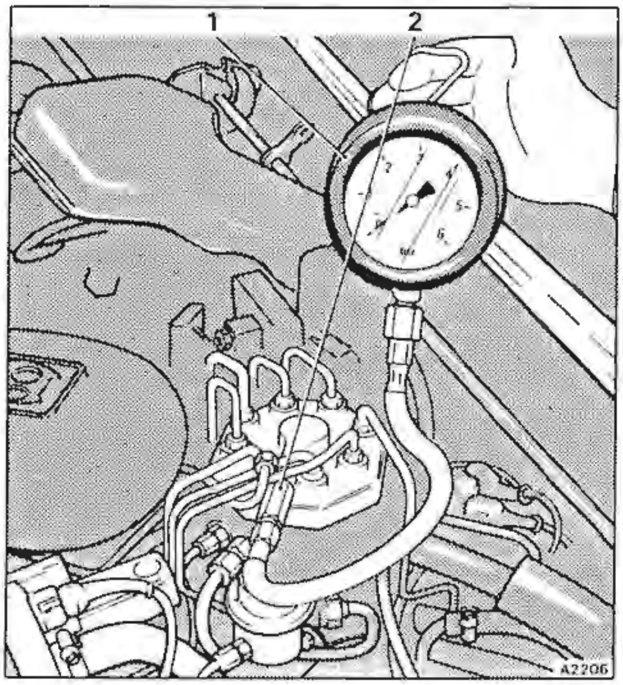

Fig. B3-34 **Pressure tester equipment – testing for leaks or primary system pressure**

1 Pressure gauge assembly RH 9612 or RH 9873

2 Special adapter RH 9881

Fault diagnosis test equipment and special procedures

This section contains information relating to the fitting procedures for the test equipment used when diagnosing a fault. Also included are the special procedures associated with the fuel injection system.

Depressurizing the fuel system

The fuel in the system may be pressurized (except for the fuel tank and return lines). Therefore, unless the engine has been stationary for a minimum of four hours, it is recommended that the fuel system be depressurized before dismantling any parts of the system.

The depressurizing procedure is given on page B3-12.

Fuel injection system – pressure tester

The pressure tester equipment (see figs. B3-34 and B3-35) should be connected into the cold start injector feed line, on top of the fuel distributor or the lower differential pressure valve tapping point.

With the gauge connected at these points, the fuel system can be checked for.

a. Fuel system leakage either internal or external (see fig. B3-34).

b. Primary system fuel pressure (see fig. B3-34).

c. Differential fuel pressure (see fig. B3-35).

Installation of the test equipment

1. Carry out the usual workshop safety precautions.
2. Switch on the ignition. Ensure that the gear range selector is in the park position. Switch off the ignition and withdraw the gear range selector fuse (A6) from fuseboard F2.
3. Disconnect the battery.
4. Depressurize the fuel system.
5. The pressure gauge may now be connected to the fuel distributor as shown in either figure B3-34 or B3-35. Ensure that all pipe nuts and unions are tight.

Bleeding the test equipment

After fitting, but prior to using the test equipment, always ensure that it is properly bled as follows.

6. Remove the electrical connection from the auxiliary air valve.
7. Apply electrical power to operate the fuel pump (refer to page B3-27).
8. Allow the gauge to hang down under its own weight with the flexible hose fully extended, for a few seconds.
9. Lift up the gauge and suspend it from a suitable point.
10. The pressure tester equipment is now ready for use.

Fuel delivery quantity comparison tester

If there is any discrepancy in the quantity of fuel delivered by the individual fuel distributor outlets, it can be measured by a comparison test, using the test equipment RH 9613 (Bosch Number KDJE 7455), refer to figure B3-37.

The test equipment is designed in such a way that the tests can be carried out without removing the fuel distributor from the engine.

Ideally, the tester should be set permanently on a mobile trolley, so that once it is levelled-up, only the trolley needs to be manoeuvred to the test site. However, the tester can be set up on a table close to the test vehicle and the test equipment is levelled-up for each test using the levelling screws and spirit level.

The test equipment should be fitted to the vehicle as follows.

1. Disconnect the battery.
2. Unscrew the unions securing the fuel injector lines to the fuel distributor outlets.
3. Screw the special adapters supplied with accessory kit RH 9960 into the fuel distributor outlets.
4. Fit the automatic couplings fastened on the ends of the test equipment to the special adapters in the fuel distributor outlets.

Note Outlet one from the fuel distributor should always be nearest to the fuel inlet connection. Figure B3-36 indicates which test line and switch of the test equipment are connected to which engine cylinder.

5. Route the fuel return pipe across the engine, along the side of the car and into the filler for the fuel tank.
6. Disconnect the electrical plug from the auxiliary air valve.
7. Connect the battery.

Note The condition of the battery is critical for this test. Therefore, always check the state of charge of the battery.

8. Apply electrical power to operate the fuel pump (refer to page B3-27).
9. To bleed the test equipment, remove the air intake ducting from the mixture control unit and push the air flow sensor plate downwards to its fully opened position. Press each key on the flowmeter one after the other, whilst simultaneously operating the three-way tap. Continue this operation until there are no bubbles in the two rotameters.
10. Allow the air sensor plate to return to the zero position. The test equipment is now ready for use.
11. To remove the test equipment, depressurize the system and reverse the procedure.

Apply control pressure to the system

1. Withdraw the starter inhibit relay (see fig. B3-38).
2. Produce a bridge cable of suitable length.
3. Bridge the green cable in the windscreen washer reservoir motor and the white/pink cable connection on the starter inhibit relay mounting block.
4. Switch on the ignition.
5. The fuel pump will run and pressure will build-up in the system.
6. Always remove the bridging cable immediately the test is complete.

Apply electrical power to operate the fuel pump and build-up pressure in the system

1. Carry out the operations listed under the heading, Apply control pressure to the system.

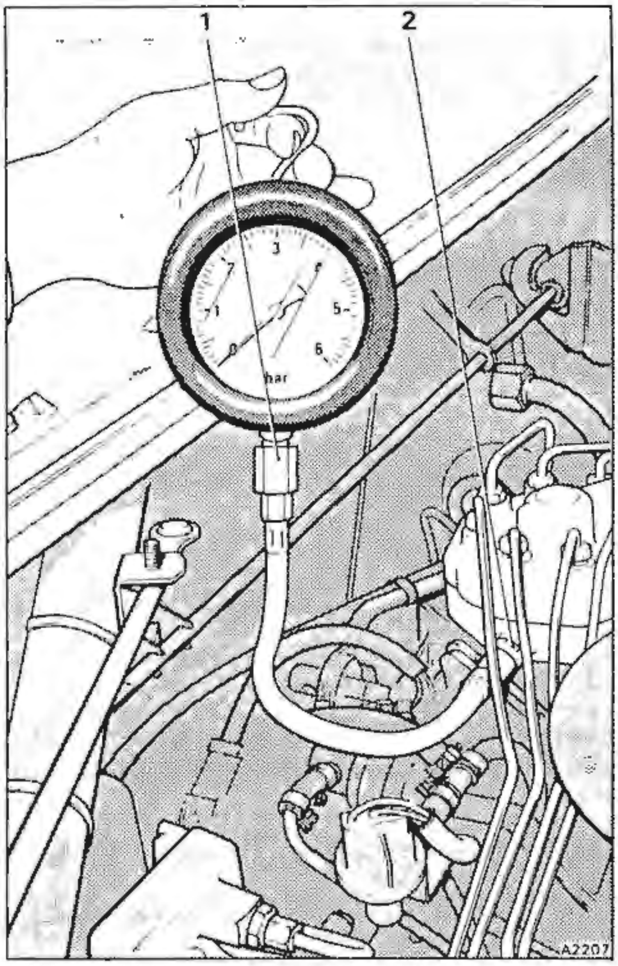

Fig. B3-35 Pressure tester equipment – testing differential (lower chamber) pressure

1 Pressure gauge assembly RH 9612 or RH 9873

2 Special adapter RH 9881

Apply electrical power to the heater in the auxiliary air valve

1. Carry out the operations listed under the heading, Apply control pressure to the system.

Removal and fitting of components

Before dismantling any connections and removing any components always depressurize the system. Always blank off any open connections to prevent the ingress of dirt.

Mixture control unit (see figs. B3-39 and B3-40)
The mixture control unit comprises the air meter and the fuel distributor.

The fuel distributor can be removed separately from the mixture control unit, however, in the process of general dismantling the components would be removed as one assembly.

Fuel distributor – To remove and fit

1. Disconnect the battery and depressurize the fuel system (refer to page B3-12).
2. Unscrew and remove the following connections on the fuel distributor.
a. Fuel supply to the fuel distributor.
b. Fuel supply to the cold start injector.
c. Small diameter pipe between the fuel distributor and the pressure regulator.
3. Unscrew the unions from both ends of the eight injector pipes and carefully withdraw the pipes.
4. Using a screwdriver, unscrew the securing screws situated on top of the distributor.
5. Lift the fuel distributor from the mixture control unit and collect the rubber sealing ring (resistance will be encountered due to the rubber sealing ring).
6. Do not remove the control piston from the fuel distributor.
7. Fit the fuel distributor by reversing the removal procedure, noting that the rubber sealing ring fitted in between the fuel distributor and mixture control unit must be in good condition. If in doubt, fit a new sealing ring. When installing the sealing ring ensure that it is lubricated with a suitable grease and that it does not become trapped when the fuel distributor is fitted. This could cause a subsequent air leak which may be difficult to detect. Check the idle mixture strength.

Mixture control unit assembly – To remove and fit
(see figs. B3-39 and B3-40)

1. Disconnect the battery and depressurize the fuel system (refer to page B3-12).
2. Unscrew the worm drive clips securing the air intake hose to the cast elbow. Free the joint.
3. Unscrew the worm drive clips securing the dump valve flexible hose to the return pipe. Free the joint.
4. Free the small diameter pipes to the dump valve.
5. Unscrew the two nuts retaining the long reach studs to the mixture control unit.
6. Withdraw the intake elbow.
7. Disconnect the electrical plug to the auxiliary air valve.
8. Unscrew the worm drive clips and free the two hoses to the auxiliary air valve and the smaller diameter hose to the rear of the idle speed control solenoid.
9. Unscrew the injector pipe nuts from on top of the fuel distributor. Free the pipes.
10. Unscrew and remove the following connections on the fuel distributor.
a. Fuel supply to fuel distributor.
b. Fuel supply to cold start injector.
c. Small diameter pipe between the fuel distributor and the pressure regulator.
11. Unscrew the pipe nut securing the fuel return pipe to the bottom of the pressure regulator.
12. Unscrew the setscrew clamping the fuel pipes to the bracket at the rear of the mixture control unit.
13. Unscrew the two mounting setscrews, one at the front and one at the rear of the unit.
14. Detach the electrical cables to.
a. The electro-hydraulic actuator.
b. The air flow sensor potentiometer.
c. The dump valve solenoid valve.
d. The dump valve vacuum switch.
15. Free the small diameter signal hoses to the solenoid and vacuum switch.
16. Unscrew the rear mounting nut (situated under the dump valve solenoid) and the front mounting setscrew (situated under the dump valve).
17. Carefully lift the assembly from the engine with the ancillary units still attached.
18. Remove the upper section of the mixture control unit from the lower half (air outlet duct) by unscrewing the cap nuts situated around the face joint.
19. Fit the assembly by reversing the procedure given for removal, noting that the face joint between the two halves of the assembly should be clean and coated with Wellseal.
20. Ensure that any rubber sealing rings that have been disturbed are in good condition.

Note Whenever a hose or an electrical plug is disconnected, it is advisable to attach an identification label to facilitate assembly.
In addition any open connections should be blanked as soon as possible to prevent the ingress of dirt.

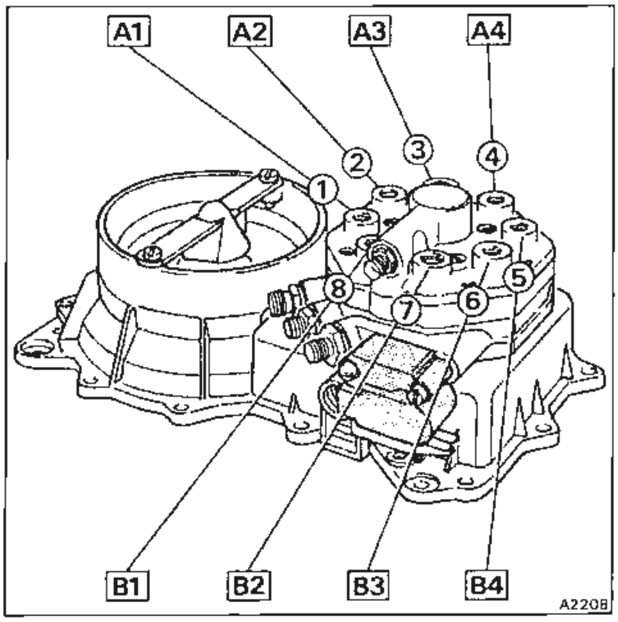

Fig. B3-36 Fuel distributor connections
○ Key number on test equipment (left to right)
☐ Engine cylinder

Throttle body – To service

To remove, fit, and overhaul the throttle body refer to Chapter K.

Auxiliary air valve – To remove and fit
(see figs. B3-1 and B3-12)

1. Disconnect the electrical plug.

2. Unscrew the worm drive clips securing both of the rubber hoses.
3. Unscrew the two mounting setscrews.
4. Withdraw the auxiliary air valve.
5. Fit the auxiliary air valve by reversing the removal procedure.

Cold start injector – To remove and fit
(see figs. B3-7 and B3-39)

1. Disconnect the battery and depressurize the fuel system (refer to page B3-12).
2. Detach the electrical plug from the cold start injector.
3. Unscrew the union connecting the fuel feed pipe to the injector.
4. Unscrew the two small setscrews retaining the injector in position. Collect the washer from each setscrew.
5. Withdraw the injector and collect the rubber sealing ring.
6. To fit the cold start injector reverse the procedure given for removal.

Thermal time switch – To remove and fit
(see fig. B3-13)

1. Disconnect the battery and remove the electrical plug from the thermal time switch.
2. Drain the engine coolant (refer to Workshop Manual TSD 4700, Chapter L).
3. Locate the brass thermal time switch (the forward switch on the inside of the thermostat housing).
4. Detach the electrical plug and carefully unscrew the switch.
5. Fit the switch by reversing the procedure, noting the following.

Always fit a new aluminium sealing washer.

Always coat the threads of the switch with a suitable sealant (e.g. Loctite 572).

Do not overtighten the switch.

Injector – To remove and fit (see figs. B3-6 and B3-39)
There are eight injectors fitted to the engine one for each cylinder. The removal and fitting procedure given below is for one injector but the instructions apply equally to all of the injectors.

1. Disconnect the battery and depressurize the fuel system (refer to page B3-12).
2. Free the loom rail from the respective side of the engine. Manoeuvre the rail away to gain access to the injectors.
3. Unscrew the union connecting the fuel line to the injector.
4. Unscrew the two setscrews securing the injector retaining plate to the cylinder head.
5. Remove the plate and withdraw the injector.
6. Fit the injectors by reversing the procedure given for removal, noting that the rubber insulating sleeve must be in good condition.

It is essential to check the spray patterns of the injectors before they are fitted.

New injectors must be thoroughly flushed out before they are tested.

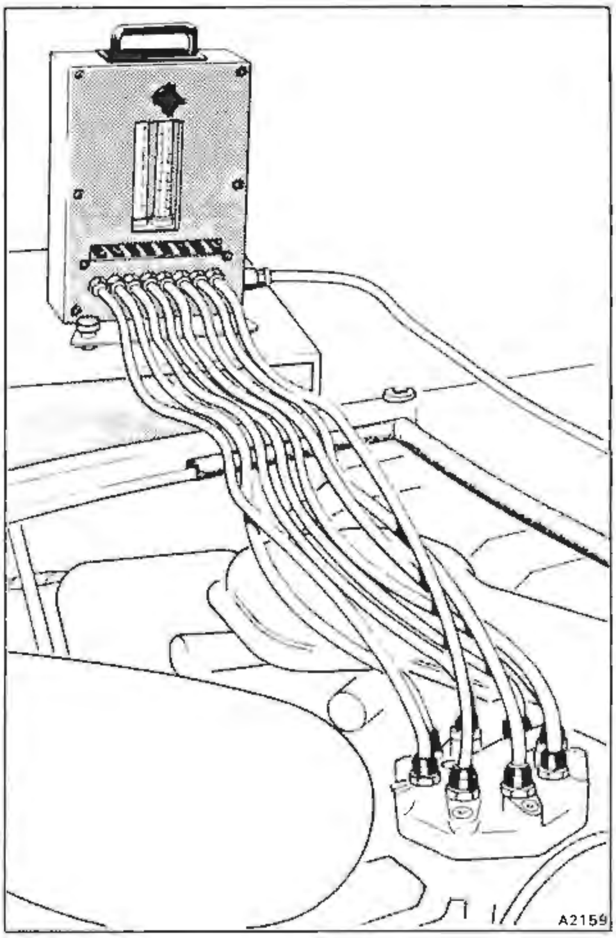

Fig. B3-37 Installation of comparison tester
1 Fuel delivery quantity comparison tester RH 9613 (Bosch No. KDJE 7455)
2 Adapters (part of accessory kit RH 9960)

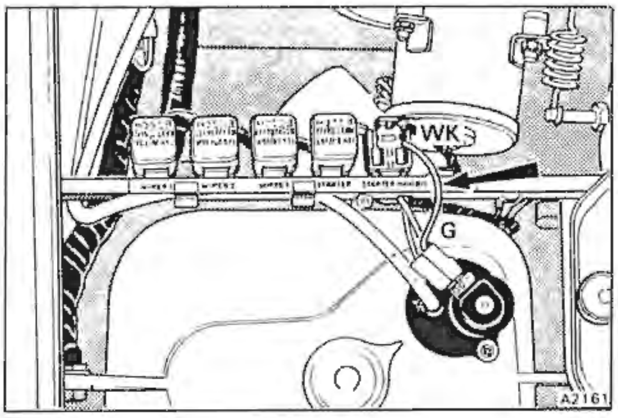

Fig. B3-38 Bridging the starter inhibit relay

Fuel pressure regulator – To remove and fit
(see figs. B3-1 and B3-9)

1. Disconnect the battery.
2. Depressurize the fuel system (refer to page B3-12).

3. Unscrew the pipe nuts of the three connections to the assembly.

4. Unscrew the small setscrew retaining the regulator to its mounting bracket.

5. Withdraw the assembly.

6. Fit the regulator by reversing the removal procedure.

Electro-hydraulic actuator – To remove and fit
(see figs. B3-17 and B3-41)

1. Disconnect the battery.
2. Depressurize the fuel system (refer to page B3-12).
3. Remove the fuel pressure regulator.
4. Unscrew the two **special** (non-magnetic) retaining

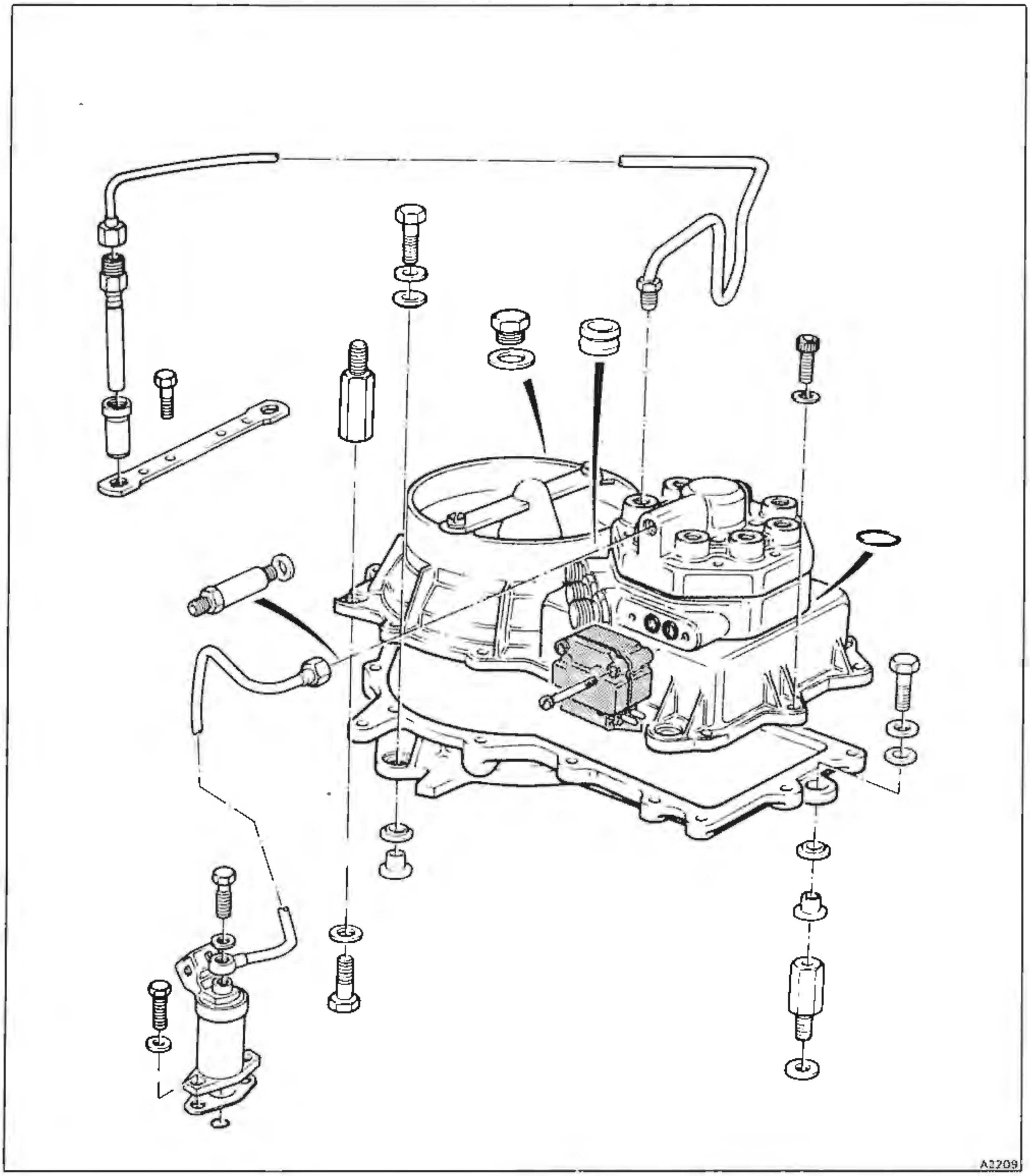

Fig. B3-39 Fuel distributor and associated components screws and withdraw the actuator.

5. Fit the actuator by reversing the removal procedure, noting the following.

Always ensure that the rubber sealing rings are in good condition.

Always use the special non-magnetic screws to secure the actuator in position.

Engine running sensor – To remove and fit

1. Disconnect the battery.
2. Locate the main fuseboard, the engine running sensor is located directly behind the fuseboard on the right-hand side.
3. Follow the cables that emerge from the top of the assembly, to the cable connector situated

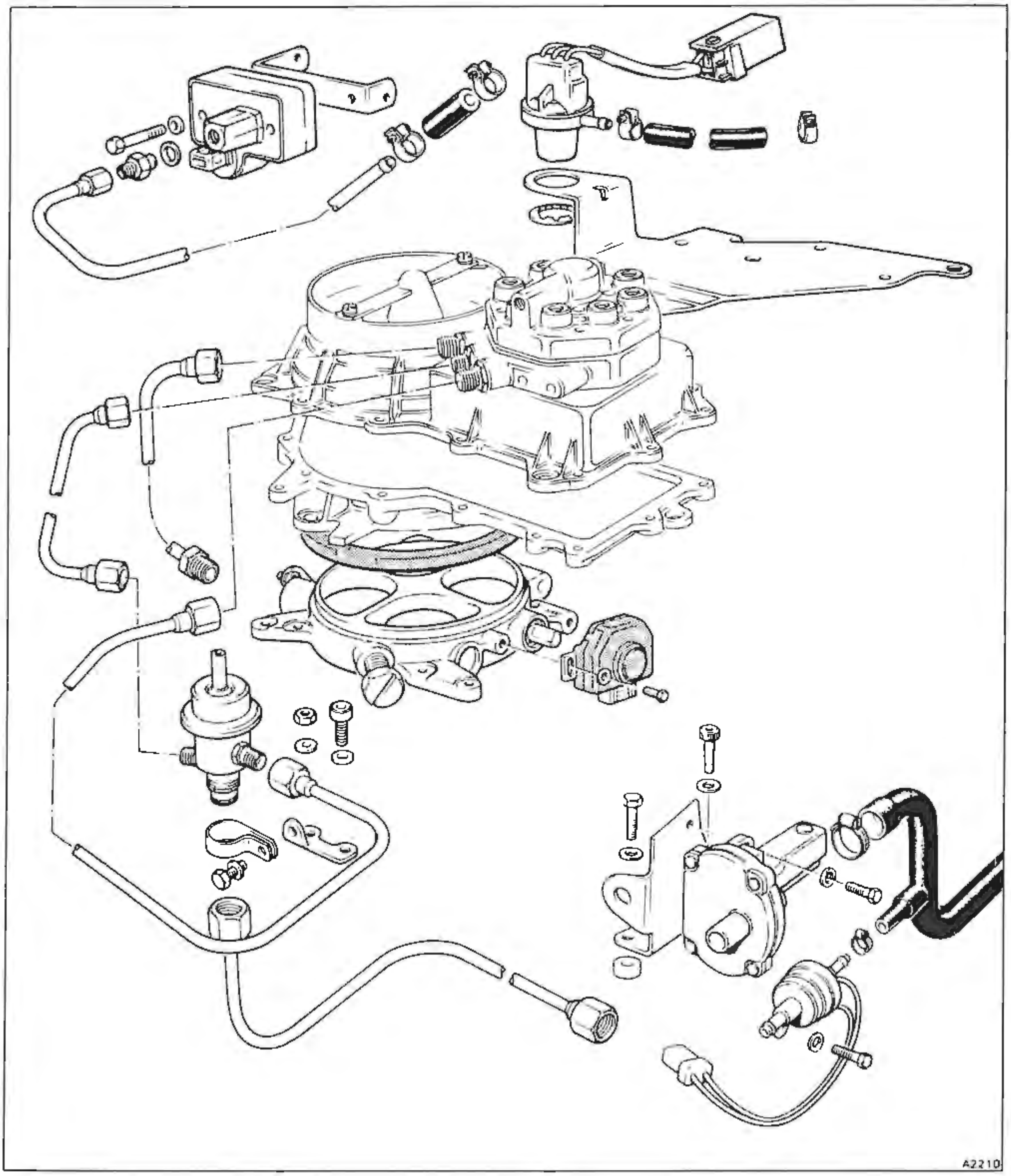

Fig. B3-40 Fuel distributor and associated components approximately 50,8 mm (2 in) from the sensor.

Disconnect the cables at this junction.

4. Withdraw the relays and mounting block situated directly in line with the engine running sensor.
5. Working from behind the assembly, unscrew the two securing nuts.
6. Withdraw the two long mounting setscrews.
7. Carefully manoeuvre the engine running sensor free.
8. Fit the assembly by reversing the procedure.

Electronic control unit – To remove and fit
(see fig. B3-18)

The ECU is mounted on a common bracket with the ignition system ECU, above the right-hand footwell. The fuel injection system ECU is black in colour.

The fuel injection system ECU should be withdrawn together with the ignition system ECU by removing the mounting bracket, as follows.

1. Disconnect the battery.
2. Disconnect the multi-pin plug to each ECU.
3. Remove the two screws at the rear of the mounting plate.
4. Withdraw the bracket rearwards from its front mounting clip.
5. Unscrew the clip securing the signal hose to the forward end of the ignition system ECU.
6. Completely withdraw the mounting bracket together with both the electronic control units still attached.
7. Detach the fuel injection ECU (coloured black) from the mounting bracket by removing the three retaining screws.
8. Fit the assembly by reversing the dismantling procedure.

Service adjustments

Preliminary checks

Before carrying out any tuning, the following basic checks should be made.

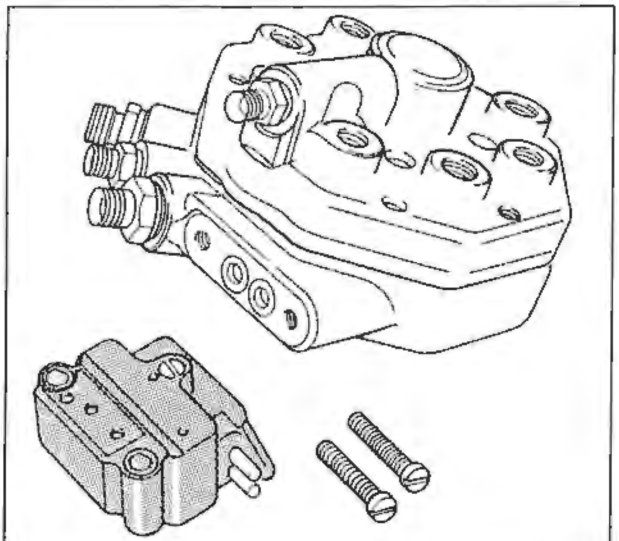

Fig. B3-41 Electro-hydraulic actuator – removed

a. Check the condition of the sparking plugs.
b. Ensure that the throttle linkage is correctly set (refer to Chapter K).
c. Ensure that the throttle position switch is correctly set (refer to Chapter K).
d. Check all air hose connections for tightness.
e. Start the engine and visually check the fuel system for leaks.
f. Whilst the engine is running, check the entire induction system for leaks (refer to this section, Workshop procedure 2).

Before undertaking the tuning procedure the following work should be carried out.

1. Connect an impulse tachometer to the engine in accordance with the manufacturer's instructions.
2. Connect an ignition stroboscopic lamp to the engine in accordance with the manufacturer's instructions.
3. Insert the sample probe of the CO meter as far as possible into either exhaust tailpipe. Ensure that the CO meter is fully warmed-up and correctly adjusted.
4. Ensure that the engine is at normal operating temperature.

Tuning procedure

If the complete tuning procedure is to be carried out the following sequence of operations is recommended.

a. Check the fuel and ignition systems (refer to this chapter).
b. Check the operation of the dump valve (refer to Chapter D).
c. *Check the purge flow rate (refer to Chapter G).
d. Check the mixture strength (refer to this chapter).
e. Check the engine idle speed (refer to this chapter).

Note The asterisk denotes a system only fitted to certain cars.

Idle mixture strength – To set

Note It is important that the idle CO strength is checked with the engine stabilized at normal operating temperature and in an ambient temperature range of 15°C to 30°C.

Also, during any idle CO measurement, the crankcase must be completely sealed which means the oil filler cap **must be closed** and the oil dipstick pushed fully into position.

On cars fitted with a fuel evaporative emission control system, disconnect the purge control line (see Chapter G).

Note It is important that the test equipment used to set the idle mixture strength meets the following specification.

Accuracy – CO meter range 0% to 2%
CO concentration within ± 0·1%
Rotational speed within ± 10 rev/min.

1. Insert the sample probe of the CO meter as far as possible into either exhaust tailpipe. Ensure that the CO meter is fully warmed-up and correctly adjusted.
2. Set the engine speed to 580 rev/min (air conditioning system switched on) using the idle by-

pass screw (see fig. B3-11).

Note To avoid rev/min fluctuations due to the air conditioning compressor cycling in and out; it is permissible to bridge out the system thermostatic switch located in the evaporator by using a length of cable and suitable connectors.

Ensure that the air conditioning function switch is set to high and both temperature selectors are on full cold. Open all windows/ doors. **Only keep the thermostat bridged for a maximum of 10 minutes, then remove the bridge for at least five minutes.**

Do not forget to remove the bridge cable when the CO has been set.

3. Check that the CO concentration is within the range 0.8% to 1.0%.

4. If the CO reading is outside the specified limits, remove the tamperproof plug and blanking screw from the fuel metering unit (see fig. B3-42).

5. Insert the mixture adjusting tool RH 9608 and adjust the mixture strength as follows.

Turn the mixture adjusting tool clockwise to richen the mixture (increase CO%) or anti-clockwise to weaken the mixture (reduce CO%).

Note Always approach the final setting from the lean/weak side.

After making an adjustment, remove the adjusting tool and replace the blanking screw. **Failure to replace this screw will result in an incorrect CO measurement.**

6. If necessary reset the idle speed to 580 rev/min using the idle by-pass screw. Briefly accelerate the engine and re-check the idle CO% reading.

Repeat Operations 5 and 6 until the correct CO% reading is achieved.

When correctly set, remove the sample probe and fit a new tamperproof plug to the fuel metering unit.

Connect the purge line if applicable.

Note Accurate setting of the idle CO is critical to ensure satisfactory engine performance.

Because of this, it is recommended that a final idle speed and CO check is carried out immediately after road testing the motor car. This is always the best time to take accurate CO readings.

Idle speed – To set

Note It is important that the test equipment used to set the idle speed meets the following specification. Accuracy – Rotational speed within ± 10 rev/min.

1. To set the idle speed, ensure that the engine has stabilized at its normal operating temperature. This can be achieved by allowing the engine to run at idle speed for at least 15 minutes after the thermostat has opened. The opening of the thermostat can be detected by a sudden rise in the temperature of the thermostat elbow pipe.

2. If a fuel evaporative emission control system is fitted, disconnect the purge line at the restrictor, leave the restrictor fitted into the hose to the engine (refer to Chapter G).

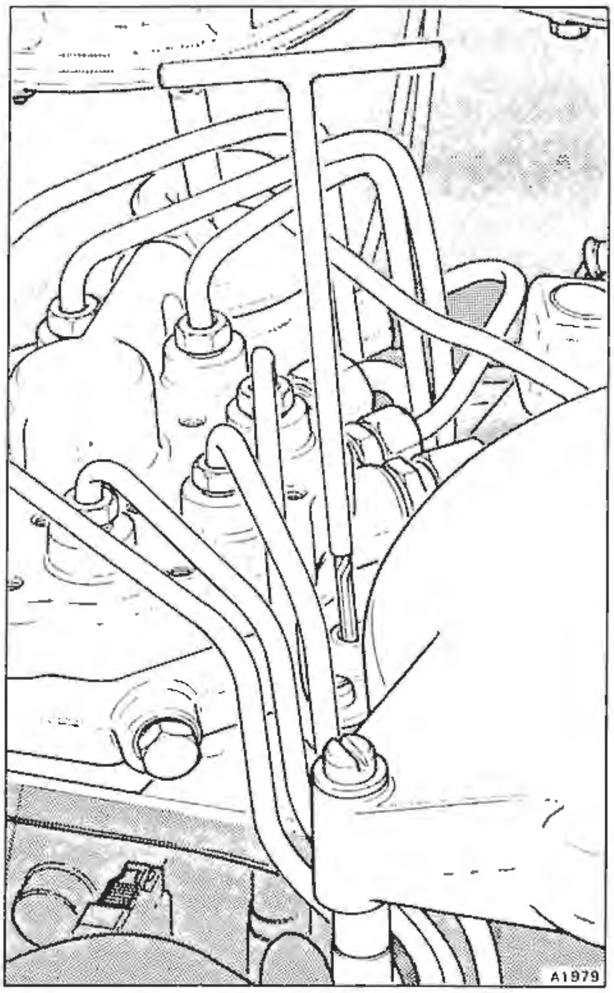

Fig. B3-42 Adjusting the idle mixture strength

3. Ensure that the gear range selector lever is in the park position.

4. Ensure that the automatic air conditioning system is switched off.

5. Open the engine oil filler. Set the engine idle speed to 580 rev/min by turning the adjustment screw situated on the side of the throttle body (see fig. B3-11).

6. Finally, check the operation of the idle speed solenoid (refer to Workshop procedure 17).

7. Stop the engine and connect all necessary hoses and cables.

Tamperproofing

Tamperproofing of the mixture strength adjusting screw is carried out by screwing a small blanking plug into the mixture strength adjusting screw access hole (see fig. B3-42), above the actual adjusting screw.

A small black plastic plug should then be pressed into position to complete the operation. If the plug is fitted onto the end of a guide rod and then inserted, it will assist in the fitting operation.

Fuel injection and Ignition control system

K-Motronic

With the introduction of the 1989 model year specification, turbocharged cars are equipped with a Bosch K-Motronic engine management system.

The K-Motronic system brings together the benefits of digital* fuel injection and ignition control systems into a single electronic control unit (ECU). Other features of the system include cold start and warm-up enrichment, idle speed regulation, and automatic correction of any long term mixture strength deviations.

On cars fitted with catalytic converters the K-Motronic system also provides an 'on-board' self diagnostic facility.

Note *Digital refers to an electronic data system where the information used is in discrete or quantized form (data in the form of digits), not continuous as with an analogue system.

The exhaust emission control systems (if fitted) include three catalytic converters (one warm-up converter and twin main converters), and air injection.

The fuel evaporative emission control system (if fitted) includes a charcoal absorption canister which is purged during specific engine operating modes.

A crankcase emission control system is fitted to all cars.

This section contains service information relating specifically to the K-Motronic digital system. Details for the other emission control systems are provided within their respective chapter (refer to the Contents page).

K-Motronic digital engine management system

The engine is equipped with several sensors that continuously monitor operating parameters such as engine speed, coolant temperature, and load (see fig. B4-19). The sensors are connected to a digital ECU which is programmed with characteristic data for the following functions, mixture strength control, ignition timing, idle speed control, purging of the evaporative emission control canister, and operation of the air injection system.

A separate electronic control unit is used for the boost pressure control system.

Fuel injection system

The Bosch KE3-Jetronic continuous fuel injection system incorporates certain components from the KE2-Jetronic system. In addition to digital electronic correction of the air/fuel mixture, the system also incorporates electronic regulation of the idle speed.

When the engine is running in the naturally aspirated mode, fuel delivery is directly proportional to intake air flow. During turbocharged modes of operation, electronic correction factors provide boost pressure compensation.

Control of the air/fuel ratio is provided by a mixture control unit, comprising an air meter and a fuel distributor (see fig. B4-2).

Multi-point, mechanical fuel injectors are fitted.

Electronic correction of the air/fuel ratio is provided for start and warm-up phases of engine operation.

To achieve compliance with strict emission control regulations, cars fitted with catalytic converters require adjustment to the air/fuel ratio during part load engine operation. This is achieved by using a 'closed-loop' (lambda) control system. In this system a heated oxygen sensor measures the oxygen content of the exhaust gases and continuously adjusts the fuel flow to maintain a stoichiometric air/fuel ratio.

Note Components within the system may look similar to those used on other systems. However, visual inspection should not be used to identify replacement parts, as internal calibrations may be different.

Air flow sensing

The air meter consists of an air venturi (cone) in which moves an air flow sensor plate mounted on a pivoted lever (see fig. B4-3).

When the engine is operating the sensor plate is deflected into the air cone; the deflection being dependent upon the volume of air passing through the cone (i.e. throttle plates opening). The air deflects the sensor plate until a state of hydraulic balance exists; this being due to the force of the air pressure acting across the sensor plate area and the primary fuel pressure acting over the control piston area.

The weight of the air sensor plate and connecting lever are balanced by a counterweight on the fuel distributor side of the lever.

Any movement of the air sensor plate and lever about the pivot pin is transmitted to the control piston in the fuel distributor and the ECU by a potentiometer.

The movement of the control piston and its horizontal control edge (see fig. B4-5) either increases or decreases the open area of the eight metering slits (one for each engine cylinder) in the fuel distributor.

Differential pressure valves (one for each cylinder) located within the fuel distributor, maintain a constant pressure drop across the metering slits.

The air flow sensor plate and the control piston are operated by the same lever. Therefore, the rate of basic fuel discharge is proportional to the deflection of the air sensor plate within the calibrated cone, as governed by throttle plate opening.

Idle CO (idle mixture strength) is set during manufacture. Adjustment should not be necessary but can be achieved by removing the tamperproof

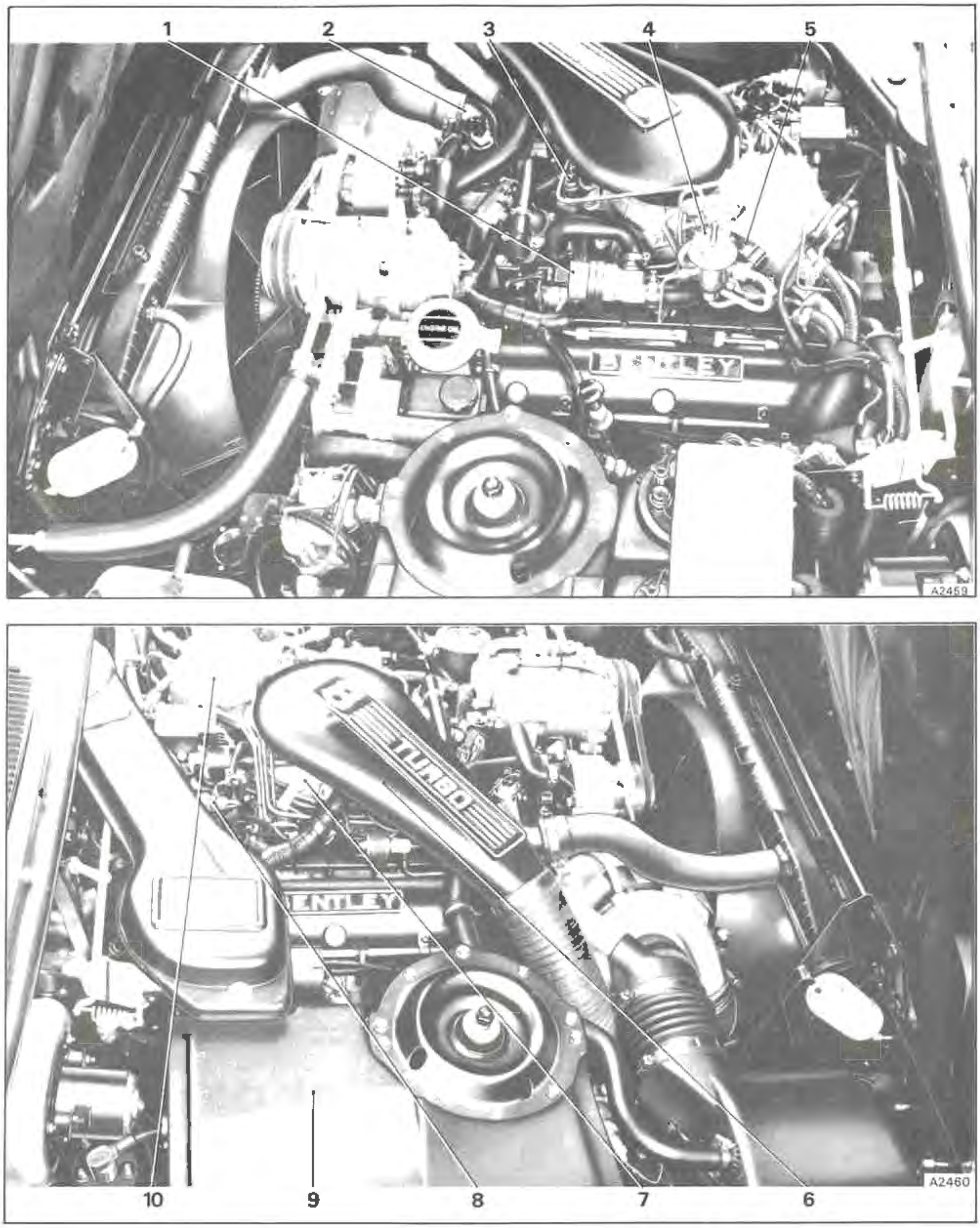

Fig. B4-1 Engine compartment details

1 Idle speed actuator
2 Thermostat housing outlet
3 Cold start injector
4 Fuel pressure regulator
5 Electro-hydraulic actuator
6 Air intake
7 Air meter
8 Air pressure transducer
9 ECU compartment cover
10 Fuel distributor

plug and rotating the idle mixture screw. The tamperproof plug should then be replaced and no further mixture adjustment should be necessary.

This basic adjustment alters the relationship of the air flow sensor plate position to that of the control piston in the barrel of the fuel distributor.

Fuel circuits

Fuel pressures within the KE3-Jetronic fuel circuit are as follows.

Primary pressure	6,2 bar to 6,4 bar (89.9 lbf/in^2 to 92.8 lbf/in^2)
Differential pressure valves (lower chambers)	5,7 bar to 5,9 bar (82.65 lbf/in^2 to 85.55 lbf/in^2)
Fuel injector pressure	4,0 bar to 4,1 bar (58.0 lbf/in^2 to 59.4 lbf/in^2)

Primary fuel circuit

Primary fuel pressure is controlled by the fuel pressure regulator (see figs. B4-4 and B4-9).

An electrically driven pre-pump, mounted inside the fuel tank, supplies fuel to the inlet of the main pump. Fuel delivery to the fuel distributor is then via a pressure damper, a fuel accumulator, and a fine mesh filter.

Fuel initially enters passages in the fuel distributor where the pressure is held constant (primary system pressure) by means of a pressure regulator. Excess fuel from the regulator flows through a fuel cooler (incorporated with the vehicle's automatic air conditioning system) and a one-way valve as it returns to the tank via the fuel return line.

In the fuel distributor, movement of the control piston within the barrel allows metered fuel to pass through the fuel distributor slits, to the upper side of the diaphragm in each differential pressure valve (see fig. B4-5).

The fuel entering the upper chamber of a differential pressure valve, deflects the diaphragm away from the open end of the injector fuel line and thereby allows fuel to flow to the injector.

The fuel injectors have an opening pressure of between 4,0 bar and 4,1 bar (58.0 lbf/in^2 and 59.4 lbf/in^2) and are designed to spray finely atomized fuel under all operating conditions.

The primary fuel circuit also feeds fuel to provide the hydraulic force that is applied above the control piston. This provides the hydraulic balancing force for the air load acting on the air sensor plate.

Primary fuel pressure is supplied to the cold start injector and to the electro-hydraulic actuator (EHA).

When the engine is stopped, the fuel pressure regulator allows system pressure to drop rapidly to a pressure governed by the fuel accumulator. This is just below fuel injector opening pressure.

The retention of fuel at this pressure during 'hot soak' conditions minimizes fuel vaporization.

A sudden drop in fuel pressure when the engine is stopped closes the injectors and prevents dieseling (the tendency of an engine to continue 'running-on'

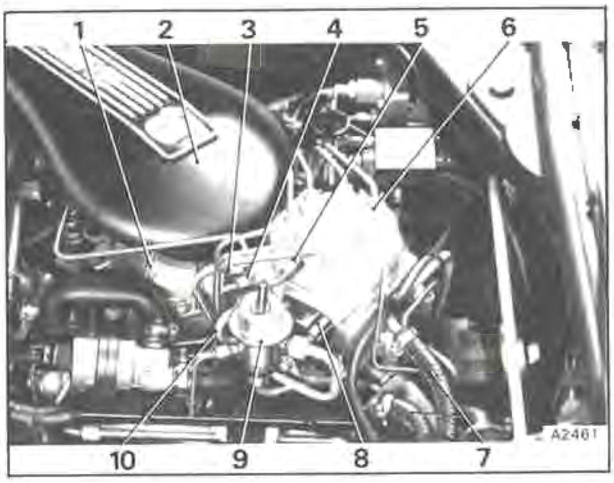

Fig. B4-2 Mixture control unit
1 Air meter
2 Air intake
3 Fuel supply to distributor
4 Fuel return to tank via pressure regulator
5 Fuel feed to cold start injector
6 Injector pipe
7 Hydraulic system pipes
8 Electro-hydraulic actuator
9 System pressure regulator
10 Fuel feed to pressure regulator

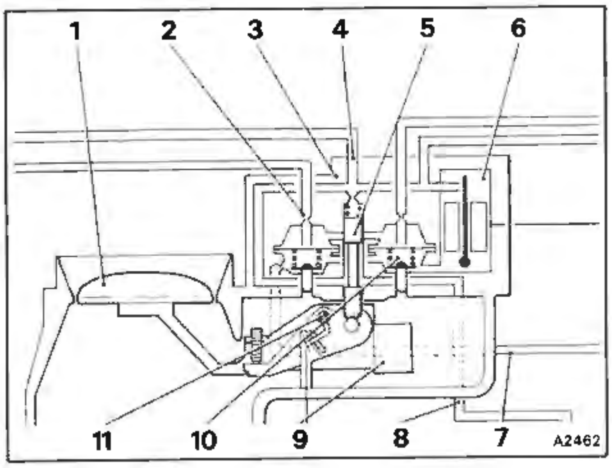

Fig. B4-3 Air flow sensor and fuel distributor (mixture control unit)
1 Air flow sensor plate
2 Fuel line to injector
3 Fuel distributor
4 Fuel line to cold start injector
5 Control piston
6 Electro-hydraulic actuator (EHA)
7 Fuel return line to pressure regulator
8 Fuel supply line
9 Counterbalance weight
10 Differential pressure valve
11 Pivot

Printed in England

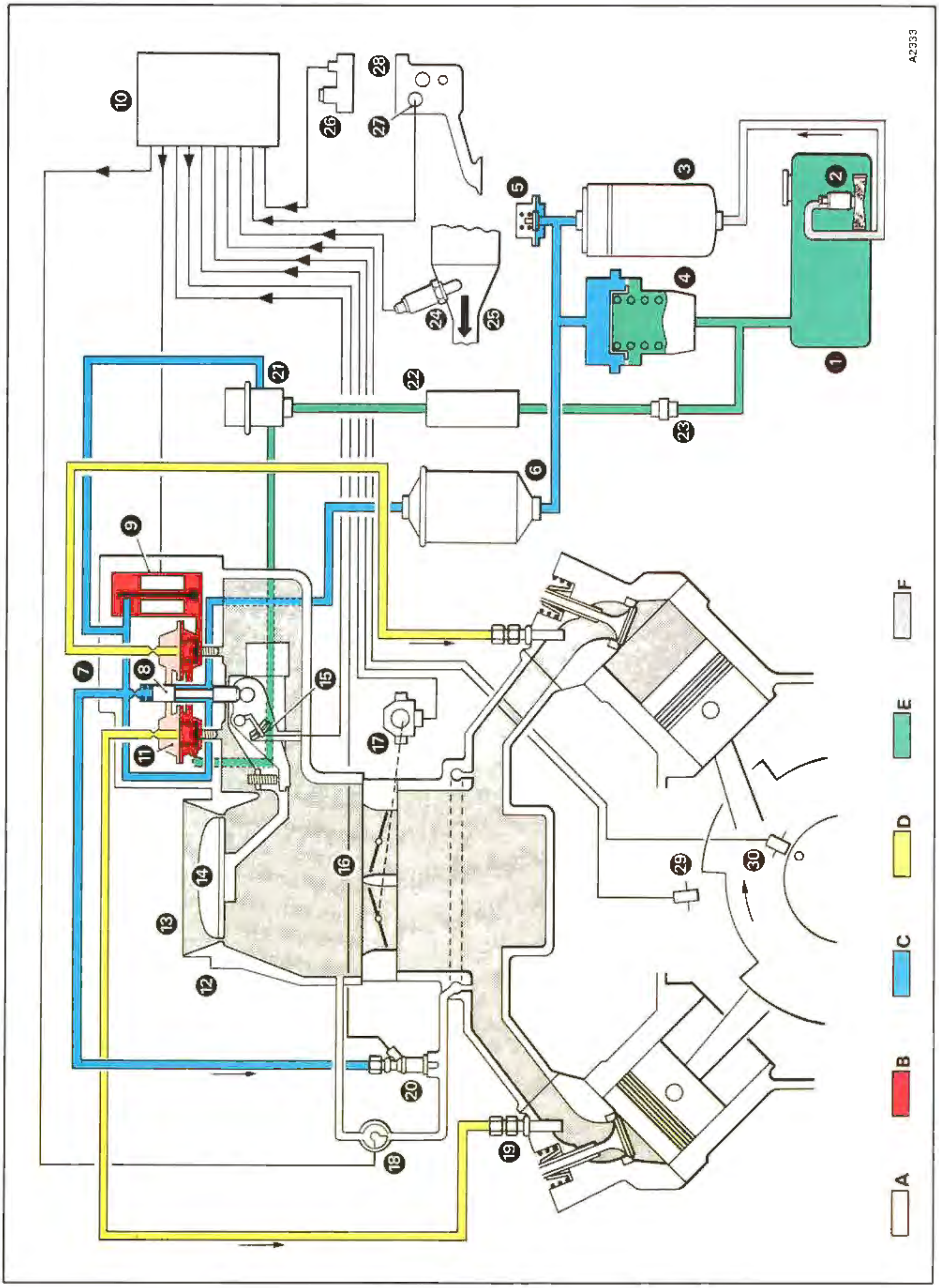

Fig. B4-4 Fuel injection system

Key to fig. B4-4 Fuel injection system

1	Fuel tank
2	Fuel pre-pump
3	Fuel pump
4	Fuel accumulator
5	Fuel pressure damper
6	Fuel filter
7	Fuel distributor
8	Control piston
9	Electro-hydraulic actuator (EHA)
10	Electronic control unit (ECU)
11	Differential pressure valve
12	Air cone
13	Air meter
14	Air sensor plate
15	Air flow sensor potentiometer
16	Throttle body
17	Throttle position switch
18	Idle speed actuator
19	Injector
20	Cold start injector
21	Fuel pressure regulator
22	Fuel cooler
23	Non-return valve
24	Heated oxygen sensor
25	Warm-up catalytic converter
26	Air pressure transducer (APT)
27	Temperature sensor
28	Thermostat housing
29	Engine speed sensor
30	Crankshaft reference sensor
A	Upper chamber pressure
B	Lower chamber pressure
C	Primary circuit pressure
D	Injection pressure
E	Unpressurized return line
F	Pre-pump pressure

Note Items 24 and 25 are only fitted to cars with catalytic converters

after the ignition has been switched off).

Fuel distribution

Fuel is distributed uniformly to the cylinders via an accurately machined control piston and barrel assembly (see figs. B4-4 and B4-8). This assembly operates by controlling the open cross sectional area of the metering slits machined in the barrel.

The barrel has one rectangular metering slit for each cylinder.

Depending upon the position of the piston in the barrel, the metering slits are opened a corresponding amount. This allows fuel to flow through the openings to the differential pressure valves.

Each metering slit has a differential pressure valve.

If the air flow sensor plate travel is small, the control piston will only be raised in the barrel a small amount. This only allows a small section of the metering slits to be opened for the passage of fuel.

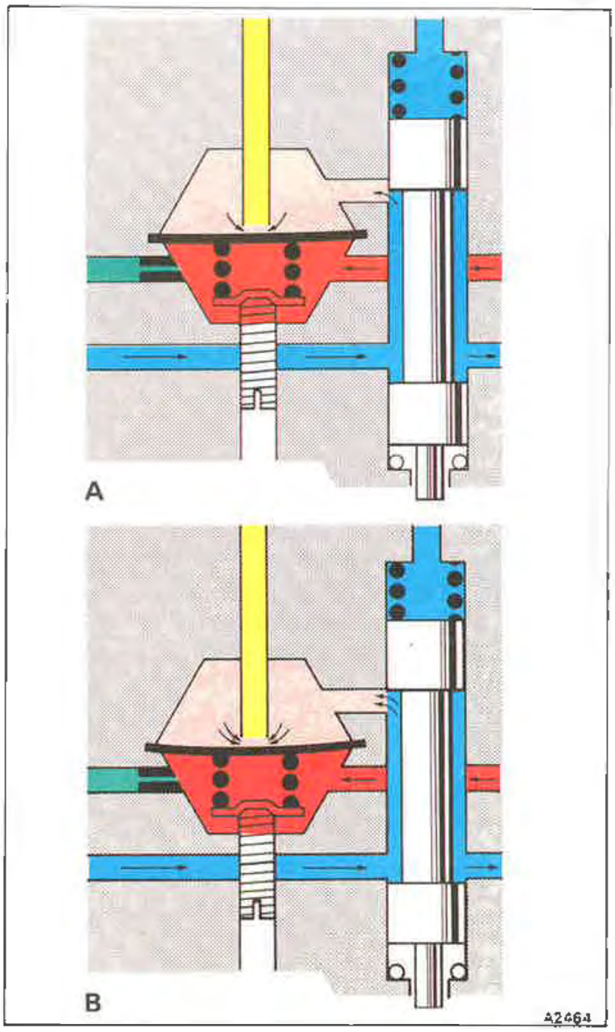

Fig. B4-5 **Differential pressure valve**
A Low flow rate
B High flow rate

A hydraulic force is applied on top of the control piston and acts in opposition to the movement of the air flow sensor plate, lever, and control piston. A constant air/fuel pressure drop at the sensor plate is the result. This ensures that the control piston always follows the movement of the sensor plate lever.

A restrictor between the primary fuel circuit and the top of the control piston provides air sensor plate damping. This avoids small fluctuations of the air sensor plate, particularly during low engine speed operation when the air flow through the air meter is pulsating.

A spring is fitted above the control piston to assist the hydraulic force. It prevents the control piston being drawn upwards in the barrel due to a vacuum effect when the engine is stopped and the system cools down. If the control piston was drawn up in the barrel it could cause an excessively rich mixture when the engine is started again.

When the engine is switched off, the control piston sinks until it rests on the axial sealing ring.

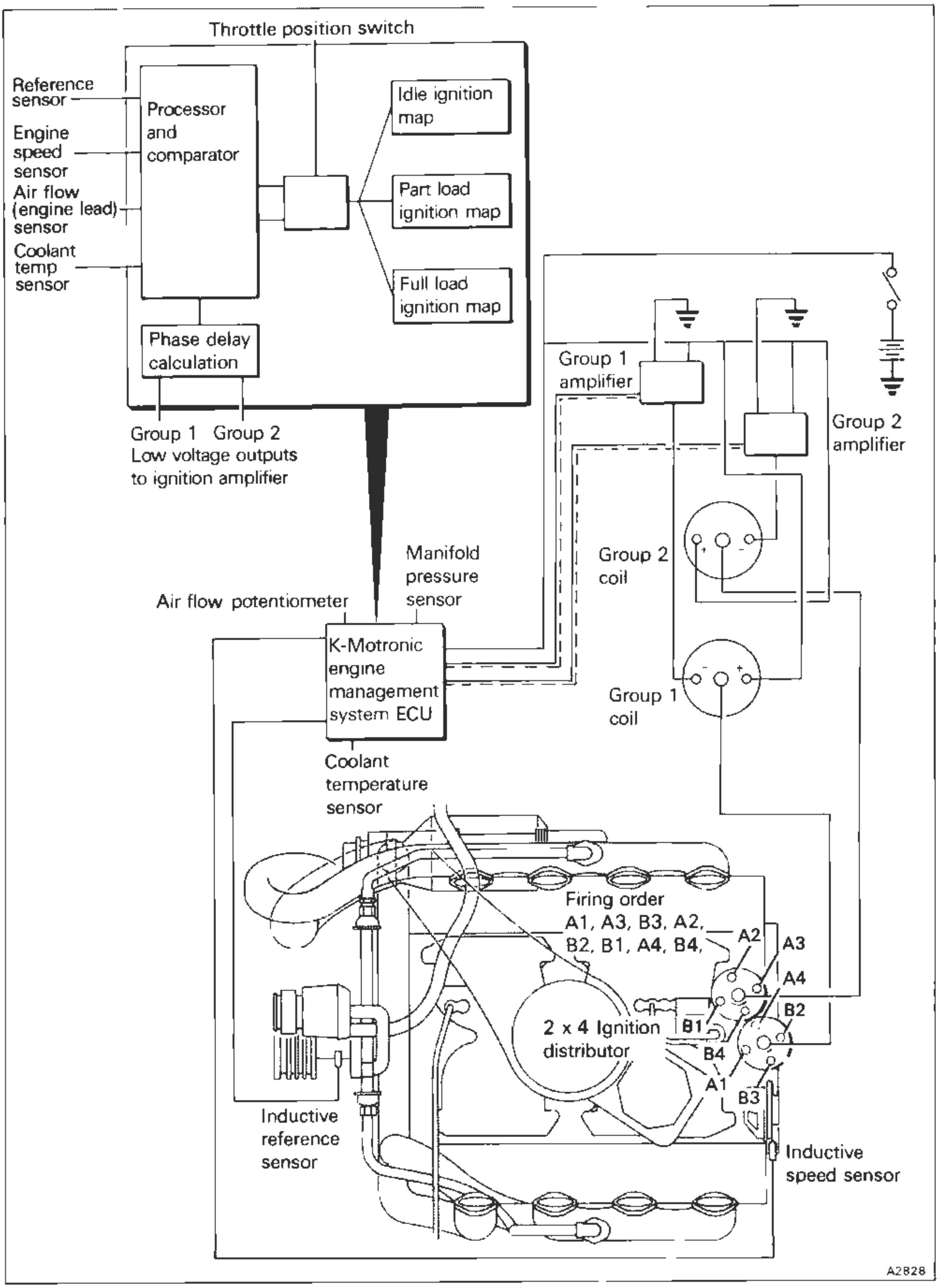

Fig. B4-6 Ignition control system

This position is set during manufacture and ensures complete closure of the metering slits when the piston is in the rest (zero lift) position. When the piston is resting on the sealing ring and the engine is switched off, the seal prevents primary system fuel leakage past the piston. This would otherwise allow fuel accumulator pressure to be lost too quickly.

Differential pressure valves

There is a differential pressure valve for each engine cylinder (see figs. B4-3 and B4-5).

These valves are a diaphragm type consisting of an upper and lower chamber with the diaphragm separating the two halves.

The purpose of these valves is to maintain a given pressure drop at the metering slits. The pressure differential between the two halves of the valve is maintained irrespective of the fuel flow.

The difference in fuel pressure between the upper and lower chambers (and therefore the metering slits) is approximately 0,2 bar (3 lbf/in^2). Basically this is determined by the helical spring operating in the lower chamber of each valve.

The lower chambers are connected to one another by a ring main.

The upper chambers are completely sealed from one another but are connected to the metering slits. Each chamber contains a valve seat and is connected to its respective injector line.

If an increased fuel flow enters the upper chambers, the pressure is increased and the diaphragms are deflected downwards. This opens the outlet end of the injector lines allowing the fuel flow to increase until the preset differential pressure is restored.

If the fuel flow decreases, the pressure in the upper chambers will fall allowing the diaphragms to lift. This reduces the fuel flow to the injectors until the pressure differential again prevails.

The total travel of the diaphragm is only a few hundredths of a millimetre.

By varying the fuel pressure in the lower chambers of the differential pressure valves, fine control of the fuel flow rate (mixture strength) can be achieved.

In addition to the helical spring, the fuel pressure in the lower chambers is further affected by the operation of the EHA attached to the side of the fuel distributor. This is used to vary the fuel pressure in the lower chambers in response to signals from the ECU. In general, the mixture strength becomes richer with increasing current to the EHA.

An additional fuel filter incorporating a separator for ferromagnetic contamination is fitted in the fuel line to the EHA.

Ignition system

The ignition system is an integral part of the engine management K-Motronic system and consists of two driver stages which amplify ECU signals to the low tension side of the ignition coils. The coils generate high tension outputs which are distributed to the sparking plugs in two groups, via a twin rotor distributor assembly (four cylinders per rotor).

Part load ignition timing is dependent upon engine load and speed and is generated from a characteristic map. Engine load is sensed by the air meter potentiometer and engine speed by the engine speed sensor, mounted adjacent to the segment wheel at the rear of the engine.

The potentiometer is attached to the air flow sensor plate lever and reflects any change in the amount of metered air entering the induction system. The electrical signal generated within the potentiometer by the movement of the sensor plate is then transmitted to the K-Motronic ECU to become a measure of engine load.

The timing wheel fitted to the rear of the crankshaft, has four segments of equal length at its periphery, separated by four gaps which are also of equal length but longer than the segments. Rotation of the four segment timing wheel generates a fixed duty cycle which is sensed by the engine speed sensor and transmitted to the K-Motronic ECU.

The K-Motronic ECU also receives a signal from the crankshaft reference sensor located at the front of the engine. As a reference pin rotating with the crankshaft, passes the sensor it triggers A1 ignition and the subsequent firing order for the eight engine cylinders. Co-ordination with the segment wheel ensures the correct ignition timing.

Ignition angles for operation at idle and at full throttle are dependent upon engine speed. They are governed by separate characteristic curves programmed into the ECU.

Ignition timing during cold starting and warm-up is also dependent upon engine coolant temperature.

Sparking plugs

NGK BPR 4EVX sparking plugs are used. The sparking plugs comprise a precious metal centre electrode surrounded by a ceramic insulating material whose relative positions are located by a metal housing. The central electrode and insulator are designed to project beyond the end of the metal housing to improve combustion efficiency. The ground electrode, attached to the leading edge of the housing, is extended to form an air gap across which the spark is induced to jump.

'Closed-loop' mixture control system (lambda control system)

Cars fitted with catalytic converters also have a 'closed-loop' lambda control system.

The lambda control system is an addition to the KE3-Jetronic fuel injection system and is fitted to give increased control of the air/fuel ratio about the stoichiometric value.

With an ideal (stoichiometric) air/fuel mixture the air factor is identified by the value λ (lambda) = 1 (under boost and at full load = 0.83 to 0.95).

$$\lambda = \frac{\text{Actual air intake}}{\text{Theoretical requirement}}$$

In order to achieve optimum three-way catalytic conversion efficiency, a stoichiometric air/fuel ratio must be accurately maintained.

This is achieved by means of an oxygen sensor located in the exhaust system, in conjunction with the K-Motronic engine management system ECU (see fig. B4-7). The ECU provides a control signal to the EHA, oscillating between pre-set threshold limits and regulating the fuel pressure in the lower chambers of the differential pressure valves. Increased fuel flow through the EHA will increase the pressure in the lower chambers, simultaneously, the pressure in the upper chambers increases by the same amount. As a result, the pressure drop across the metering slits in the fuel distributor is decreased which in turn decreases the fuel flow to the injectors. Decreasing the flow through the EHA has the opposite effect.

Automatic altitude compensation

Cars fitted with catalytic converters also have automatic altitude compensation. Due to lower air density at high altitudes, the volumetric air flow measured by the air meter corresponds to a lower air mass flow than at low altitudes. Operation at high altitude would therefore, have a richening effect on the air/fuel mixture ratio. In practice however, this is initially compensated for by the lambda 'closed-loop' control system. Also, the engine management system incorporates a function for permanent correction of any long term drift in mixture strength due to such variations as air density (refer to adaptive lambda pre-control).

Altitude compensation is therefore, available until both the above control functions are at the limit of their control range and is effective to an altitude of 4267 m (14 000 ft) above sea level.

Adaptive lambda pre-control

Cars fitted with catalytic converters also have adaptive lambda pre-control. This is a function of the engine management system which makes a permanent correction for any long term changes in mixture strength. It is integrated with the lambda 'closed-loop' system within the engine management system ECU and corrects for mixture strength deviations due to engine ageing, minor air leaks, altitude, environmental changes, and variations in fuel density.

This allows the lambda 'closed-loop' system to continue to operate around the centre of its control range and to maintain its full capability of correcting for any temporary variations in mixture strength.

The pre-control system operates by monitoring the output from the lambda 'closed-loop' integrator (i.e. the average EHA current required to maintain a

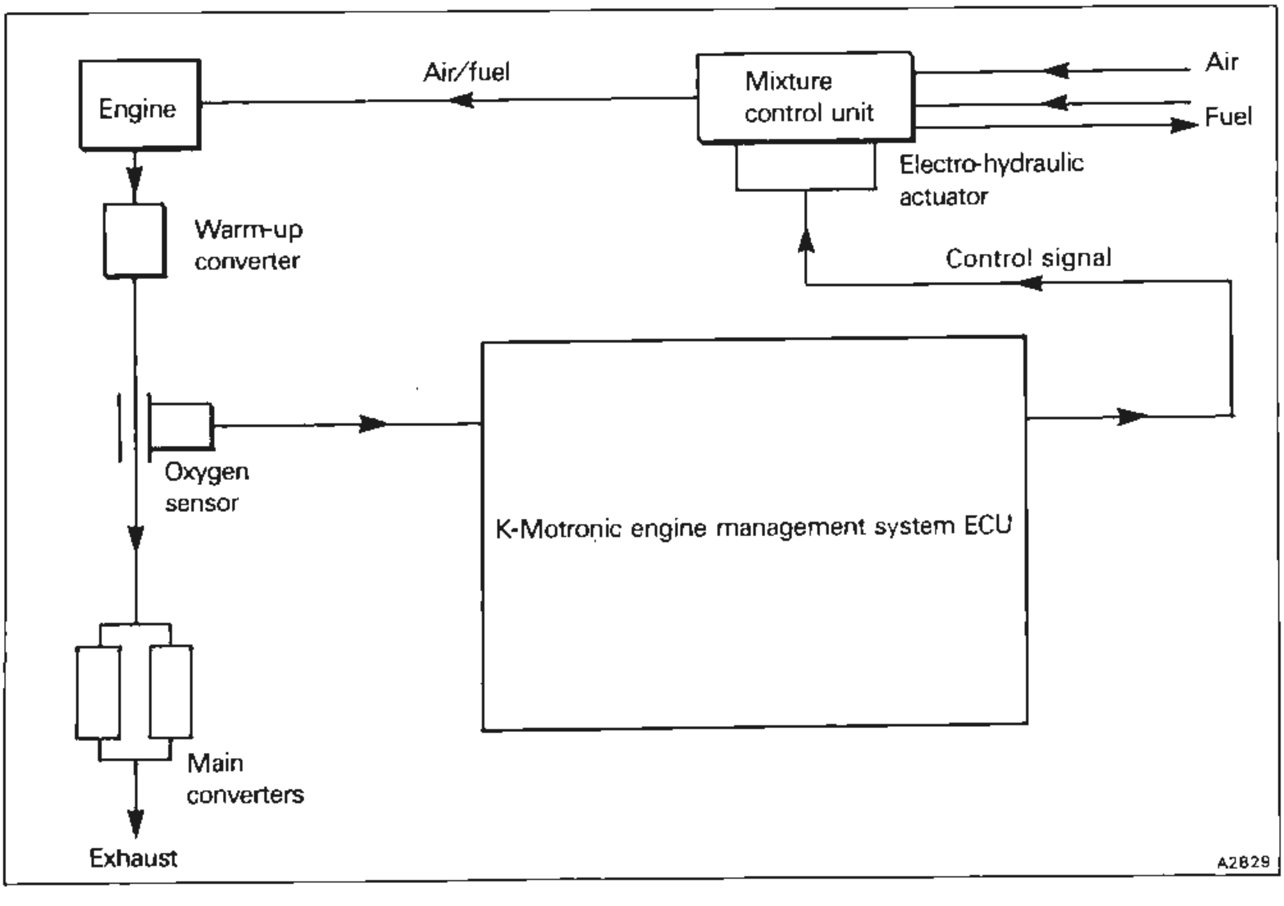

Fig. B4-7 'Closed-loop' mixture control system stoichiometric air fuel ratio). If the average correction factor over a predetermined time period is different from the initial value, then the factors are stored in random access memories in the ECU and are subsequently used and updated during the next period of engine operation.

Lambda pre-control is active in two areas of engine operation, which are defined by air flow rate and engine speed thresholds. At low engine speeds and low air intake flow rates (i.e. at idle and small throttle openings) permanent additive corrections are made. In this area, malfunctions such as an induction system air leak or an incorrect idle mixture setting would be detected and necessary correction factor applied.

At higher engine speeds and loads (but not at full throttle) permanent multiplicative corrections are made. In this area corrections are made for variations in air and fuel density and for gradual changes due to engine wear.

If the K-Motronic ECU is disconnected for any reason (i.e. removal or battery isolation) it results in a loss of ECU stored memory. When the engine is started the ECU will have to go through its learning process again.

Lambda pre-control is only active during the engine operating modes described in the proceeding paragraphs, when the 'closed-loop' mixture control system is functioning. It does not operate during a period of open loop fuelling control, such as a period following a cold start or when the engine management system is in failure mode. When the evaporative emission control canister is being purged, lambda pre-control is active but the correction factors are not stored.

On-board fault diagnosis capability

Cars fitted with catalytic converters also have an engine fault warning lamp on the vehicle instrument panel to alert the driver to a possible engine related fault. The lamp displays the message CHECK ENGINE and remains illuminated, whenever the ignition is switched on, until the malfunction has been diagnosed and corrected.

The engine management system ECU continuously monitors the inputs from sensors critical to emission control system operation. If a signal is outside the specified limits programmed into the ECU, the engine check lamp is illuminated and a fault message (in the form of a four digit code) is stored within the ECU and subsequently used to inform workshop personnel of the faulty component or system.

The warning lamp is not always illuminated when a fault is identified. In these instances however, the fault code is still stored in the ECU and can be retrieved in the usual manner during workshop diagnosis.

Diagnosis in the workshop can be made either with the engine idling or with the engine stationary and the ignition switched on. It is carried out by depressing a diagnostic button located on the vehicle fuseboard for a minimum of four seconds (see fig. B4-8). This provides a ground connection for ECU pin 13 which initiates a read-out programme, causing the stored fault codes to be sequentially displayed as blink codes on the engine check lamp. If there is more than one malfunction the system continues to display the first registered fault code until either the fault has been cleared or the system has been reset. Each blink code begins with a start signal of 2.5 seconds lamp on, 2.5 seconds lamp off. The lamp flashes on for 0.5 seconds and off for 0.5 seconds in accordance with the stored code. There is a lamp off period of 2.5 seconds between each digit.

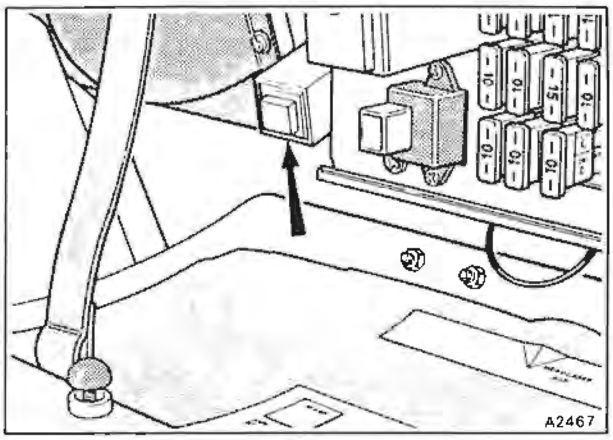

Fig. B4-8 Diagnostic button

Examples of blink codes are shown in the servicing section of this chapter.

If faults are not corrected and the vehicle continues to be used, the system can be returned to its monitoring role by raising the engine speed above 3000 rev/min. The check engine lamp will continue to be illuminated.

When a fault has been corrected, raising the engine speed above 3000 rev/min will extinguish the warning lamp.

When all fault codes have been shown during diagnosis, the output end code 1-1-1-1 is displayed. If no faults are detected then the code 4-4-4-4 is given.

Engine speed limiting

Engine speed is limited by interrupting the fuel flow to the injectors.

The engine management system ECU senses engine speed, by means of a signal from the inductive sensor at the rear of the engine.

When the speed of the engine reaches 4600 rev/min the signal triggers an ECU function which causes the current to the EHA to oscillate at a constant frequency between a fixed negative value and the last known positive value.

The negative EHA correction has the effect of increasing the pressure in the lower chambers of the fuel distributor. This raises the diaphragm of each differential pressure valve and stops the fuel flow to the injectors.

Description of the components

Fuel injector (see fig. B4-9)
A fuel injector is fitted into the inlet port just behind each inlet valve.

The injector opening pressure is between 4,0 bar and 4,1 bar (58.0 lbf/in^2 and 59.4 lbf/in^2). It has no metering functions, its purpose being to continually spray finely atomized fuel under ell running conditions.

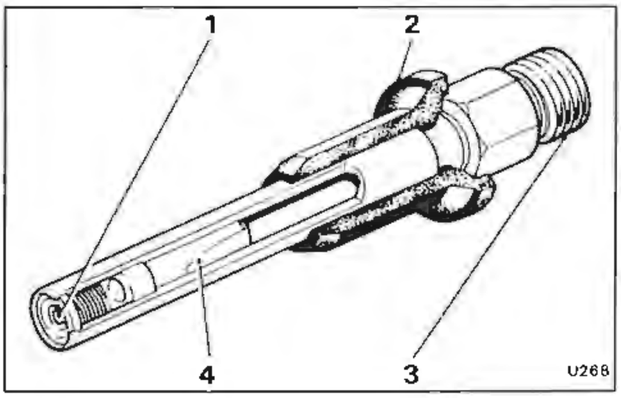

Fig. B4-9 Injector valve
1 Nozzle
2 Insulating sleeve
3 Fuel supply connection
4 Filter

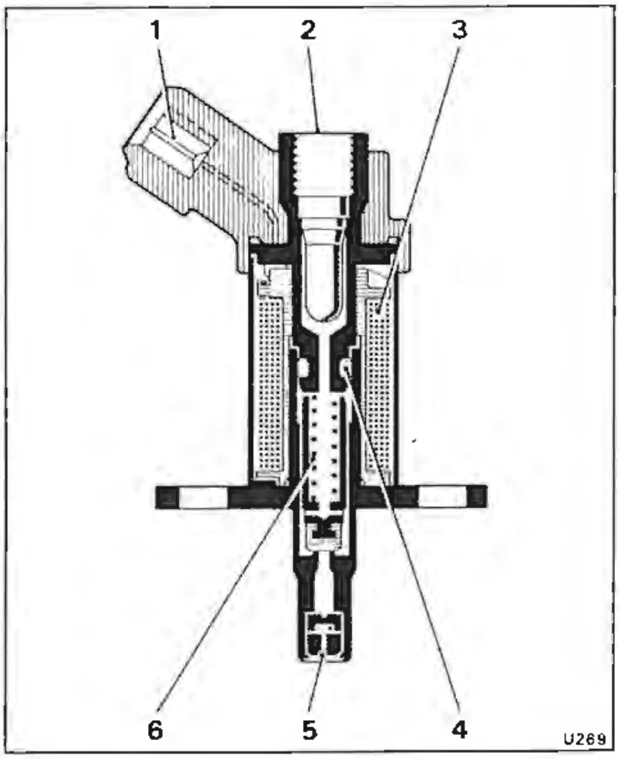

Fig. B4-10 Cold start injector
1 Electrical connection
2 Fuel inlet
3 Magnetic coil
4 Sealing ring
5 Swirl nozzle
6 Armature

The injector is supported in an insulating moulded rubber sleeve. It is pressed (not screwed) into position. The hexagonal section is provided to hold the injector while the fuel line is attached.

A retention plate is fitted over the injector and secured by two small setscrews, each plate retaining two injectors.

Cold start injector (see fig. B4-10)
Cold start injector control is computed by the ECU and sprays fuel into the induction manifold air galleries. The duration and quantity of fuel injected is dependent upon the engine coolant temperature. This is indicated by a temperature sensor in the thermostat housing (see fig. B4-14). The ECU is programmed with a coolant temperature dependent data characteristic curve from which it computes a duty cycle between 0% and 100%, and allows up to 10 seconds of injection time.

Under normal engine operation there is no cold start injection above a coolant temperature of 16°C (60°F). However, in high ambient air temperatures the cold start injector can provide hot start enrichment. A duty cycle of 10% is applied, providing a slow rate of injection, if the coolant temperature is above 100°C (212°F) and if the engine has not started after cranking for approximately two seconds.

The cold start injector incorporates a helical spring which presses a moveable armature and seal against the valve seat, closing the fuel inlet. When the armature is energized (and therefore drawn upwards) the fuel port is opened and the pressurized fuel flows along the sides of the armature to the swirl nozzle.

Air flow sensor plate (see fig. B4-3)
The sensor plate is housed in the cone of the air meter. Its function is described on page B4-1, under the heading of Air flow sensing.

A stabilizer is fitted on top of the air flow sensor plate. Its purpose being to improve the air flow around the sensor plate at high flow rates and provide sensor plate stability.

Differential pressure valves (see fig. B4-5)
The differential pressure valves (one for each engine cylinder) are housed in the fuel distributor. Their function is described on page B4-7 under the heading of Differential pressure valves.

Fuel distributor (see fig. B4-3)
The fuel distributor forms part of the mixture control unit. Its function is described in the section relating to fuel distribution on page B4-5.

Control piston (see fig. B4-11)
This is a cylindrical plunger type of valve that moves vertically in the fuel distributor. It is operated by a lever connected to the air flow sensor plate.

A precision machined edge on the control piston uncovers the fuel metering slits in the fuel distributor barrel. This controls the amount of fuel injected into the engine cylinders.

Fuel pressure regulator (see fig. B4-12)
When the engine is operating primary fuel pressure is maintained by the fuel pressure regulator.

Fuel from the main fuel pump and via the fuel distributor enters the regulator through the port on the right-hand side. Fuel returning from the fuel distributor differential pressure valve lower chambers enters the regulator via the connection on the left-hand side. The fuel return line (to the tank) is situated at the bottom of the assembly.

High pressure fuel returning from the fuel distributor enters the fuel pressure regulator via the inlet port. This fuel pressure pushes the diaphragm up against control spring pressure. This relieves the downward pressure on the valve body. The valve body will now be pushed upwards by the counterspring until it reaches its mechanical stop.

This action opens the return line and allows fuel from the differential pressure valve lower chambers and control plunger fuel leakage to return to the fuel tank via the return port.

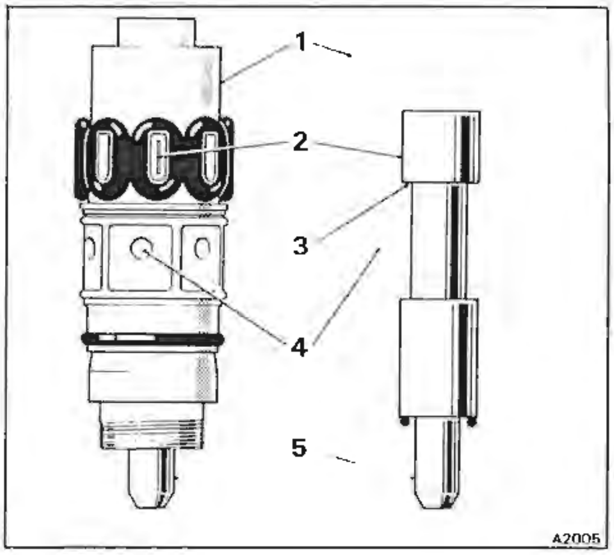

Fig. B4-11 Fuel distributor barrel and control piston
1 Fuel distributor barrel
2 Fuel metering slits
3 Piston control edge
4 Fuel inlet ports
5 Control piston

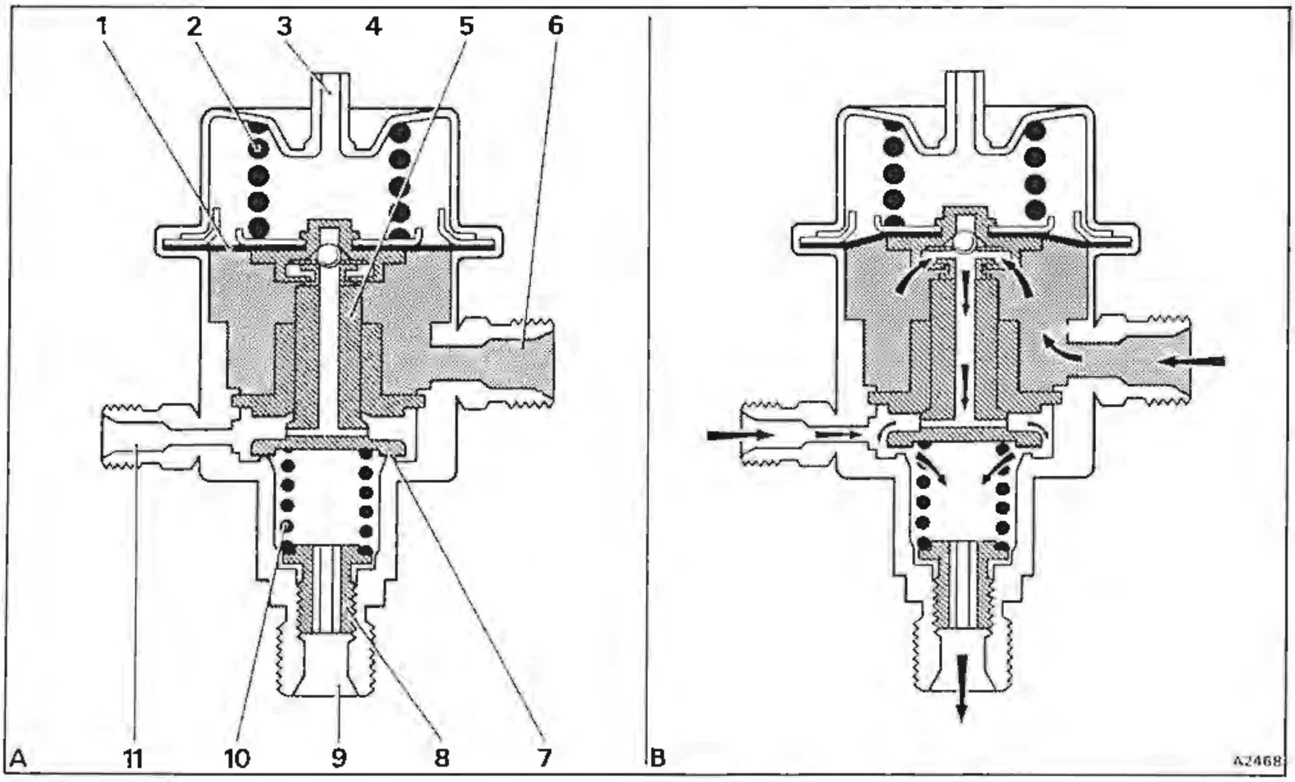

Fig. B4-12 System pressure regulator
1 Diaphragm
2 Control spring
3 Vent to atmosphere
4 Plate valve
5 Valve body
6 Inlet
7 Seal
8 Adjustment screw
9 To fuel tank
10 Counterspring
11 From fuel distributor
A Regulator closed
B Regulator opened

As the fuel pressure under the diaphragm increases, the valve plate is lifted which allows fuel to flow through the drilling in the valve body. This in turn causes a pressure drop below the diaphragm. The control spring then pushes the diaphragm down which pushes the valve plate down restricting the fuel returning through the valve body.

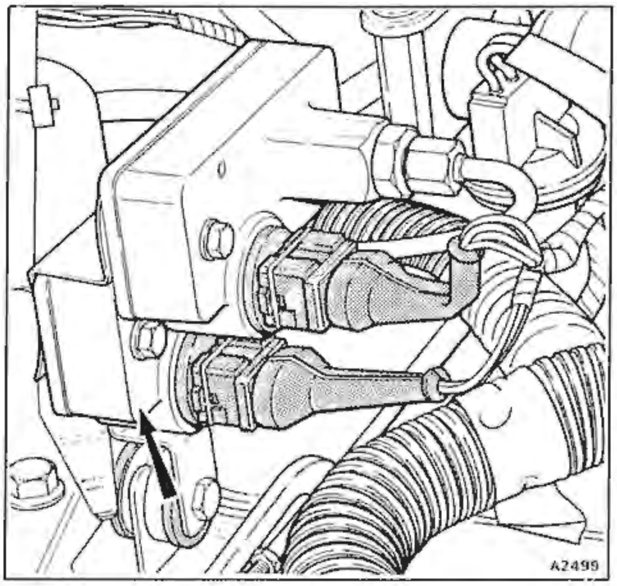

Fig. B4-13 **Air pressure transducer**

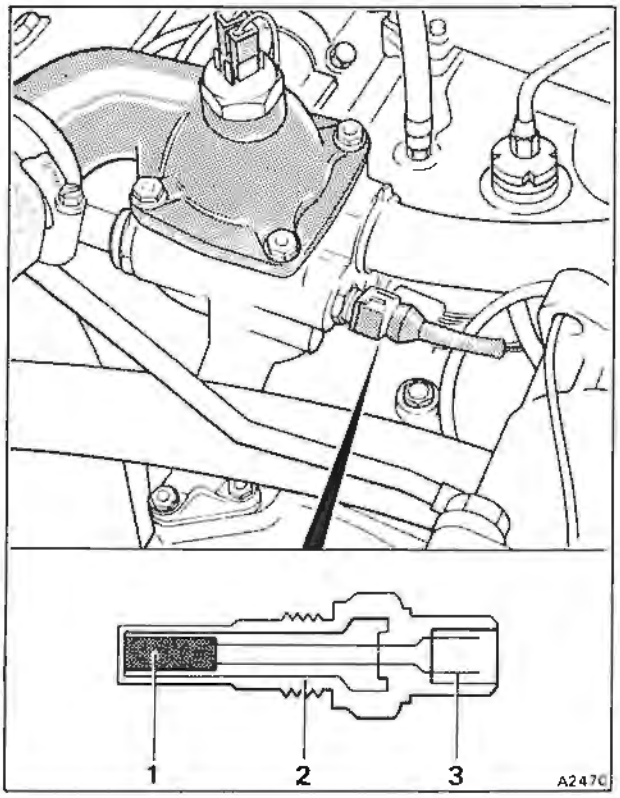

Fig. B4-14 **Engine coolant temperature sensor**
1 Resistor
2 Housing
3 Electrical connections

At this point fuel pressure below the diaphragm and the control spring are in equilibrium, hence the fuel pressure will be stable.

When higher power output is required from the engine a higher volume of fuel will need to be supplied with as little fluctuation in fuel pressure as possible.

As this demand is made there will be a split second reduction in the fuel pressure that is being fed into the inlet. At this point the control spring will push the diaphragm down which causes the valve plate to restrict the flow of returning fuel. This action will cause the fuel pressure to stabilize at the pre-determined limit again, whilst allowing the engine a higher volume of fuel.

This process is reversed when the fuel demand is reduced.

When the engine is switched off, the fuel pumps stop and the system pressure drops rapidly. As this pressure reduction occurs the control spring pushes the diaphragm, valve plate and valve body downwards very rapidly. This action completely seals off all the fuel return lines to the fuel tank and allows the fuel accumulator to maintain a reduced pressure in the system for some considerable time.

Anti-suction spring
When the engine is switched off and starts to cool, it is possible for some fuel to vaporize. This can cause a depression above the control piston as the fuel condenses. The result being a tendency for the piston to be drawn upwards in the barrel by the vacuum effect. In these conditions an excessively rich mixture would be fed to the engine when it is again started.

To prevent this a spring is fitted into the fuel distributor above the control piston. The applied force of the spring on the piston, prevents it being drawn upwards in the barrel.

Air pressure transducer (APT) (see fig. B4-13)
The air pressure transducer converts induction manifold pressure/vacuum changes into a varying electrical signal that the engine management system ECU can process.

Coolant temperature sensor (see fig. B4-14)
The coolant temperature sensor is located in the thermostat housing. The internal resistance of the sensor changes with the engine coolant temperature. Therefore, the signal it transmits to the engine management system ECU is a direct relationship to engine coolant temperature.

To improve engine running when starting at low temperatures, the ECU uses the signal it receives from the coolant temperature sensor to help compute the correction factors for the ignition timing and the fuel injection system EHA.

Throttle position switch (see fig. B4-15)
This switch is mounted on the side of the throttle

body on the primary throttle spindle, the switch identifies idle, overrun, part load, and full load engine operation. This information is signalled to the engine management system ECU to help compute the correction factors for the ignition timing and the fuel injection system EHA, etc.

Air flow sensor potentiometer (see fig. B4-16)
The potentiometer monitors air flow sensor plate and lever moment, and thus the metered air entering the induction system.

The electrical signal generated within the potentiometer by the movement of the sensor plate lever is conveyed to the K-Motronic engine management system ECU, as a measure of engine load. It is used by the ECU in the calculations of correction factors for both the fuel injection system and the ignition control system.

Fuel injection system
The engine fuelling requirements are calculated by the K-Motronic ECU using information supplied by the air flow sensor potentiometers. Any necessary corrections are transmitted to the EHA which continually adjusts the air/fuel ratio.

Ignition control system
Part load ignition timing is dependent upon engine load and speed, and is generated by the K-Motronic ECU from a characteristic map. Engine load is sensed by the air flow sensor potentiometer and engine speed, by the sensor mounted adjacent to the timing wheel at the rear of the engine (see fig. B4-62).

Electro-hydraulic actuator (EHA) (see fig. B4-17)
This assembly incorporates two polarity conscious electrical pin connectors in addition to a plastic location pin. The plastic location pin ensures that reversal of the pin connectors does not occur.

Depending upon the milliamps (mA) relating signal received from the ECU (i.e. information as to the operating conditions of the engine) the EHA varies the fuel flow to the lower chambers of the differential pressure valves.

An increase or decrease in the milliamps (mA) supply from the ECU to the EHA will result in a corresponding change in the fuel flow to the injectors and hence the CO concentration. An increase in mA signal to the EHA will increase the mixture strength.

This alteration in mixture strength is not related directly to any mechanical air flow measurement.

K-Motronic engine management systems ECU (see fig. B4-18)
The ECU evaluates input data from the various engine mounted sensors. With this information the ECU computes correction signals for both the fuel injection system and the ignition control system.

Heated oxygen sensor (see fig. B4-22)
Fitted to cars with catalytic converters.

The oxygen sensor (part of the lambda control system) measures the oxygen content in the exhaust gas and by means of an electrical signal transmits the information to the K-Motronic ECU.

The assembly consists of a sintered zirconium dioxide ceramic, impregnated with certain metal oxides. The surfaces of the tube are coated with a

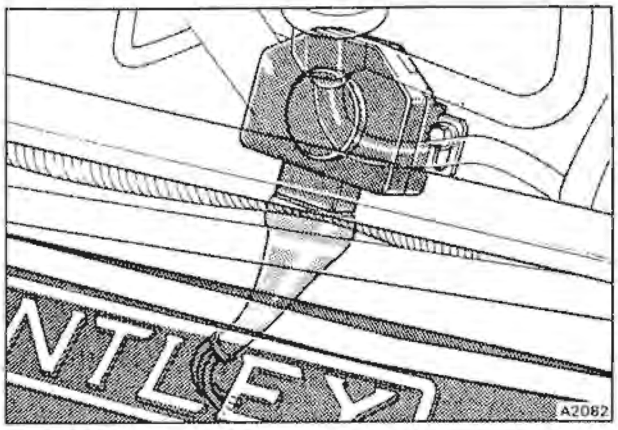

Fig. B4-15 Throttle position switch

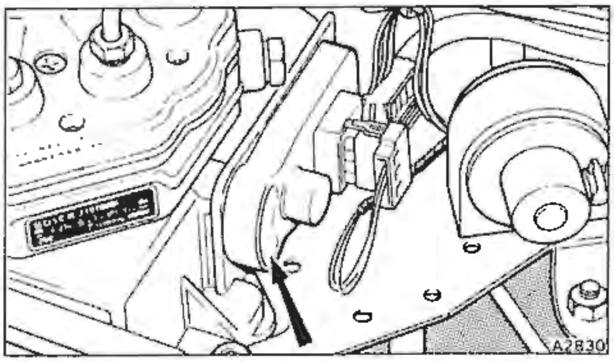

Fig. B4-16 Air flow sensor potentiometer

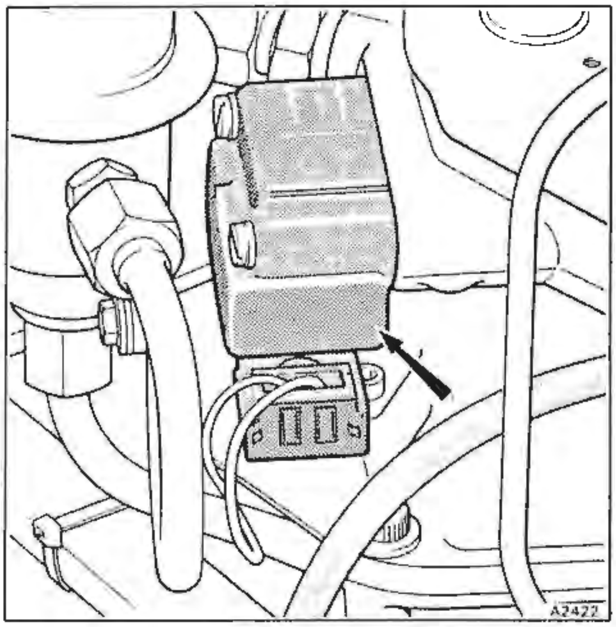

Fig. B4-17 Electro-hydraulic actuator

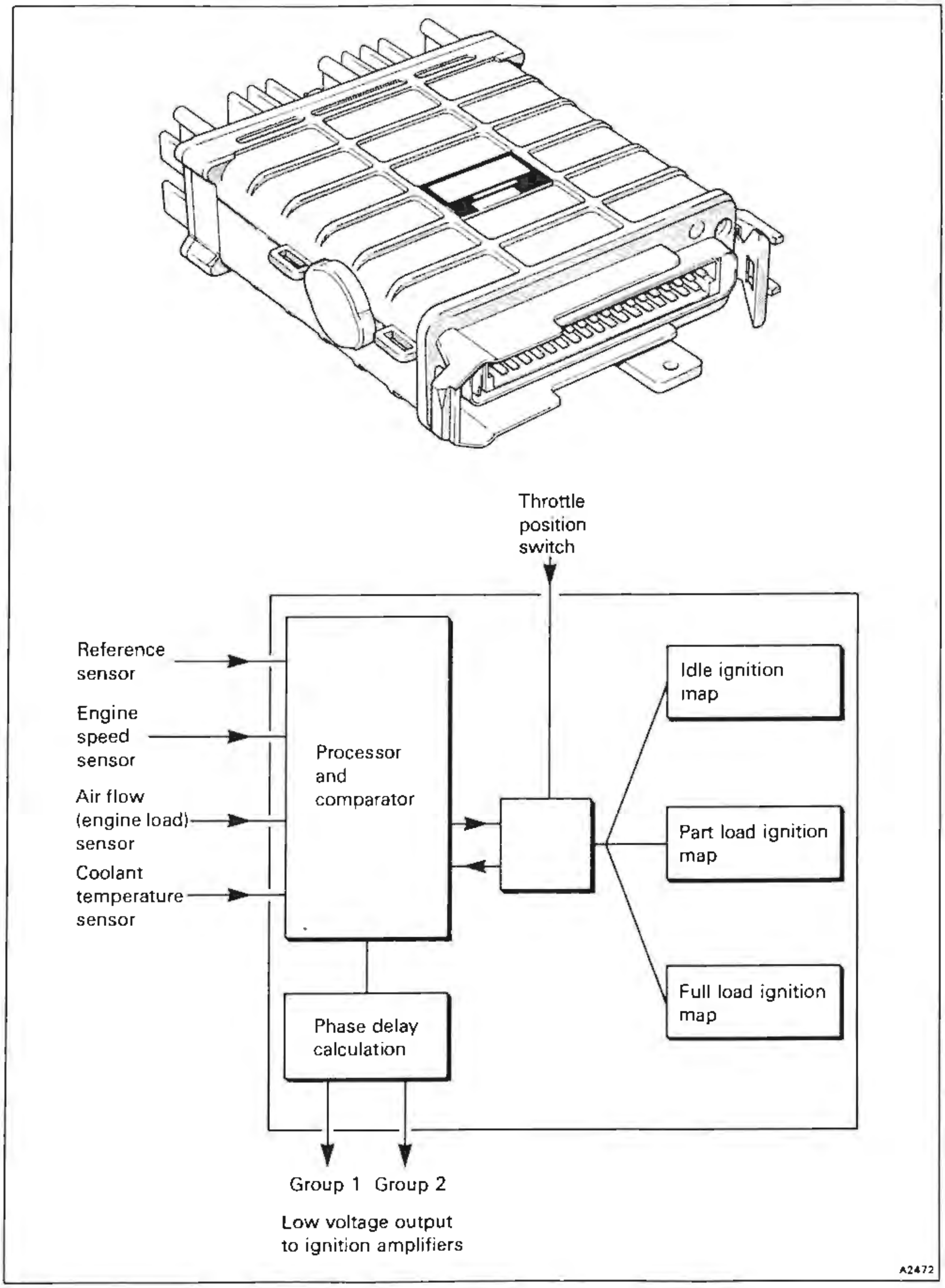

Fig. B4-18 K-Motronic ECU – Ignition timing control

Figure B4-19

K-Motronic ECU – Theoretical

K-Motronic electronic control unit

This schematic illustration shows the operational principles for the engine management system ECU controlling fuel injection (including engine starting, after-start running, engine warm-up, part-load operation and full load operation), electronic ignition, idle speed regulation, lambda control system (if fitted), and on-board fault diagnosis (if fitted).

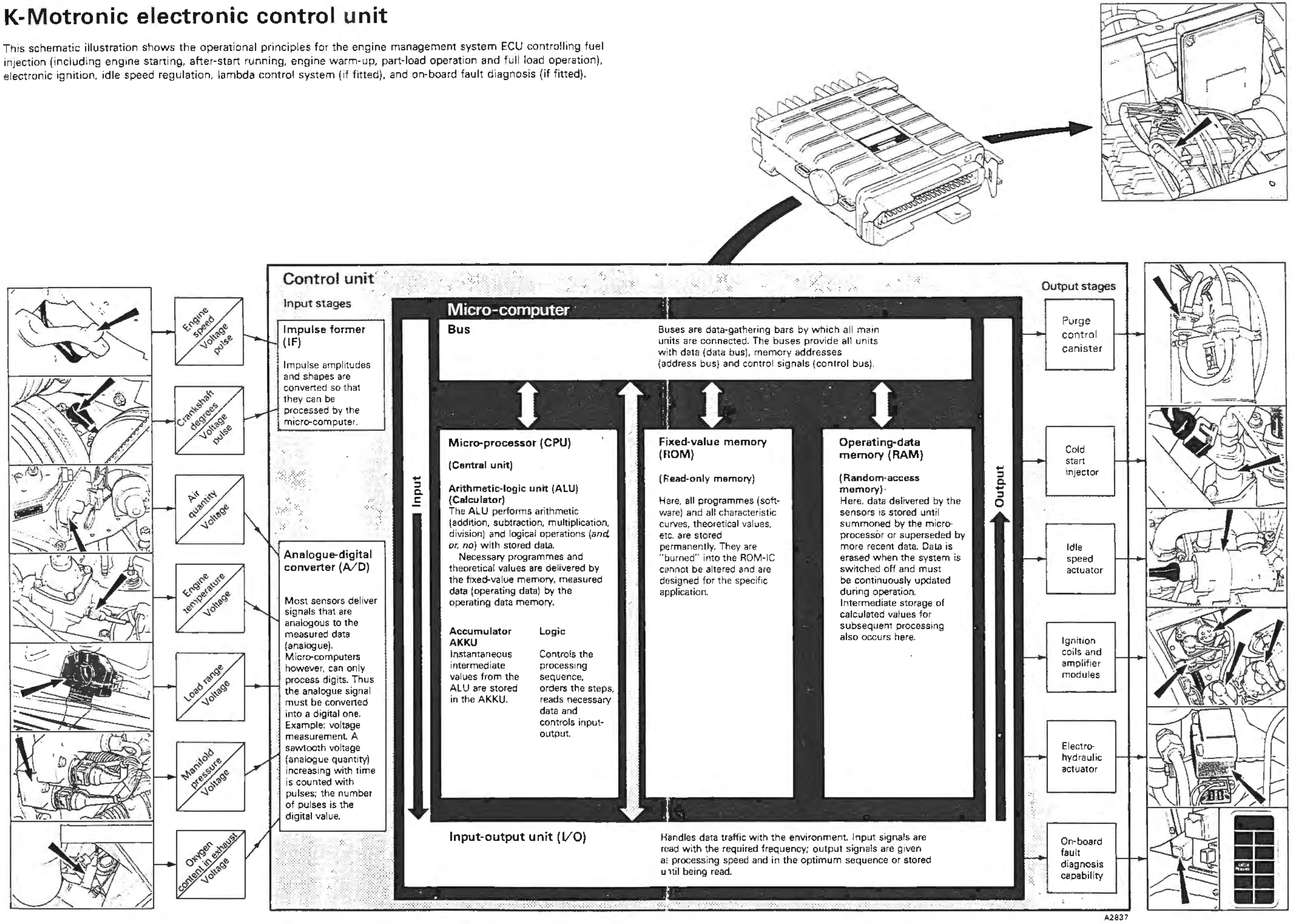

Impulse former (IF)

Impulse amplitudes and shapes are converted so that they can be processed by the micro-computer.

Analogue-digital converter (A/D)

Most sensors deliver signals that are analogous to the measured data (analogue). Micro-computers however, can only process digits. Thus the analogue signal must be converted into a digital one. Example: voltage measurement. A sawtooth voltage (analogue quantity) increasing with time is counted with pulses; the number of pulses is the digital value.

Bus

Buses are data-gathering bars by which all main units are connected. The buses provide all units with data (data bus), memory addresses (address bus) and control signals (control bus).

Micro-processor (CPU)

(Central unit)

Arithmetic-logic unit (ALU) (Calculator)
The ALU performs arithmetic (addition, subtraction, multiplication, division) and logical operations (*and, or, no*) with stored data.

Necessary programmes and theoretical values are delivered by the fixed-value memory, measured data (operating data) by the operating data memory.

Accumulator AKKU
Instantaneous intermediate values from the ALU are stored in the AKKU.

Logic
Controls the processing sequence, orders the steps, reads necessary data and controls input-output.

Fixed-value memory (ROM)

(Read-only memory)

Here, all programmes (software) and all characteristic curves, theoretical values, etc. are stored permanently. They are "burned" into the ROM-IC cannot be altered and are designed for the specific application.

Operating-data memory (RAM)

(Random-access memory)
Here, data delivered by the sensors is stored until summoned by the micro-processor or superseded by more recent data. Data is erased when the system is switched off and must be continuously updated during operation. Intermediate storage of calculated values for subsequent processing also occurs here.

Input-output unit (I/O)

Handles data traffic with the environment. Input signals are read with the required frequency; output signals are given at processing speed and in the optimum sequence or stored until being read.

thin layer of platinum. In addition, a porous ceramic layer is applied to the outer side which is exposed to the exhaust gas. The surface of the hollow inner side of the ceramic tube is in contact with the ambient air.

When in position, the ceramic sensor tube is subjected to the exhaust gas on the outside, whilst ambient air is allowed to pass inside the sensing tube. If the oxygen concentration inside the sensor differs from the outside, a voltage is generated between the two boundary surfaces due to the characteristics of the material used. This voltage is a measure of the difference in the oxygen concentration inside and outside the sensor.

The ceramic sensor tube exhibits a steep change in signal output (approximately 1000 mV) when stoichiometric conditions are approached (see fig. B4-23).

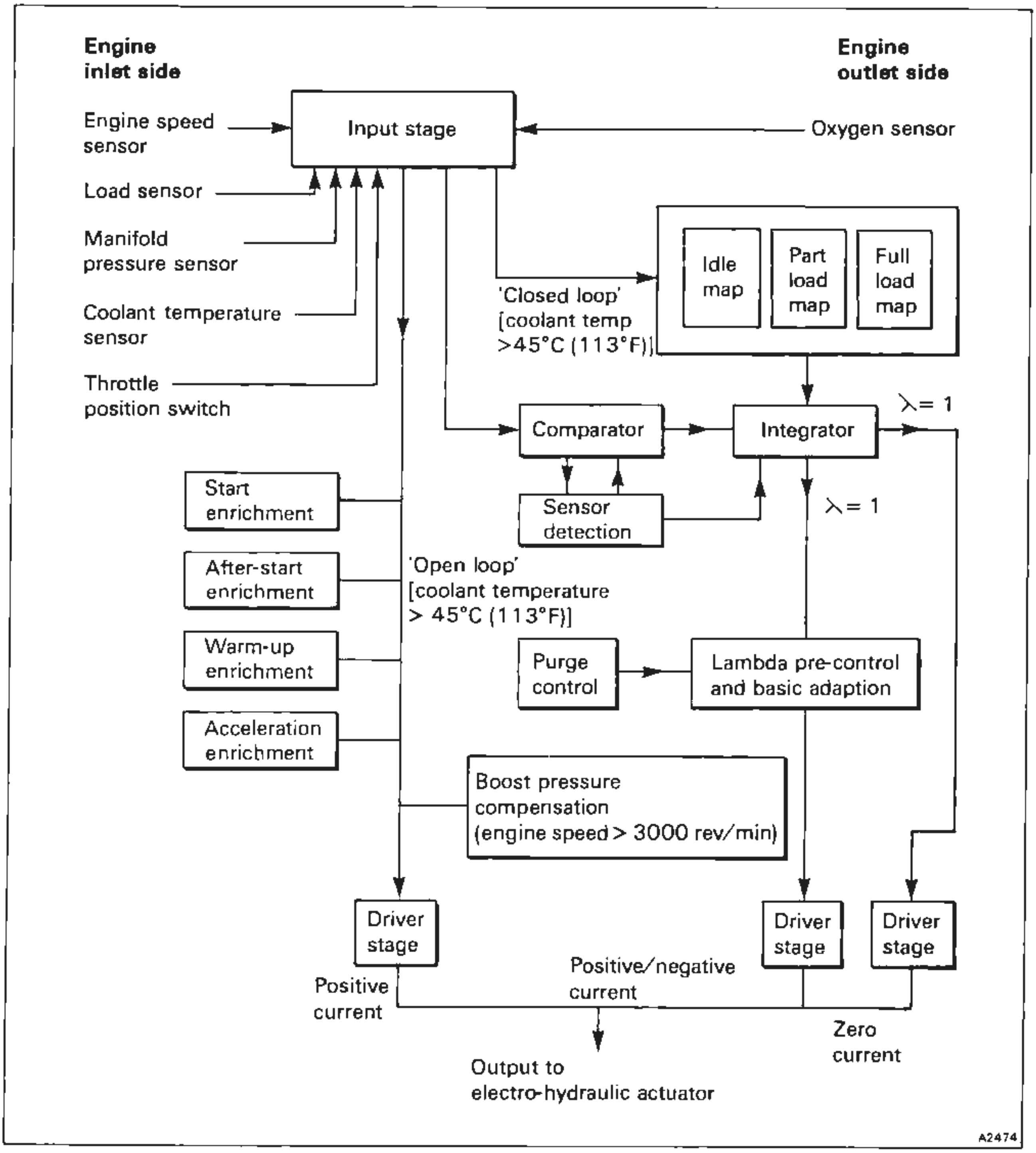

Fig. B4-20 K-Motronic ECU – Air/fuel ratio control

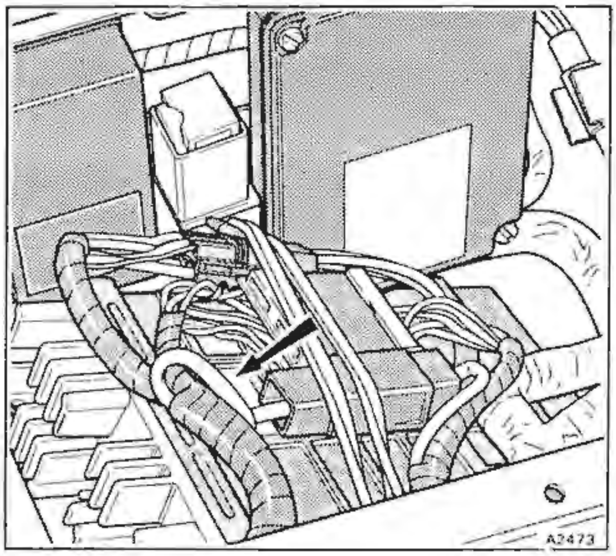

Fig. B4-21 Location of the engine management system K-Motronic ECU

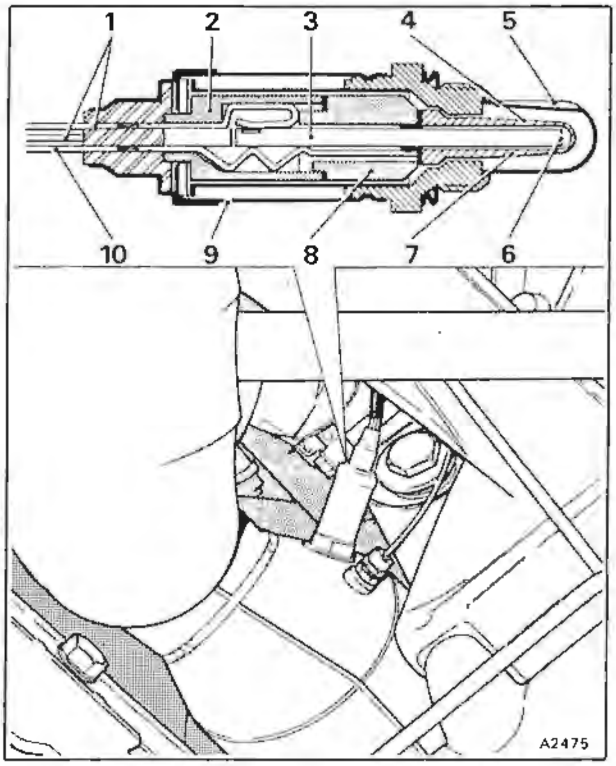

Fig. B4-22 Heated oxygen sensor

1 Two spring contacts for heater
2 Ceramic insulator
3 Heater
4 Ceramic sensor body
5 Protective tube
6 Air side
7 Exhaust gas side
8 Supporting ceramic
9 Protective sleeve
10 Contact for sensor

The oxygen sensor will only exhibit this steep change in signal output when a certain predetermined operating temperature is attained. Therefore, to reduce the oxygen sensor's dependency upon exhaust gas to maintain it at operating temperature, the sensor is heated electrically, using a ceramic heating rod fitted inside the zirconium dioxide tube.

Following engine starting, particularly from cold, it is not possible to exercise satisfactory 'closed-loop' control. During these conditions the ECU provides start, post-start, and warm-up signals until the sensor reaches its operating temperature.

The ECU continually monitors the internal resistance of the oxygen sensor. After starting a warm engine, the ECU immediately operates in the 'closed-loop' mode, if the sensor resistance is less than a specified threshold resistance.

If, during normal engine operation, the sensor resistance does not oscillate about a check threshold within a specified time period the ECU switches to open loop mode. The output to the EHA is zero and fuelling is controlled mechanically by the mixture control unit. The 'CHECK ENGINE' warning lamp will also illuminate.

Idle speed actuator (see fig. B4-24)
The idle speed actuator contains a rotary magnetic drive, the armature of which is connected to a rotating slide. This adjusts the cross sectional area of the by-pass passage. The duty cycle from the ECU produces a torque at the rotating armature which acts against a return spring.

The by-pass passage is adjusted to maintain the correct engine idle speed of 580±20 rev/min under all normal operating conditions.

Output from the ECU to the idle speed actuator is dependent upon the engine coolant temperature such that a smooth idle quality can be achieved after starting at low ambient temperatures. To compensate for high frictional loads and warm-up functions, the ECU is programmed to allow a slightly higher than normal idle speed.

Engine speed sensor (see fig. B4-25)
The sensor is fitted into the cover below the timing wheel. It is retained in position by a bracket which extends from the left-hand rear engine mount. The signal generated by the rotation of the four segment timing wheel is received by the engine speed sensor and conveyed to the K-Motronic ECU for calculation of the engine speed.

Four segment timing wheel (see fig. B4-26)
The timing wheel is attached to the rear of the crankshaft. It has four equal length segments around its periphery, separated by four gaps. The gaps are also of equal length but each one is longer than the segments.

During each revolution of the crankshaft the timing wheel sensor fitted at the rear of the engine, detects four segment and gap combinations. This

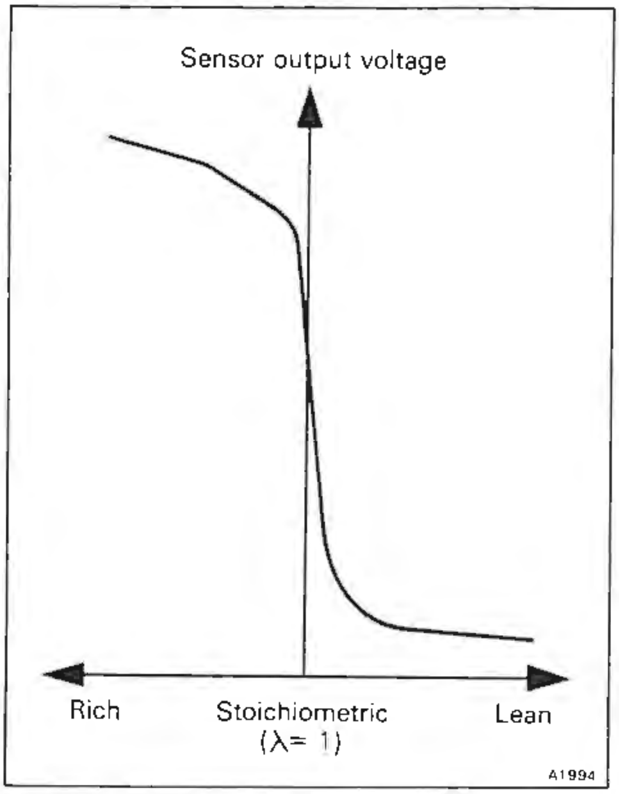

Fig. B4-23 Typical sensor output signal

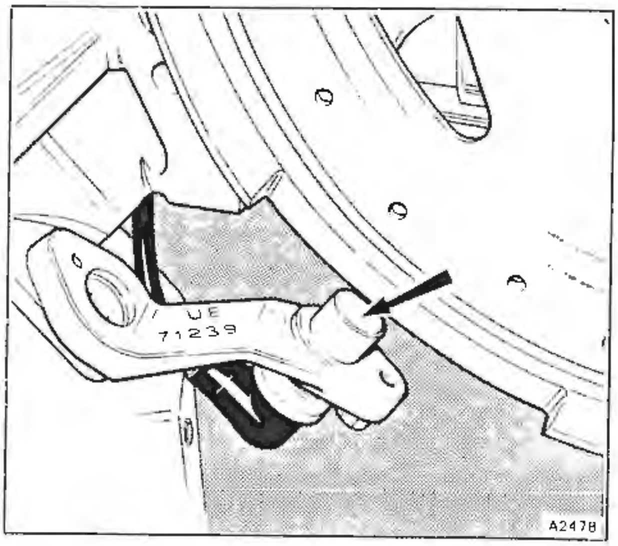

Fig. B4-25 Engine speed sensor

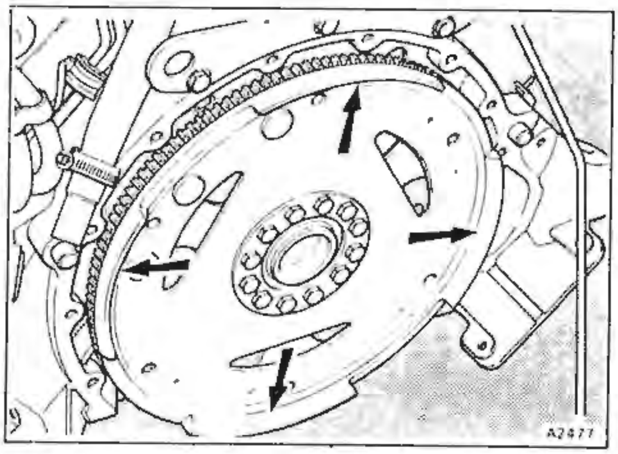

Fig. B4-26 Four segment timing wheel

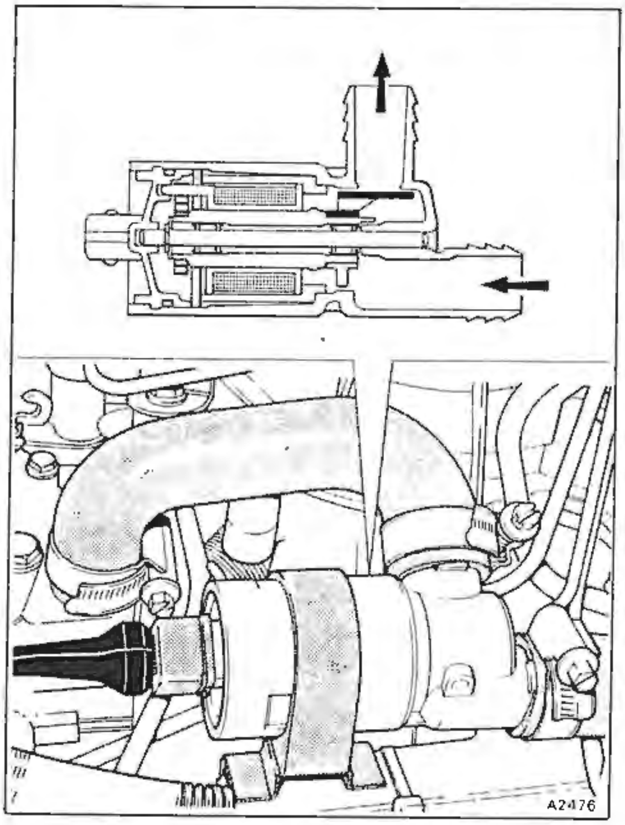

Fig. B4-24 Idle speed actuator

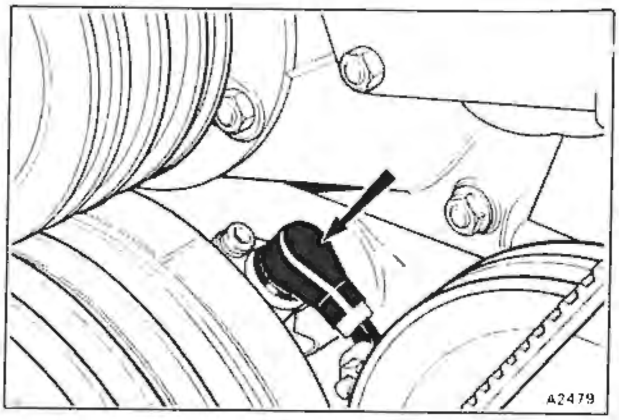

Fig. B4-27 Crankshaft reference sensor

ratio signal is transmitted by the sensor to the K-Motronic ECU for engine speed calculations.

Crankshaft reference sensor (see fig. B4-27)
Initiation of A1 ignition and subsequent engine firing order occurs when the front damper mounted reference pin passes the crankshaft reference sensor, situated at the front of the engine.

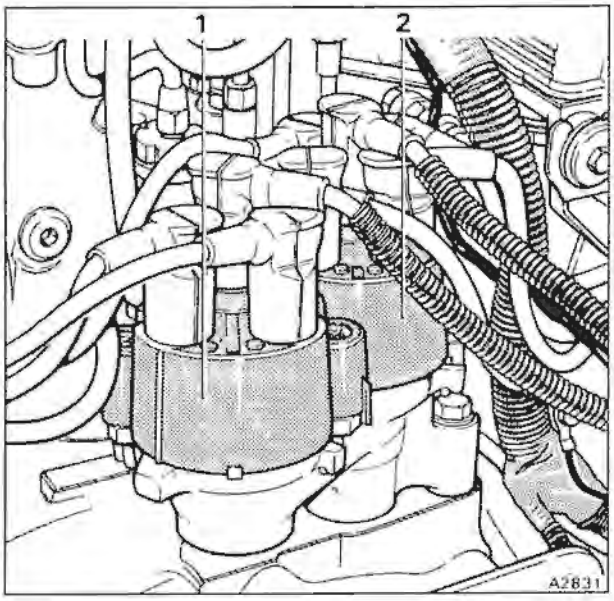

Fig. B4-28 Ignition distributor assembly
1 Group 1
2 Group 2

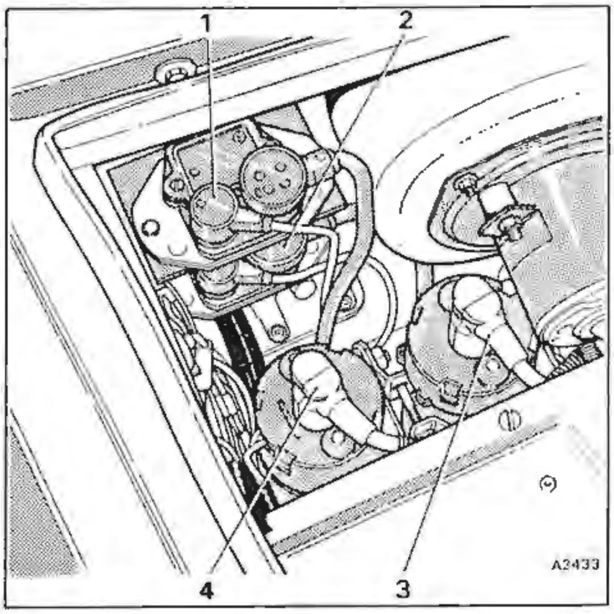

Fig. B4-29 Ignition coils and amplifier modules
1 Group 1 ignition amplifier
2 Group 2 ignition amplifier
3 Group 1 ignition coil
4 Group 2 ignition coil

Ignition distributor assembly (see fig. B4-28)
The tandem distributor assembly is mounted at the rear of the engine. It is driven via a gear wheel from the rear of the camshaft.

The assembly consists of two four pole ignition distributor caps connected by a toothed drive belt. A rotor arm in each cap distributes the high tension from the ignition coils to the sparking plugs in accordance with the firing order A1, A3, B3, A2, B2, B1, A4, B4.

Ignition amplifier modules (see fig. B4-29)
The two amplifier modules (group 1 and group 2) are located adjacent to the bulkhead on the right-hand side of the engine compartment.

The amplifiers (driver stages) provide the first stage amplification of the low tension signals from the K-Motronic ECU to the ignition coils.

Ignition coils (see fig. B4-29)
The two ignition coils (group 1 and group 2) are located adjacent to the bulkhead on the right-hand side of the engine compartment.

When the low tension to the primary winding is interrupted by its amplifier, high tension is induced in the coil secondary winding. This high tension is then passed to the ignition distributor.

Electronic components
The theoretical wiring diagram shown in figure B4-30, provides basic details of the electrical components within the digital fuel injection and ignition control systems.

Modes of operation

The K-Motronic engine management system combines both the KE3 - Jetronic digital fuel injection system and the EZ 58F digital ignition system into one common electronic control unit (ECU).

External pin parameter coding enables the use of a common K-Motronic ECU for all turbocharged cars, regardless of whether or not they are fitted with catalytic converters.

Stand current (pre-cranking)
Minimum engine speed to detect engine cranking is 30 rev/min. Hence, with the ignition on and an engine cranking speed of less than 30 rev/min, the EHA is energized with a stand current of 100 ± 2mA.

There is an audible buzz as both the pre and main fuel pumps energize for approximately one second when the ignition is switched on. This ensures immediate fuel system charging and a pressurized fuel feed at the fuel distributor inlet, to assist engine starting.

It is important to note that the mixture control unit air flow sensor plate should not be deflected, otherwise fuel will be sprayed into the cylinder head induction passages.

Stand current will remain constant whilst the ignition is switched on.

Figure B4-30

Theoretical wiring diagram

Printed in England

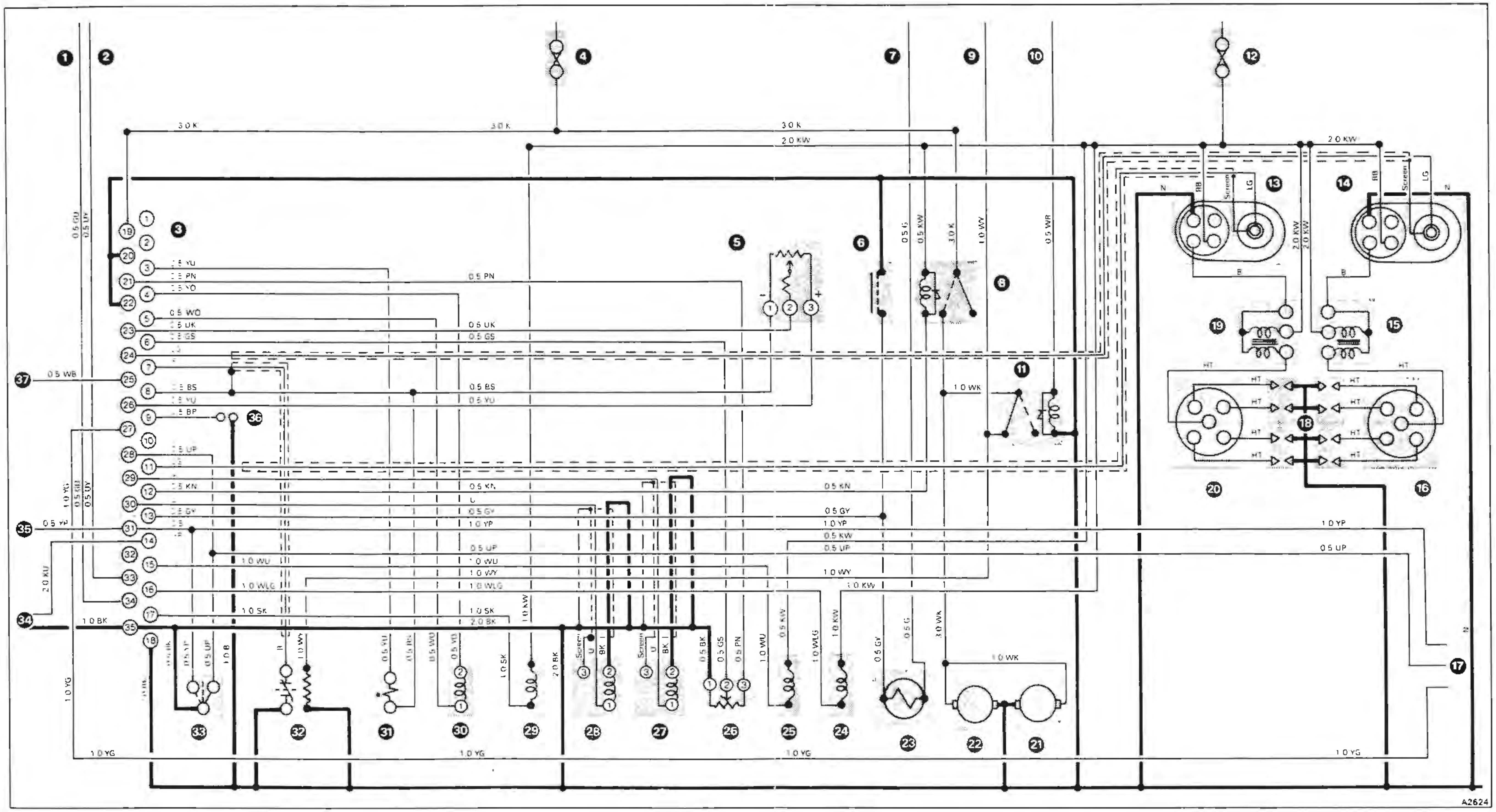

Fig. B4-30 Theoretical wiring diagram

1 Speed control ECU
2 ACU thermostat
3 K-Motronic ECU
4 Fuse B5, Fuseboard 2, 20 amp
5 Air flow sensor potentiometer
6 Diagnostic button (if fitted)
7 Warning lamps fuse
8 Fuel pump relay
9 ACU circuit relay
10 Starter relay
11 ACU control relay
12 Fuse B3, Fuseboard 1, 15 amp
13 Ignition driver module 1
14 Ignition driver module 2
15 Ignition coil 2
16 Ignition distributor 2
17 Digital EGR ECU
18 Sparking plugs
19 Ignition coil 1
20 Ignition distributor 1
21 Fuel pre-pump
22 Main fuel pump
23 Check engine warning lamp (if fitted)
24 Cold start injector
25 Canister purge duty cycle valve (if fitted)
26 Air pressure transducer
27 Reference sensor – timing (front)
28 Speed sensor (rear)
29 Idle speed actuator
30 Electro-hydraulic actuator
31 Coolant temperature sensor
32 Oxygen sensor and heater (if fitted)
33 Throttle position switch
34 Overvoltage relay
35 Kick-down relay
36 Parameter code socket (K-Motronic link required on cars not fitted with catalytic converters)
37 Air injection system ECU

Engine coolant temperature	Stand current (mA)			After start enrichment (mA)		Warm-up enrichment (mA)	
Specification	A	B		A	B	A	B
60°C (140°F)	100	100	Start enrichment current of 20 mA to be added to the 'after start' enrichment values as follows. When cranking until (a) the engine speed exceeds 430 rev/min (b) a period of 1 second is exceeded with closed throttles. (c) a period of 2.6 seconds is exceeded with opened throttles.	0	0	0	0
40°C (104°F)	100	100		2	3	0	1
20°C (69.8°F)	100	100		12	12	5	5
16°C (60.8°F)	100	100		24	24	16	16
0°C (32°F)	100	100		44	44	30	30
−16°C (3.2°F)	100	100		61	61	38	38
−26°C (−14.8°F)	100	100		99	99	64	64

Ignition on feature

Nominal mA characteristics are highlighted in the above table and a tolerance band is not specified. Under most field/service conditions precise engine coolant temperatures will not be measured, hence starting and warm-up characteristics will be calculated from interpolated values. Stand current is an 'ignition on' feature and has a tolerance of 100±2mA.

Identification of enrichment factors should form the basis of fault diagnosis for engine starting and warm-up difficulties.

Specification A – Cars fitted with catalytic converters **Specification B** – Cars without catalytic converters

A2874

Fig. B4-31 Enrichment factors (excluding acceleration enrichment)

Start enrichment

Start enrichment which is additional to 'after start' enrichment, is present during cranking and continues until the engine speed exceeds 430 rev/min. It consists of two basic modes.

a. With throttle plates closed.

b. With throttle plates open.

Time constants for modes a and b are 1.0 second and 2.6 seconds respectively.

The total starting enrichment consists of one fixed and two variable factors as follows.

1. Initial start enrichment current element fixed at

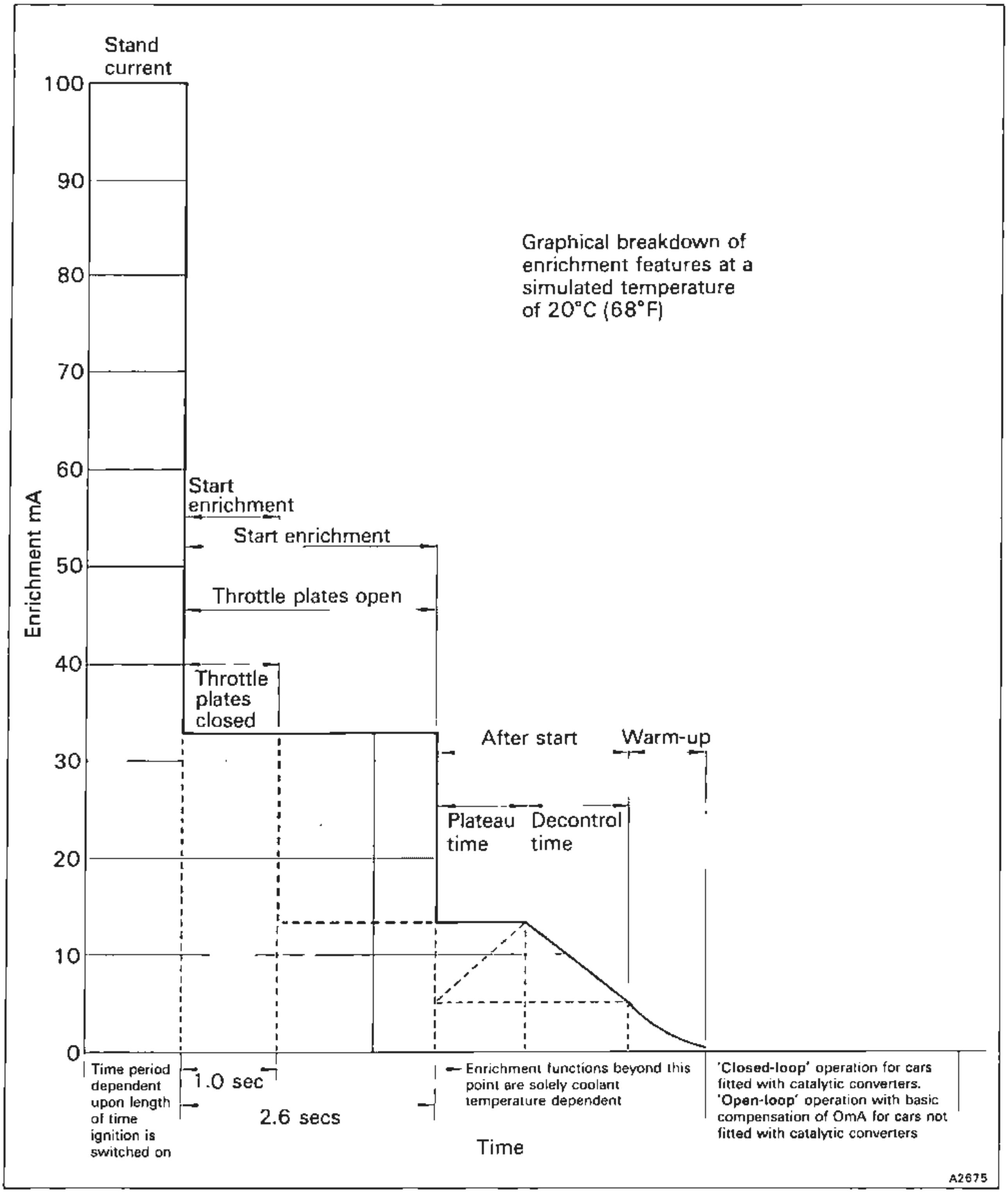

Fig. B4-32 Cold start, after start, and warm-up features

20 mA (which is added to the 'after start' enrichment) for either 1.0 or 2.6 seconds.

2. 'After start' enrichment - variable and dependent upon coolant temperature.

3. Warm-up enrichment - variable and dependent upon coolant temperature.

Figures B4-31 and B4-32 show details of the enrichment factors.

'After start' enrichment

When the engine speed exceeds 430 rev/min the K-Motronic engine management system proceeds into its 'after start' enrichment mode. This ensures smooth engine running during the initial fuel injector stabilization period. 'After start' enrichment can be further sub-divided into two basic elements, the magnitude and duration of which are solely dependent upon engine coolant temperature.

a. Plateau time

b. Decontrol time

Figures B4-31 and B4-32 show details of the enrichment factors.

Warm-up enrichment

This gradual decay of enrichment factor commences upon completion of 'after start' enrichment. Engine coolant temperatures at which warm-up enrichment finishes differ for cars with or without catalytic converters.

The engine coolant temperature at which cars fitted with catalytic converters revert to 'closed loop' operation is 40°C (104°F).

Figures B4-31 and B4-32 show details of the enrichment factors.

Cold start injection operation

The cold start injector has three basic modes of operation which are as follows.

1. Conventional cold start injector operation

Digital control enables precise cold start injector operation for all ambient temperatures. Engine coolant temperature is the most accurate method of determining the additional increase in mixture strength required from single point injection during cold starting (i.e. the cold start injector). Hence cold start injector operation is controlled by the K-Motronic ECU via inputs from the engine coolant temperature sensor.

Rates of cold start injection are preset and dependent upon four engine coolant temperature sites. Values of coolant temperature experienced in service between the four sites are calculated by direct interpolation. Coolant temperatures beyond site four −26°C (−14.8°F) which is shown as the last site, are

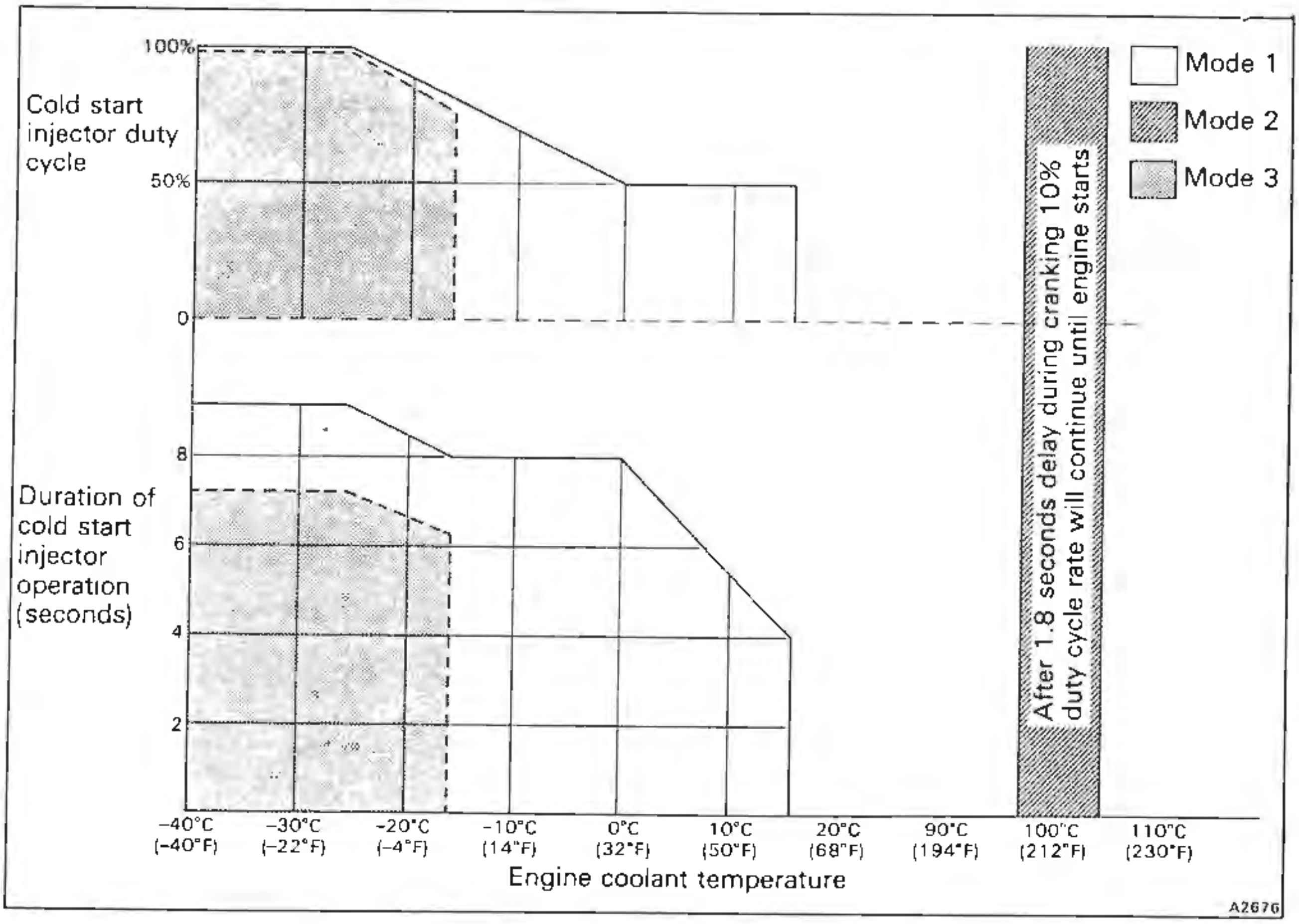

Fig. B4-33 Cold start injector operation extrapolated at the −26°C (−14.8°F) site value.

Duty cycle control of the cold start injector voltage supply provides additional flexibility, matching cold start injection much closer to engine starting requirements.

Coolant temperature sites	Duration of cold start injector operation	Duty cycle
16°C (60.8°F)	4 seconds	50%
0°C (32°F)	8 seconds	50%
−16°C (3.2°F)	8 seconds	80%
−26°C (−14.8°F)	9 seconds	100%

Note For this mode of operation the cold start injector only functions whilst the engine is cranking

2. Cold start injector function for 'hot' engine starting
When the engine coolant temperature approaches 100°C (212°F) and an engine cranking period exceeds 1.8 seconds, the cold start injector is energized and provides fuel injection into the induction manifold at a 10% duty cycle rate. This fuel flow supplements fuel from the main injectors resulting from air sensor plate deflection.

This feature provides hot engine starting assistance during adverse operating conditions.

3. 'After start' cold start injector operation
At engine coolant temperatures below −16°C (3.2°F) further 'after start' assistance is provided by the cold start injector. Time periods and cold start injector duty cycles are preset within the K-Motronic ECU and commence at the same time as the 'after start' enrichment period provided by the EHA.

Figure B4-33 provides graphic operational details.

Coolant temperature	Duration of cold start injector operation (during 'after start' assistance only)	Duty cycle
−16°C (3.2°F)	6 seconds	75%
−26°C (−14.8°F)	7 seconds	100%

Acceleration enrichment
Acceleration enrichment is present when specific K-Motronic engine management trigger thresholds are exceeded, these are dependent upon the rate of air sensor plate deflection. Once the threshold rate of air sensor plate movement has been reached, an increase in mA corresponding to acceleration enrichment reaches its peak value (dependent upon engine coolant temperature) and fades away within one second.

Due to the fast response time, accurate in-vehicle measurements will not be possible under service conditions. Therefore, the following information should be used as approximate guidelines.

It is however, sufficient to say that failure of the acceleration enrichment system can be detected by either unacceptable flat spots during the engine warm-up phase (cars fitted with catalytic converters) or poor acceleration response (cars not fitted with catalytic converters).

An instant functional check can be achieved by 'blipping' the throttle with the vehicle stationary. This should result in corresponding pulses in mA readings over the following range of engine coolant temperatures.

On cars fitted with catalytic converters, acceleration enrichment commences at an engine coolant temperature of 16°C (3.2°F), coolant temperatures below this result in higher levels of acceleration enrichment.

On cars not fitted with catalytic converters, a small amount of acceleration enrichment is present at engine coolant temperatures above 60°C (140°F).

Below this value acceleration enrichment factors increase with decreasing engine coolant temperatures in a similar manner on all cars.

Effect of engine coolant temperature on the digital ignition system
During the engine warm-up phase improved combustion efficiency is achieved with additional ignition advance. Refer to the ignition control system section for details.

Fuel injection system - Workshop servicing information

Health risks

Refer to Section A3, General information for health risk details relating to fuel and engine oils.

Workshop safety precautions

Refer to Section A3, General information for this information.

Additional information when working on the KE3 - Jetronic system

1. Do not start the engine unless the battery connections are securely fastened.
2. Do not disconnect the battery from the vehicle electrical system when the engine is running.
3. Do not charge the battery whilst it is installed in the vehicle.
4. Always remove the K-Motronic ECU before carrying out any electrical welding work.
5. Always ensure that all wiring harness plugs are securely connected.
6. Do not disconnect or connect the wiring harness 35 way multiple plug of the K-Motronic ECU with the ignition switched on.
7. If repeated or extended engine cranking periods are required for a particular engine/vehicle diagnosis, the electrical plug should be disconnected from the cold start injector.

Fuel pressure
The fuel injection system contains fuel that may be pressurized to 6,3 bar (91.3 lbf/in²). Therefore, to reduce

Symptom

Possible cause	Engine fails to start or starts with difficulty when cold	Engine fails to start or starts with difficulty when hot	Uneven idle quality during the warm-up phase	Poor throttle response	Engine misfires during high speed/load operation	Unsatisfactory engine performance (is 'boost' restricted to 'base pressure characteristic' complete control system functional check)	Engine runs on	Fuel consumption too high	Flat spot during acceleration	Idle CO concentration too high	Idle CO concentration too low	Idle speed outside limits	Engine starts then immediately cuts out	Refer to workshop procedure
Fuel pump and/or pre-pump not operating correctly	●	●			●	●								1
Induction system leaking		●	●	●					●		●			2
Air flow sensor lever/control piston seizure	●	●	●	●			●		●	●	●			3
Incorrect position of air flow sensor plate	●	●					●							4
Incorrect operation of idle speed actuator or poor throttle plate seating	●	●	●									●	●	5
Faulty cold/hot start system	●	●												6
Cold start injector leaking			●				●			●			●	7
Incorrect primary fuel pressure	●	●	●		●	●		●	●	●	●			8
Incorrect differential fuel pressure	●	●	●		●	●		●	●	●	●		●	9
Leaks in fuel system	●	●												10
Faulty injectors		●	●				●	●		●			●	11
Unequal fuel delivery from distributor			●		●	●		●					●	12
Throttle plates not opening correctly						●			●					13
Fuel accumulator diaphragm burst	●	●			●	●								14
Blocked air filter or ducting	●	●	●	●		●								15
Incorrect 'starting enrichment' function	●	●												Refer to the fuel injection system electrical test programme (refer to fig. B4-35)
Incorrect 'post start enrichment' function			●										●	
Incorrect 'warm-up enrichment' function	●		●	●						●			●	
Incorrect 'acceleration enrichment' function				●					●					
Incorrect 'full-load enrichment' function					●	●			●					
Incorrect induction manifold pressure correction					●	●			●					
Incorrect electrical connections at EHA	●	●											●	
Faulty engine coolant temperature sensor	●	●	●	●				●	●	●			●	
Faulty air pressure transducer			●		●	●			●	●				

A2653

Fig. B4-34 Basic KE3-Jetronic fault diagnosis chart the risk of possible injury and fire, always ensure that the system is depressurized using the following method, before commencing any work that will entail opening the system.

1. Clean the inlet connection to the fuel filter.
2. Wrap an absorbent cloth around the joint.
3. Carefully slacken the pipe nut to release any pressurized fuel from the system.
4. Tighten the pipe nut.
5. Discard the absorbent cloth in accordance with health and safety regulations.

Exhaust gases

When running turbocharged engines for prolonged periods within enclosed working areas, always ensure that the exhaust gases are removed safely.

Whilst direct exhaust gas ventilation is available in some workshop areas, it is inevitable that extraction hoses will have to be used in certain circumstances, particularly when the vehicle is 'ramp bound'. In these specific instances, the large flexible exhaust adapter shrouds must be fitted to prevent a high level of depression being applied to the exhaust turbine seal in the turbocharger.

Under no circumstances should high depression exhaust gas extraction units be applied directly to the tailpipes.

Fault diagnosis

This fault diagnosis section includes.

Basic system test procedures
Electrical and electronic components fault diagnosis
Mechanical components fault diagnosis
'On-board' fault diagnosis coding (cars fitted with catalytic converters).

It is important that fault finding is carried out in the sequence given to prevent incorrect diagnosis which could result in both lengthy and costly repairs.

Often, a mechanical fault has sufficiently well defined symptoms to enable a very rapid diagnosis to be made.

The **basic fault finding procedure** is as follows, noting that any faults found in one system should be rectified before moving onto the next stage of the procedure.

1. Check the integrity of all hose and electrical connections. Tighten where necessary.
2. Check the condition of the sparking plugs.
3. Carry out a compression test on the engine cylinders. Inhibit the operation of the fuel injection and ignition systems during this test by removing the respective fuses.
4. Start the engine.

On cars fitted with catalytic converters, turn the ignition key from the LOCK to the RUN position and observe that the 'Check Engine' warning panel is illuminated. Continue to turn the key to start the engine. As the engine starts check that the warning lamp extinguishes. If the lamp remains illuminated, refer to the 'on-board' diagnostic listing (see fig. B4-36).

5. Ensure that the engine is running on all eight cylinders.
6. Allow the engine to fully warm-up, whilst noting the following.

a. Check the fuel injection system for leaks.
b. Check that the vacuum system hoses and pressure pipes are free from leaks.
c. Check that the crankcase emission control system hoses are free from leaks.
d. Check the entire induction system for audible air leaks, paying particular attention to components downstream of the air flow sensor plate.

This is particularly important on cars fitted with catalytic converters, in view of the systems ability to learn and provide limited air leak compensation.

7. Ensure that the idle CO is correct by checking the idle mixture strength.
8. Ensure that the idle speed actuator stabilizes the engine idle speed at 580 ± 20 rev/min regardless of load.
9. Carry out basic engine management system checks to ensure that the fuel injection and ignition control systems are functioning correctly.

During manufacture, components of the fuel injection system are precisely adjusted in order to comply with the relevant emission control regulations. Therefore, alterations to any of the settings should not normally be necessary.

Before commencing any fault diagnosis or work on the fuel injection system, ensure that the workshop safety precautions are fully understood.

Fuel injection and ignition system functional checks

The following series of functional checks are necessary to ensure the correct definition of the ignition and fuel systems 'maps'.

Always use a good quality digital multi-meter to carry out the tests.

Note The checks must be carried out with the engine stabilized at its normal operating temperature.

Throttle position switch - continuity check

1. With the engine switched off, disconnect the four way electrical plug to the throttle position switch (see fig. B4-37).
2. Always ensure that movement of the throttles is controlled by the accelerator pedal for these tests.

Idle

3. Using the multi-meter, carry out a continuity test across the black/pink and blue/purple cables from the switch as follows.
4. With the throttles closed the multi-meter buzzer should sound.
5. With the throttles fully open the buzzer should not sound.
6. The switching point should be just off the idle position and confirmed by an audible click.

Full load

7. Using the multi-meter, carry out a continuity test across the black/pink and yellow/purple cables from the switch as follows.
8. With the throttles closed the multi-meter buzzer

Figure B4-35

Fuel injection system – electrical test programme – fault diagnosis chart

Sheet 1 of 2

Printed in England

Bosch KE3-Jetronic fuel injection system electrical test programme

Electro-hydraulic actuator (EHA) – measuring internal resistance
Remove the multiple plug from the K-Motronic ECU. Measure the resistance between pins 4 and 5 (yellow/orange and white/orange). The reading should be between 18 and 22 ohms.
Is the reading within specification?

NO

Test for continuity or an earth fault in the cables from pins 4 and 5 in the loom socket to the EHA 2 pin plug. If the wiring is found to be satisfactory, the EHA is faulty.

YES

Coolant temperature sensor – measuring internal resistance
Remove the multiple plug from the K-Motronic ECU. Measure the resistance between pins 3 and 8 (yellow/blue and black/slate).
See illustration A for the correct reading.
Is the reading within specification?

NO

If the resistance measured is 'infinity' test for an open circuit in the cables from pins 3 and 8. If zero ohms, check for a short circuit across the coolant temperature sensor. If the resistance measured is outside the specification given in illustration A, the coolant temperature sensor is faulty.
Note If the 2 way connector to the coolant temperature sensor becomes either disconnected or short circuit the 'Check Engine' warning panel on the facia will illuminate and the K-Motronic engine management system will resort to its limp home mode(see blink codings).

YES

Operation of the throttle position switch – Idle mode
Remove the multiple plug from the K-Motronic ECU. Carry out a continuity test between pins 28 and 35 (black/purple and black/pink).

Throttle plates closed - buzzer is audible
Throttle plates open - buzzer stops (switching point just off the idle position and identified by an audible 'click').
Are the readings within specification?

NO

YES

Operation of the throttle position switch – Full throttle mode
Remove the kick-down relay (to prevent feed back). Remove the multiple plug from the K-Motronic ECU. Carry out a continuity test between pins 31 and 35 (yellow/purple and black/pink).

Throttle plates closed - no buzzer
Throttle plates open - buzzer is audible (switching point at 72° throttle plate rotation no audible 'click').
Are the readings within specification?

NO

Test for continuity directly at the throttle position switch. If the switch is still outside the specification, it is faulty or or incorrectly adjusted. Also check the throttle linkage for sticking. If the switching function is satisfactory, test for an open circuit in the cables.

YES

K-Motronic ECU ignition feed
Remove the multiple plug from the K-Motronic ECU. Measure the voltage between pins 14 and 35 (pink/blue and black/pink). Briefly operate the starter motor. The reading should be between 8 and 15 volts.
Is the reading within specification?

NO

Trace the pink/blue cable back from pin 14 in the K-Motronic ECU plug and check for an open circuit.
Check the over voltage relay for correct functioning. Check for fuse integrity.

YES

K-Motronic ECU permanent voltage feed
Remove the multiple plug from the K-Motronic ECU. Measure the voltage between pins 19 and 35 (pink and black/pink) as follows.
Ignition off – 12 to 15 volts
Ignition on – 12 to 15 volts
Cranking – 8 to 15 volts
Are the readings within specification?

NO

Trace the pink cable back from pin 19 in the K-Motronic ECU plug.
Check for an open circuit [including fuse B5 on fuseboard 2 (20 amp)]. Check the vehicle isolator switch and the battery (state of charge etc.).

YES

Voltage supply for the airflow sensor potentiometer
Remove the 3 pin connector from the potentiometer. Switch on the ignition and measure the voltage across pin 1 (black/slate) and pin 3 (blue/yellow) in the connector. This should be between 4.5 and 5.0 volts.
Is the reading within specification?

NO

Switch on the ignition and test for between 4.5 and 5.0 volts directly at the K-Motronic ECU pins 8 and 26 (black/slate and yellow/blue). If the reading is now satisfactory, test for an open circuit in the cables between the potentiometer and ECU.
If the reading is still outside the specification the ECU is faulty.

YES

Using the multi-meter probes measure the voltage across pin 1 (black/slate) and pin 2 (blue/pink) with the ignition switched on. Slowly depress the airflow sensor plate. The voltage reading should progressively increase from a base line of zero volts (with increasing airflow sensor plate deflection) up to a maximum of between 4.5 and 5.0 volts.
Is the reading within specification?

NO

If the reading is outside the specification, replace the airflow sensor potentiometer

YES

Continued on sheet 2

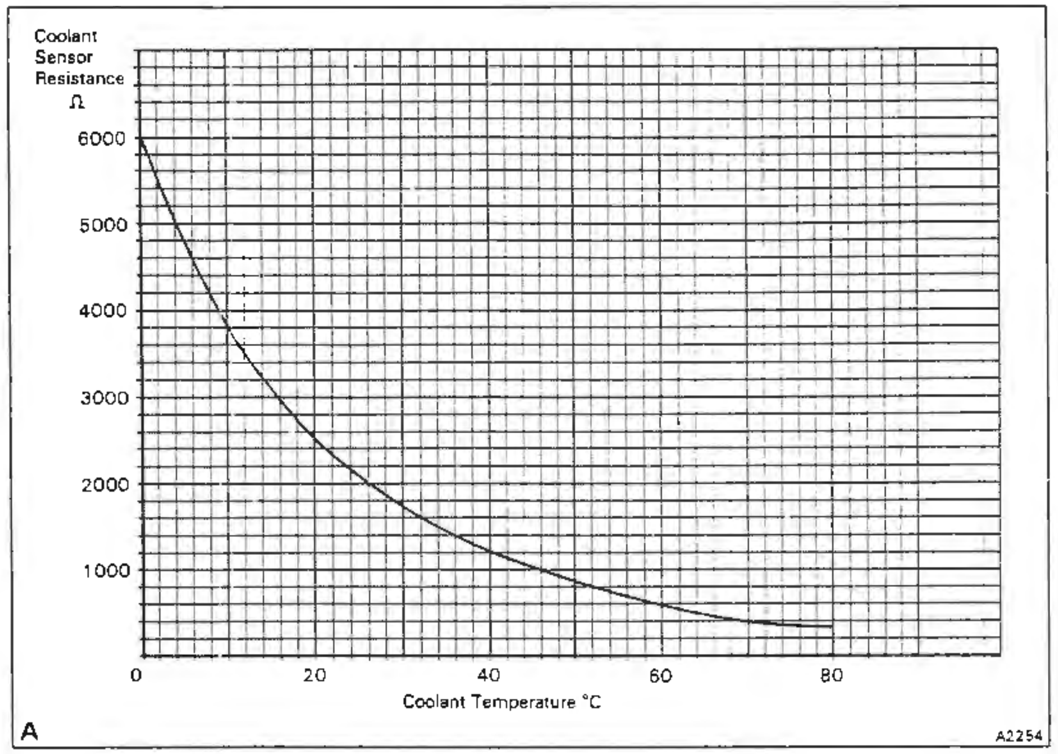

When carrying out this test programme always ensure that the following conditions apply.
1. The usual workshop safety precautions are carried out.
2. The battery is in good condition.
3. Any cables or connections disconnected for a test must be re-made before proceeding to the next operation
4. Always ensure that any faults are corrected before moving on to the next test.

Figure B4-35

Fuel injection system – electrical test programme – fault diagnosis chart

Sheet 2 of 2

Printed in England

Continued from sheet 1

Stand current
Connect a digital multi-meter in series with the EHA using the special adapter RH 9893, switch on the ignition. Note that the stand current should remain constant at 100 ± 2mA whilst the ignition is switched on. This should also result in an audible buzz as both the pre and main fuel pumps energize for approximately 1 second.
Is the reading within specification?

NO

YES

Starting, after start, and warm-up enrichment
Connect a digital multi-meter in series with the EHA using the special adapter RH 9893. Start the engine whilst observing the multi-meter reading. Consult the enrichment factors charts (fig. B4-31). Cross check the start, after start, and warm-up factors with the vehicle's coolant temperature.
Note Refer to note regarding coolant temperatures at the bottom of figure B4-31.
Are readings within specification?

NO

YES

Stabilized engine operating conditions – hot idle
With the engine running at idle speed (580 ± 20 rev/min) and an engine coolant temperature of at least 80°C (176°F), check the supply of milliamps to the EHA.
Cars not fitted with catalytic converters
Supply is fixed at a nominal value of 0mA ± 1mA.
Cars fitted with catalytic converters
Supply should oscillate about a median of 0mA with a band width of ± 3mA.
Is the reading within specification?

NO

YES

If the reading is outside the specification (and all preceding tests in the programme have been successfully carried out), the K-Motronic ECU is faulty.
If no reading is obtained, check for an open or short circuit in the leads from pins 4 and 5 (yellow/orange and white/orange) on the K-Motronic ECU to the EHA
Rectify leads and/or replace the K-Motronic ECU

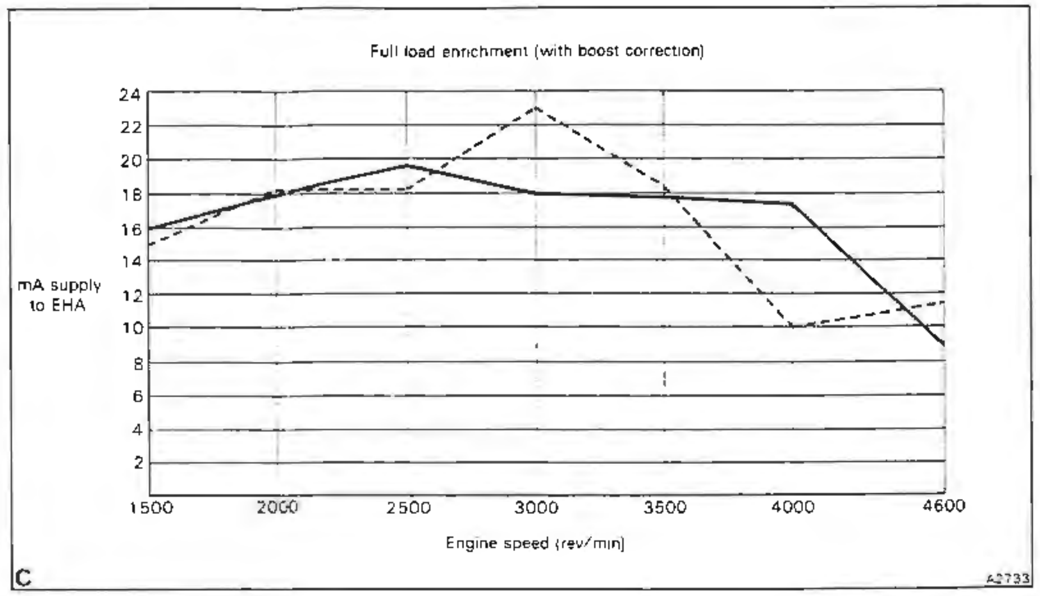

The mA values on graphs B and C are nominal and should only be used as a guideline for transient measurements.
Valid for ambient air temperatures of up to 25°C (77°F).
—— Cars fitted with catalytic converters
- - - - Cars not fitted with catalytic converters

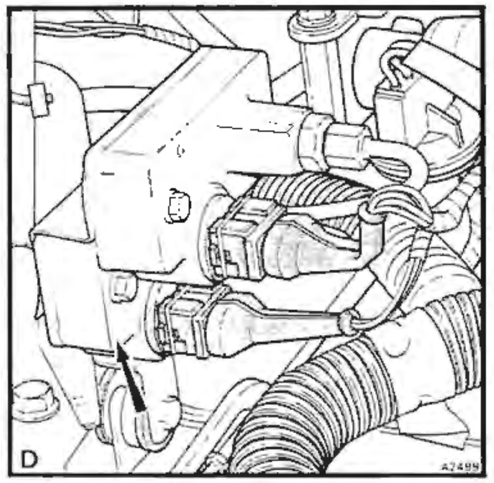

Full load enrichment (without boost correction)
Due to plausibility constraints within the K-Motronic ECU, if loss of full load enrichment is suspected it must be checked during actual vehicle operation. Fit an analogue mA meter such that the meter reading can be observed by a front seat passenger. Using extension leads and the adapter RH 9893 connect the meter in series with the EHA. Disconnect the K-Motronic air pressure transducer (APT) see illustration D. Complete a full throttle standing start acceleration and monitor the mA to the EHA, along with engine speed indicated by the vehicle tachometer. Cross check the results of the test against the appropriate full load mA map, see illustration B.
Due to the slow response of an analogue meter only consider the salient numerical points on the full load characteristic curve.
Is the range of values within specification?

NO

YES

Full load enrichment (with boost correction)
Ensure that the pipe has been re-connected to the K-Motronic air pressure transducer (APT).
Repeat the previous test. Characteristic curve should now include boost correction, see illustration C.
Is the range of values within specification?

NO

YES

Disconnect the multiple plug from the K-Motronic ECU. Check for throttle postion switch integrity, black/pink – pin 35, yellow/purple – pin 31, and blue/purple – pin 28. Also check the operation of the throttle position switch by using the accelerator pedal to operate the linkage. Ensure full load and idle map actuation.
Trace both the blue/purple and the yellow/purple leads beyond the K-Motronic engine management system for possible failure modes refer to TSD 4848.
Is a failure confirmed?

YES

NO

Check for continuity of cables from the air pressure transducer to the K-Motronic ECU (with both plugs disconnected)

APT	Cable colour	K-Motronic ECU
Pin 1	black/pink	Pin 35
Pin 2	green/slate	Pin 6
Pin 3	purple/brown	Pin 21

Are they continuous?

NO

YES

Rectify as necessary

Check the boost control system
Refer to the appropriate flow chart in Chapter D.
Does the system function correctly?

NO

YES

To complete this test programme check the idle mixture strength and the operation of the idle speed actuator. Refer to the appropriate pages of Chapter B.

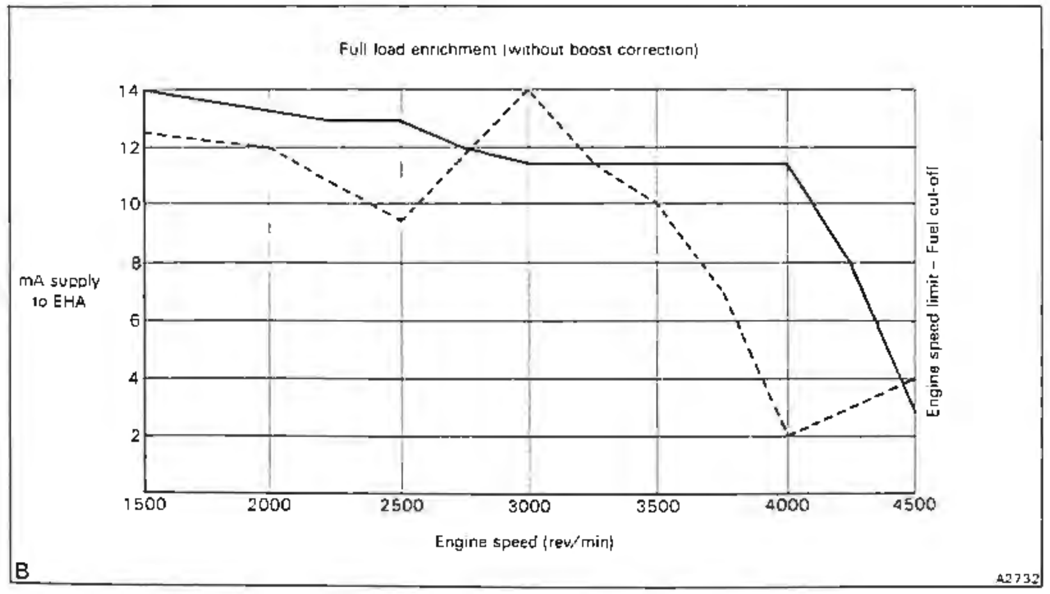

Figure B4-36

'On-board' fault diagnosis codings

Printed in England

'On-board' diagnostic check

This procedure should be followed if

a) The 'Check Engine' warning panel situated on the facia, illuminates during normal engine operation.

b) A routine 'on-board' diagnostic check is required.

Note There are four possible faults in the K-Motronic engine management system that are not externally registered by the illumination of the 'Check Engine' warning panel. These faults will however, be revealed by a blink code during an 'on-board' diagnostic check.

Procedure

Initiate an 'on-board' diagnostic check to reveal any of the listed fault codes that have been stored within the K-Motronic ECU buffer RAM (random-access memory).

1. Ensure that the usual workshop precautions are carried out.
2. Turn the ignition key to the RUN position on the switchbox, so that the 'Check Engine' warning panel illuminates (see illustration A).
3. Depress the 'on-board' diagnostic button (see illustration B) for a minimum of 4 seconds and then release.
4. Monitor the blink code on the 'Check Engine' warning panel, after the initial period of 2.5 seconds lamp on and 2.5 seconds lamp off. Refer to illustration C for an example of the initial period of 'Check Engine' warning panel operation, followed by the blink code 4.4.3.1.
5. Once a blink code has been initiated, it will keep repeating the information (with initiation periods identifying blink code commencement), until the 'on-board' diagnostic button is depressed for another 4 seconds period.

   This procedure must be repeated until all stored blink codes have been extracted from the K-Motronic ECU buffer RAM.
6. If there are no more fault codes stored, the condition is identified by the unique code 1.1.1.1. Warning panel on/off periods for this code are of 2.5 seconds duration.
7. To reset the buffer RAM following fault extraction and/or rectification, isolate the vehicle battery using the master switch located in the vehicle luggage compartment (see illustration D). To ensure complete K-Motronic ECU buffer RAM reset, the battery should be switched off for at least 4 seconds.
8. If there are no faults stored, then the blink code 4.4.4.4. will register on the 'Check Engine' facia warning panel.

Fault codes

Blink code	'Check Engine' panel illuminated	Fault description	System method of recognition	Limp home facility
2.3.1.2.	Yes	Coolant temperature sensor output outside operating range	Coolant temperatures less than –46°C (–50.8°F) or more than + 186°C (+ 366.8°F)	K-Motronic ECU provides EHA with mA compensation equivalent to + 80°C (176°F) coolant temperature for all operational modes other than starting which is set to + 20°C (68°F)
2.2.3.2.	Yes	Incorrect air flow signal	Volumetric air flow rate outside pressure upper and lower threshold limits (i.e. less than 5m³/hr or more than 1200 m³/hr)	Ignition and fuelling switched to full load map
2.1.2.1.	No	Idle switch fault. Idle control maps not recognised	Idle switch closed. Air flow greater than 166m³/hr with switch closed for more than 0.3 seconds	Ignition and fuelling switched to part load map
2.1.2.3.	Yes	Full load switch fault Full load control maps not recognised	Full load switch closed but ECU recognises part load engine operation for more than 0.3 seconds	Ignition and fuelling switched to part load map
2.1.1.3.	Yes	Engine speed sensor and/or connection to the ECU defective. Air sensor plate mechanism or fuel distributor plunger stuck	Ignition switched on, volumetric air flow rate more than 5m³hr but no engine speed signal	None
4.4.3.1.	No	Idle speed actuator connecting plug open or short circuit	End stage within K-Motronic ECU	Engine idle speed may drift from 580 ± 20 rev/min. Normal engine operation under all conditions except idle mode
2.3.4.2.	Yes	Lambda sensor and/or connection failure	End stage within K-Motronic ECU	Resort to 'open loop' engine operation
2.3.4.1.	Yes	Lambda control outside threshold limits	EHA current is less than – 14 mA or more than + 21 mA for more than 2 minutes	Once threshold limits are exceeded, further compensation/correction is not available and engine control system effectively resorts to 'open loop'.
2.3.4.3.	No	Basic idle mixture strength adjustment on mixture control unit set to its lean limit	Adaptive Lambda pre-control increases EHA current more than 10 mA	Engine management system will continue to compensate until threshold limit of + 21 mA is exceeded
2.3.4.4.	No	Basic idle mixture strength adjustment on mixture control unit set to its rich limit	Adaptive Lambda pre-control reduces EHA current more than – 5 mA	Engine management system will continue to compensate until threshold limit of – 14 mA is exceeded
4.3.1.2.	Yes	Engine reference sensor and/or its connection to the ECU defective	Synchronisation lost	Dependent upon ECU data update prior to engine reference sensor failure

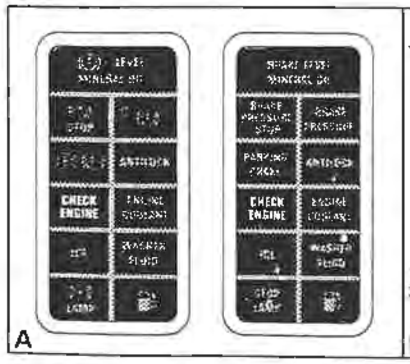

A

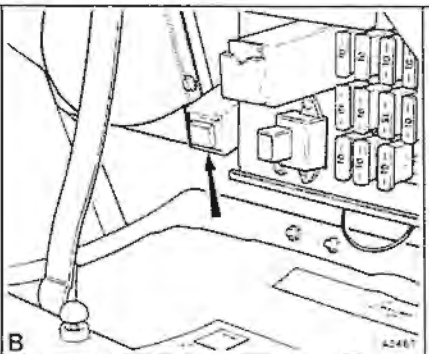

B

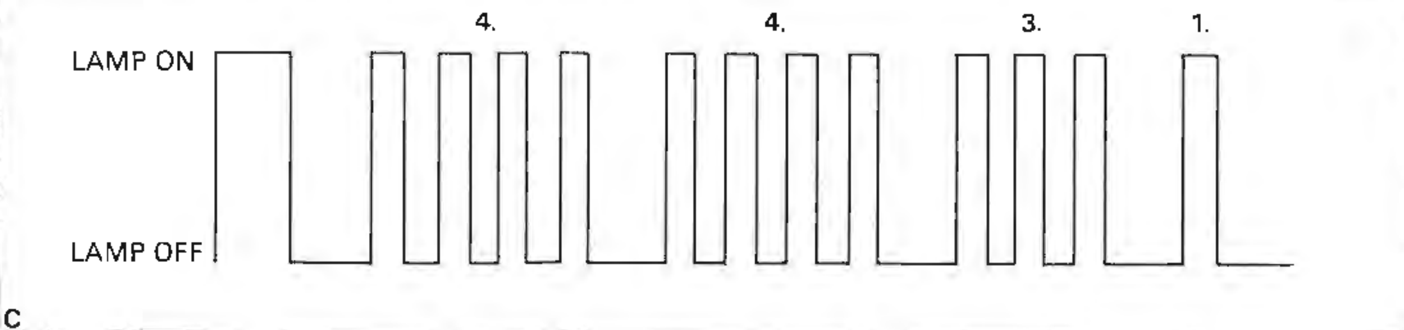

C

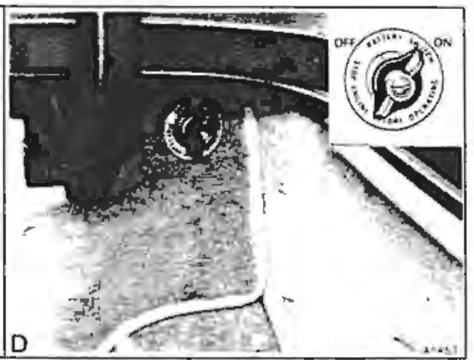

D

A2655

should not sound.

9. With the throttles fully open the mutli-meter buzzer should sound.

10. The switching point should be at approximately 72° of throttle plate rotation.

Fuel injection and ignition system maps

1. With the engine switched off, disconnect the three way electrical plug to the throttle position switch (see fig. B4-37).

2. Connect a digital multi-meter in 'series' with the electro-hydraulic actuator (EHA), using the adapter RH 9893 (see fig. B4-38).

3. Set the multi-meter to read milliamps.

Idle

4. Bridge the black/pink and the blue/purple connection on the ECU side of the throttle position switch connector (see fig. B4-37). The engine will now be governed by the 'idle map' engine management parameters.

5. Fit a stroboscope to the engine in accordance with the manufacturer's instructions.

6. Turn the ignition key from the LOCK to the RUN position and check for the K-Motronic ECU 'stand current' of 100 mA ± 2mA.

7. Start and run the engine until normal operating temperature is attained.

8. With the engine running at idle speed and the coolant temperature stabilized above 80°C (176°F), check that the ignition timing is 6° ± 1° btdc at an idle speed of 580 ± 20 rev/min. At the same time the basic compensation current to the EHA should read a stable 0 ± 1.0mA on the multi-meter.

Note On cars fitted with catalytic converters the ignition timing should be 8° ± 1° btdc and the basic compensation current to the EHA should be oscillating about a median of zero milliamps.

Part load

9. Remove the bridge cable from the black/pink and the blue/purple connections on the ECU side of the throttle position switch connector (see fig. 84-37).

10. Leave the connector plug and socket disconnected. This ensures that the engine is governed by the 'part load' engine managment system parameters.

11. Set the engine speed to 2000 ± 20 rev/min.

12. Ensure that the engine if still fully warmed-up and check that the ignition timing is 14° ± 1° btdc. At the same time the basic compensation current to the EHA should read -2 ± 2mA.

Note On cars fitted with catalytic converters the ignition timing should be 27° ± 1° btdc and the basic compensation current to the EHA should be oscillating about a median of zero milliamps. Deviation should be approximately ± 3 milliamps.

13. Stop the engine, remove the test equipment, and connect the throttle position switch connector.

14. If the fuel injection and ignition control system maps do not conform to the specification, refer to the appropriate fault diagnosis charts.

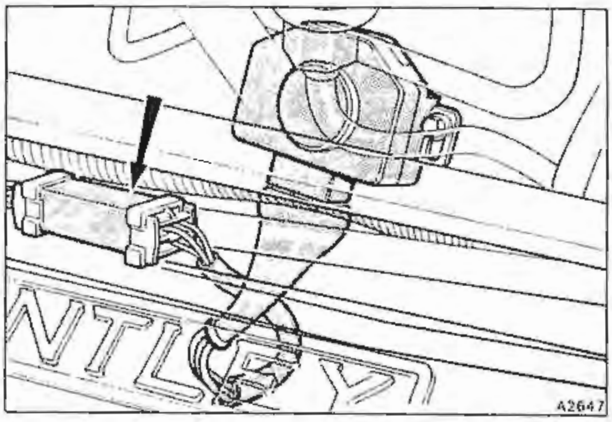

Fig. B4-37 Throttle position switch electrical connection

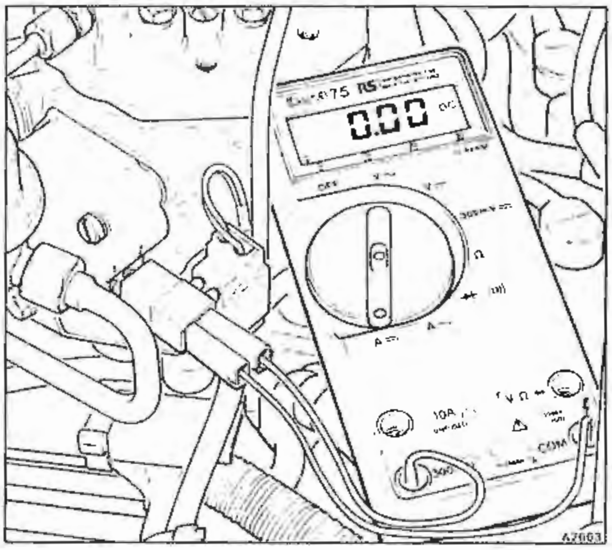

Fig. B4-38 Multi-meter connected in 'series' with the EHA

Diagnosing and correcting faults

The workshop procedure number given before the title of the operation refers to the fault diagnosis chart for the basic KE3 - Jetronic fuel injection system given in figure B4-34.

Before carrying out any tests, ensure that the battery is in a fully charged condition.

It should be noted that all components of the system (except the fuel injectors and cold start injector) can be tested on the vehicle.

Procedure 1 Fuel pump and/or pre-pump not operating correctly

For information relating to these components refer to Chapter C.

Procedure 2 Induction system air leaks

Visually check all vacuum hoses, pipes, and clips for damage or looseness that may allow an air leak into the induction system.

Check the entire induction system for air leaks with the engine running. Use a suitable length of rubber hose as a listening tube. The leak will often be heard as a high pitched hiss or whistle.

Procedure 3 Metering control unit lever sticking

1 Ensure that the engine temperature is above 20°C (68°F).

2. Remove the air intake elbow from the inlet to the control unit.

3. Apply pressure to the control piston in the fuel distributor for approximately 10 seconds (refer to page B4-22). Switch off the power to the fuel pumps.

4. Press the air sensor plate slowly downwards to its maximum open position. The resistance to this movement should be uniform over the whole range of travel. Allow the air sensor plate to return to its rest position and repeat the operation.

If the resistance to the air sensor plate movement is uniform over the whole range of travel, the metering unit lever is not sticking.

Note Always ensure that the fuel pumps are not running before depressing the airflow sensor plate. Otherwise, fuel will be sprayed into the engine on each occasion the airflow sensor plate is depressed.

5. Should the resistance to sensor plate movement be greater in the rest position, it could be due to the plate being either out of position or distorted due to impact damage (caused by an engine misfire).

6. If the condition described in Operation 5 is confirmed, depressurize the fuel system (refer to page B4-27). Press the plate fully downwards and allow it to return to the rest position.

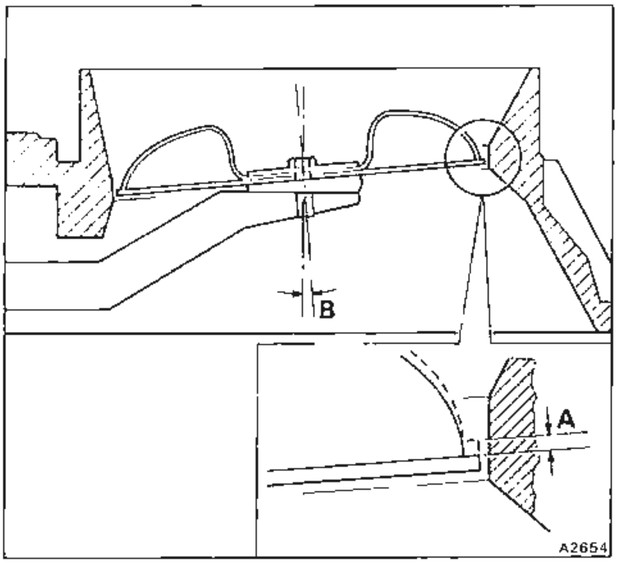

Fig. B4-39 **Air flow sensor plate position**
A 1,0mm (0.40in) free play with fuel system pressurized
B Sensor plate inclination 4.5°

7. Should a resistance be confirmed in Operation 6, remove the air sensor plate and repeat the operation. If this alleviates the resistance, the air sensor plate is fouling the sides of the air funnel and should be centralized (refer to Procedure 4) or the air funnel may be deformed in some way.

8. If there is still a resistance to the movement of the lever, it could be due to contamination within the fuel distributor barrel or occasional binding in the lever mechanism.

9. Contamination within the fuel distributor can be checked by separating the fuel distributor from the control unit for visual inspection.

Do not attempt to remove the control piston.

Remove the retaining screws situated on top of the fuel distributor. Lift off the fuel distributor (resistance will be felt due to the rubber sealing ring).

10. Examine the distributor for contamination.

11. Fit the fuel distributor by reversing the dismantling procedure. Ensure that the rubber sealing ring is in good condition and is lubricated with suitable grease.

Ensure that the retaining screws are evenly tightened.

12. If a resistance is still noticeable, a new assembly should be fitted.

13. After fitting the fuel distributor check the idle mixture strength.

Procedure 4 Positioning the air flow sensor plate

1. Remove the air inlet ducting from above the sensor plate.

2. Check that the sensor plate does not look deformed or damaged, particularly around its outside edge. Also ensure that the sensor plate will pass through the parallel section of the air funnel without fouling.

3. If necessary, loosen the plate securing bolt.

4. Insert the guide ring RH 9609 whilst retaining the sensor plate in the zero movement position. This will prevent the sensor plate from being forced downwards as the centring guide ring is being installed.

5. With the centring guide ring in position, tighten the retaining bolt to 5Nm (0,50kgf m to 0,55kgf m, 44 lbf in to 48 lbf in). Carefully remove the centring guide ring.

6. Apply pressure to the control piston in the fuel distributor for approximately 10 seconds (refer to page B4-42).

7. The air sensor plate should be positioned as shown in figure B4-39, with the plate not protruding above or below the parallel section of the air funnel.

8. If the air sensor plate is too high, carefully tap the guide pin lower (see fig. B4-40), using a mandrel and a small hammer.

Note This adjustment must be made very carefully, ensuring that the pin is not driven too low. Repeated adjustment can loosen the guide pin. Serious damage to the engine could result if the pin should fall out.

Procedure 5 Checking the operation of the idle speed actuator

It is important that the test equipment used to check the idle speed meets the following specification.

Accuracy - Rotational speed within ± 10 rev/min.
1. Start and run the engine until normal operating temperature is attained.
2. Disconnect the 2 way electrical plug connection from the front end of the actuator. The engine speed may drift from the controlled 580 ± 20 rev/min.
3. Hold the actuator body and reconnect the electrical plug. If the actuator is functioning correctly a pulse of armature movement should be felt and the engine idle speed should return to 580 ± 20 rev/min.

Note The return to this idle speed range will not be immediate. A certain amount of incremental engine speed stabilization will take place.

4. If the idle speed actuator control is outside the specifications, refer to the appropriate fault diagnosis flow chart on page B4-49.

Procedure 6 Checking the hot/cold start system

Refer to the modes of operation section and the fault diagnosis flow charts.

Procedure 7 Checking the cold start injector

1. Detach the electrical plug from the cold start injector (see fig. B4-1).
2. Remove the cold start injector from the induction manifold with its feed pipe attached. Place the nozzle of the injector into a suitable clean container so that the operation of the injector can be observed.
3. Produce a test lead using a Bosch electrical plug, two lengths of cable, and a micro-switch.
4. Connect the electrical plug to the cold start injector and the two cables, one to an auxiliary electrical feed and the other to an earth point.

Note Exercise care to eliminate the possibility of an electrical spark (use the micro-switch to make and break the circuit).

5. Apply electrical power to operate the fuel pump (refer to page B4-42).
6. Operate the micro-switch to complete the auxiliary electrical circuit. The cold start injector should spray fuel as the contacts in the micro-switch complete the electrical circuit; if it does not spray fuel, fit a new injector. Operate the micro-switch to break the auxiliary electrical circuit.
7. Dry the nozzle of the cold start injector.
8. Repeat Operation 5 but do not operate the micro-switch. Note that no drops of fuel should form on or drip from the injector nozzle. If the injector is defective a new one should be fitted.
9. Remove the auxiliary test lead from the injector. Fit the injector to the induction manifold and connect the loom plug.

Procedure 8 Checking the operation of the primary fuel circuit

Fuel delivery

1. Depressurize the fuel system (refer to Section A3).
2. Disconnect the fuel return line at the fuel pressure regulator lower connection. Using a 'firtree' type nipple and nut (SPM 1390/1), connect one end of an auxiliary fuel return hose to the connection. Hold the other end of the hose in a graduated measuring container capable of holding more than 10 litres (2.2 Imp gal, 2.6 US gal).
3. Apply electrical power to operate the fuel pumps (refer to page B4-42). At least 10 litres (2.2 Imp gal, 2.6 US gal) of fuel should be delivered into the measuring container within 5 minutes.
4. If the delivery quantity is satisfactory, check the primary system pressure. However, if the delivery quantity is below the prescribed amount proceed as follows. Check the fuel pump delivery after each operation.
5. Check the voltage at the fuel pump. When the pump is operating this should be 11.5 volts.
6. Fit a new 'in-tank' filter.
7. Fit a new main fuel filter.
8. Check the fuel lines for blockage.
9. Fit a new fuel pre-pump.
10. Fit a new fuel pump.
11. After establishing that the fuel delivery is correct, remove the test equipment.
12. Connect the fuel return pipe.

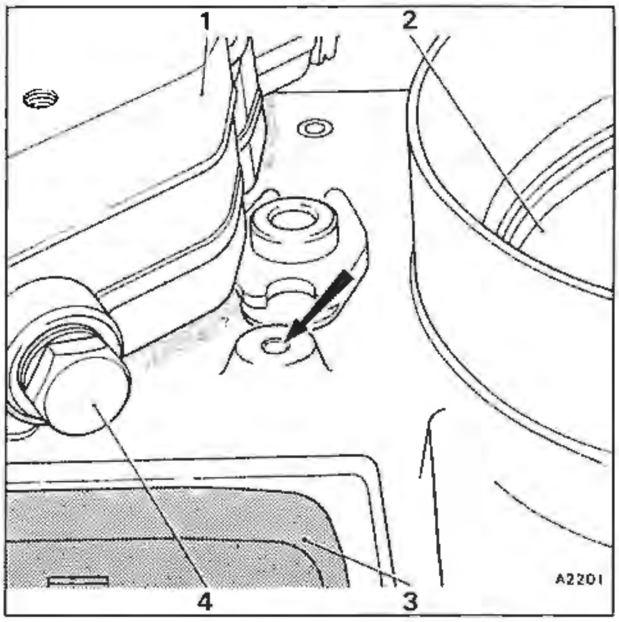

Fig. B4-40 Height adjustment for the air flow sensor plate
1 Fuel distributor
2 Air flow sensor plate
3 Electro-hydraulic actuator (EHA)
4 Lower chambers pressure tapping

Primary system pressure

To carry out this test, fit the pressure tester RH 9873 as shown in figure B4-46.

1. Apply electrical power to operate the fuel pumps (refer to page B4-42).
2. The pressure gauge will show primary system pressure which should be between 6,2 bar and 6,4 bar (89.9 lbf/in² and 92.8 lbf/in²).
3. If the primary fuel pressure is too high.

a. Check for a restriction in the fuel return line to the tank.

b. The fuel pressure regulator is faulty.

4. If the primary fuel pressure is too low.

a. Check the fuel supply.

b. The fuel pressure regulator is faulty.

Procedure 9 Checking the differential fuel (lower chamber) pressure

1. Ensure that the engine is at normal operating temperature.

2. Measure the primary system fuel pressure. Ensure that the reading is within the specification.

3. Remove the test equipment and re-connect the cold start injector pipe.

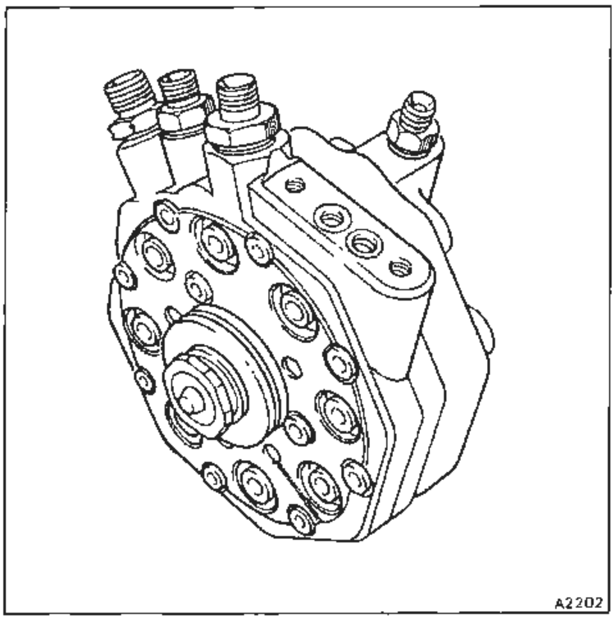

Fig. B4-41 Fuel distributor removed

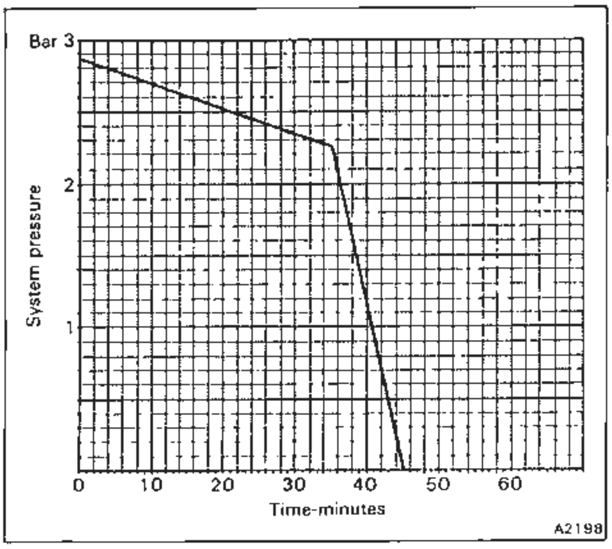

Fig. B4-42 Fuel system 'leak down'

4. Install the pressure tester RH 9873 as shown in figure B4-47.

5. Apply electrical power to operate the fuel pump for 30 seconds (refer to page B4-42). Switch off the power to the fuel pump.

The gauge will now show the differential pressure valve lower chamber pressure which should be between 5,7 bar and 5,9 bar (82.7 lbf/in² and 85.5 lbf/in²).

6. If the differential fuel pressure is outside the specified limits.

a. The fuel pressure regulator is faulty.

b. The fuel metering unit is faulty.

c. The electro-hydraulic actuator (EHA) is faulty.

d. The mA supply to the EHA is incorrect (refer to Fuel injection and ignition system maps).

Procedure 10 Check the fuel system for leaks

The engine should be at normal operating temperature for this test.

1. Fit the pressure tester RH 9873 as shown in figure B4-46.

2. Apply electrical power to operate the fuel pump for 30 seconds (refer to page B4-42).

3. Allow the primary system pressure to build-up. Switch off the power to the fuel pump.

4. Note the time it takes for the pressure to fall to zero and compare this with the graph for fuel system 'leak-down' (see fig. B4-42).

5. If the pressure loss is outside the acceptable limits, the leak may be due to.

a. Defective pressure regulator.

b. Leaking cold start injector.

c. Faulty non-return valve in the fuel pump.

d. Leaking accumulator diaphragm.

e. An external leak from one of the fuel system pipes.

f. One or more of the fuel injectors leaking.

Procedure 11 Checking the injectors

Cleanliness of components and their connections cannot be over emphasized for this test.

1. Clean all external fuel connections before removing the fuel injectors.

2. Remove the fuel injectors from the engine.

3. Connect one injector to the test equipment RH 9614 (Bosch Number KDJE 7452). Refer to figure B4-43.

Opening pressure

4. Bleed the discharge tube by moving the operating lever several times with the union slackened. Tighten the union.

5. Check the injector for dirt by operating the lever slowly at approximately one stroke per 2 seconds with the valve on the pressure gauge open.

If the pressure does not rise to between 1,0 bar and 1,5 bar (14.5 lbf/in² and 21.8 lbf/in²) the valve of the injector has a bad leak, possibly caused by dirt.

Attempt to flush the valve by operating the lever rapidly several times. If the injector valve does not clear the injector should be discarded.

6. Check the opening pressure of the injector by closing the valve of the test equipment. Bleed the

injector by operating the test equipment lever rapidly several times. Open the valve and move the lever slowly at approximately one stroke per 2 seconds. Note the pressure at which the injector begins to spray.

The correct pressure for the injector to commence spraying is between 3,9 bar and 4,1 bar (56.5 lbf/in² and 59.4 lbf/in²).

Leakage test

7. Open the valve on the test equipment and slowly operate the lever until the pressure reading is 0,5 bar (7.3 lbf/in²) below the previously determined opening pressure.
8. Hold this pressure constant by moving the lever.
9. No drips should appear from the injector for the next 15 seconds.

Evaluation of spray and 'chatter' test

10. Operate the lever of the test equipment at one stroke per second. As this is done, the valve in the end of the injector should be heard to 'chatter'.
11. The injector should produce an even spray with an approximate spray angle of 35°. If drops form at the mouth of the injector valve, or if the spray is excessively one-sided, the injector should be discarded.

The various spray formations and angles are shown in figure B4-44.

Repeat Operations 1 to 11 inclusive on the remaining injectors noting that only new test fluid must be used to replenish the reservoir of the test equipment.

Procedure 12 Checking the delivery balance of the fuel distributor

1. Fit the delivery quantity comparison tester RH 9613 (Bosch Number KDJE 7455).
2. Remove the air intake elbow to reveal the air sensor plate.
3. Apply electrical power to operate the fuel pump and build-up pressure in the system (refer to page B4-42).
4. Bleed the test equipment.
5. This test is carried out under simulated idle, part load, and full load conditions as follows.

Note The test equipment rotameter scale may read either ml/min or cm³/min. Whichever scale is used, the flow figures are identical (i.e. 1ml/min=1 cm³min).

Idle conditions

6. Press switch number one on the test equipment and move the air flow sensor plate downwards (using the adjusting device shown in figure B4-45) until the reading on the small rotameter indicates a flow of approximately 6,7 ml/min.
7. Test the remaining outlets and determine which one has the lowest fuel delivery.
8. Press the switch of the outlet with the lowest fuel delivery and using the adjusting device, adjust the height of the air flow sensor plate until the reading on the rotameter is 6,7 ml/min.
9. Measure the fuel delivery from each outlet, noting that none of them should exceed 7,7 ml/min.

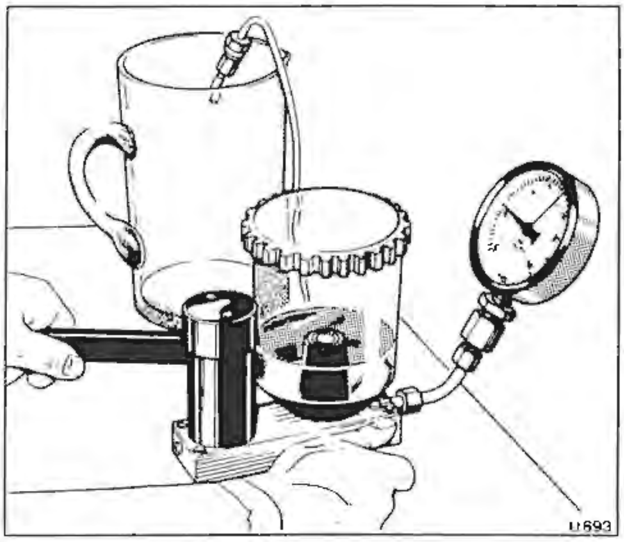

Fig. B4-43 Testing an injector

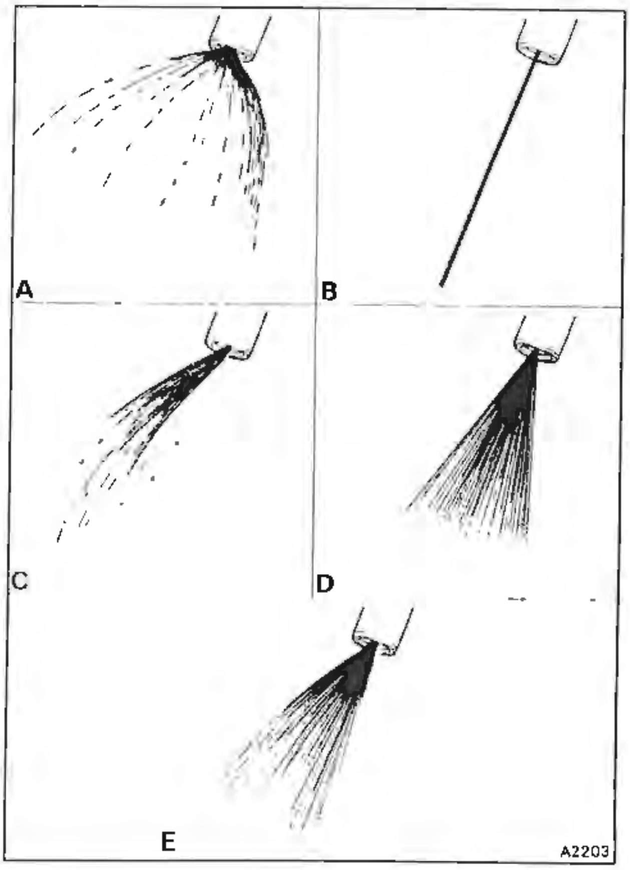

Fig. B4-44 Injector spray patterns
Unacceptable spray patterns
A Drop formation
B Cord spray
C Spray in strands
Acceptable spray patterns
D Good spray formation
E Single-sided but still a good spray formation

Part load conditions

10. Repeat Operations 6 to 9 inclusive, moving the air flow sensor plate downwards, until a fuel delivery of 20,8 ml/min is measured (on the large rotameter) from the fuel outlet with the lowest delivery.

11. Measure the fuel delivery from each outlet, noting that it should not exceed 22,4 ml/min.

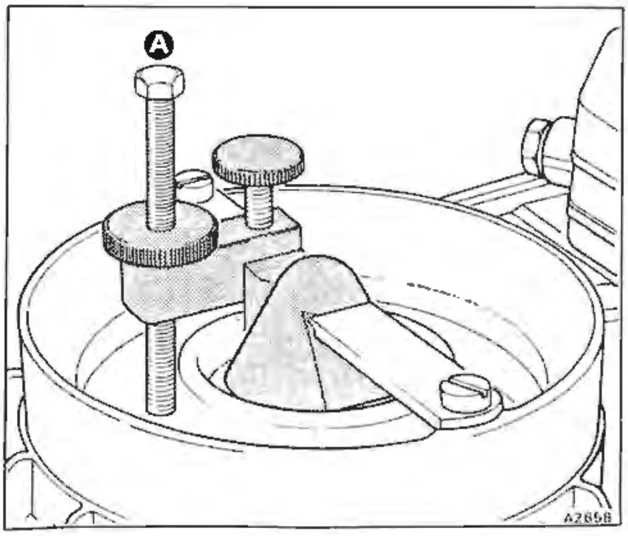

Fig. B4-45 Air flow sensor plate movement adjustment device
A Adjusting screw (part of accessory kit RH 9960)

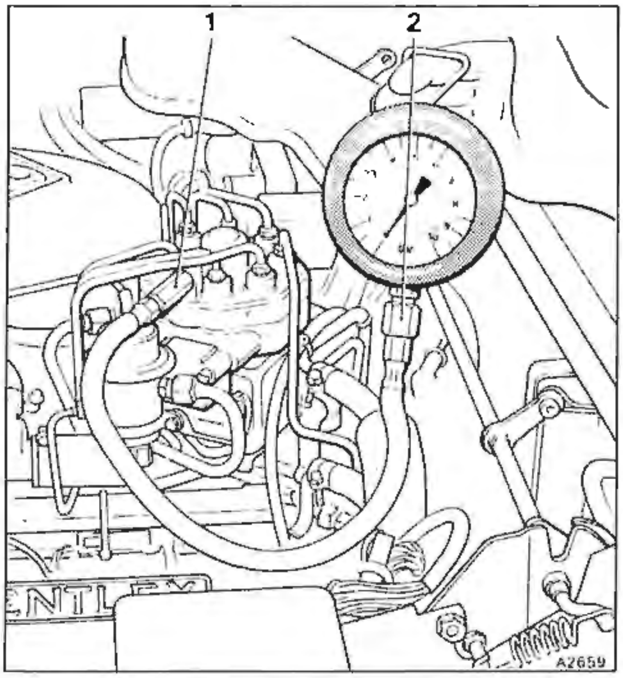

Fig. B4-46 Pressure tester equipment - testing for leaks or primary system pressure
1 Pressure gauge assembly RH 9873
2 Special adapter RH 9881

Full load conditions

12. Repeat Operations 6 to 9 inclusive, moving the air flow sensor plate further downwards, until a fuel delivery of 94 ml/min is measured from the fuel outlet with the lowest delivery.

13. Measure the fuel delivery from each outlet, noting that it should not exceed 99 ml/min.

If the fuel delivery exceeds the limits quoted, a new distributor should be fitted.

Procedure 13 Checking the operation of the throttle plates

1. Depress the accelerator pedal fully and observe the position of the throttle levers.
2. Ensure that the throttle levers are fully open (i.e. against the stops).
3. Also, ensure that the throttle linkage operates smoothly through both primary and secondary stages.
4. If the throttles do not open fully, or if the linkage does not operate smoothly, the problem should be investigated and corrected as described in Chapter K.

Procedure 14 Checking the fuel accumulator diaphragm for a leak

1. Locate the flexible hose connecting the accumulator to the fuel tank return pipe.
2. Suitably clamp the hose to prevent unpressurized fuel from flowing out during the test.
3. Unscrew the worm drive clip securing the flexible hose to the connection on the fuel accumulator.
4. Withdraw the hose from the connection.
5. Apply electrical power to operate the fuel pump (refer to page B4-42) and pressurize the fuel accumulator.
6. Ensure that no fuel flows from the open connection on the fuel accumulator during the test.
7. If fuel does flow from the open connection, the accumulator diaphragm is leaking and a new fuel accumulator must be fitted.
8. Connect the fuel pipe and remove the clamp.

Procedure 15 Blocked air filter or ducting

1. Remove the air filter element.
2. Examine the condition of the element and fit a new one if necessary.
3. Inspect the filter housing assembly.
4. Inspect the intake 'scoop' that diverts air from below the front bumper assembly into the filter housing (refer to Chapter J). Ensure that the flow of air is not restricted.
5. Inspect the intercooler matrix (refer to Chapter J). Ensure that the matrix is not blocked, thus restricting either the flow of cooling air or the flow of intake air.
6. Slacken the worm drive clips and free each section of flexible hose in turn. Ensure that each section is in good condition and not restricted.
7. Ensure that the air intake elbow is not restricted.
8. Spin the compressor blades of the turbocharger assembly to ensure that the blades rotate freely.
9. Carry out the test given in the Workshop procedures 4 and 13.
10. Fit all hoses, clips, and the filter element upon

satisfactory completion of the tests.

Fault diagnosis test equipment and special procedures
This section contains information relating to the fitting procedures for the test equipment used when diagnosing a fault. Also included are the special procedures associated with the fuel injection system.

Depressurizing the fuel system
The fuel in the system may be pressurized. Therefore, it is recommended that the fuel system be depressurized before commencing any work that involves dismantling parts of the system.

The depressurizing procedure is given in Section A3.

Fuel injection system - pressure tester
The pressure tester equipment (see figs. B4-46 and B4-47) should be connected into the cold start injector feed line, on top of the fuel distributor or the lower differential pressure valve tapping point.

With the gauge connected at these points, the fuel system can be checked for.

a. Fuel system leakage either internal or external (see fig. B4-46).
b. Primary system fuel pressure (see fig. B4-46).
c. Differential fuel pressure (see fig. B4-47).

Installation of the test equipment

1. Carry out the usual workshop safety precautions.
2. Switch on the ignition. Ensure that the gear range selector is in the park position. Switch off the ignition and withdraw the gear range selector fuse (A6) from fuseboard F2.
3. Disconnect the battery.
4. Depressurize the fuel system.
5. The pressure gauge may now be connected to the fuel distributor as shown in either figure B4-46 or B4-47. Ensure that all pipe nuts and unions are tight.

Bleeding the test equipment
After fitting, but prior to using the test equipment always ensure that it is properly bled as follows

6. Apply electrical power to operate the fuel pump (refer to page B4-42).
7. Allow the gauge to hang down under its own weight with the flexible hose fully extended, for a few seconds.
8. Lift up the gauge and suspend it from a suitable point.
9. The pressure tester equipment is now ready for use.

Fuel delivery quantity comparison tester
If there is any discrepancy in the quantity of fuel delivered by the individual fuel distributor outlets, it can be measured by a comparison test, using the test equipment RH 9613 (Bosch Number KDJE 7455), refer to figure B4-48.

The test equipment is designed in such a way that the tests can be carried out without removing the fuel distributor from the engine.

Ideally, the tester should be set permanently on a

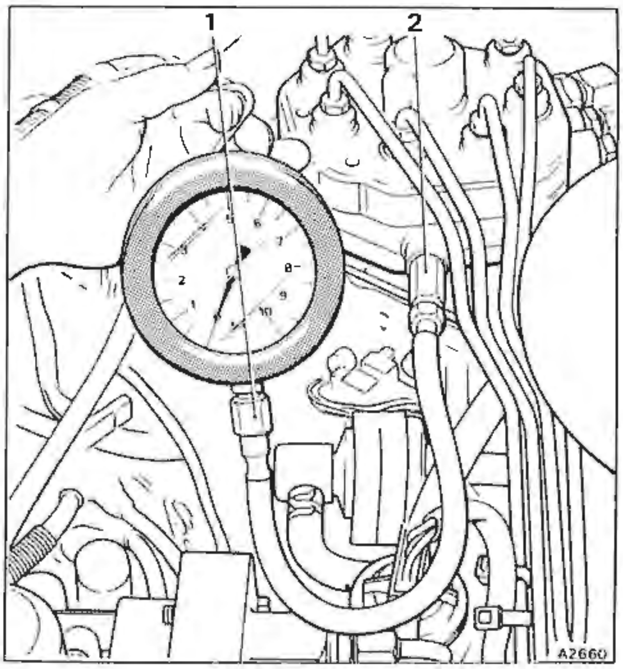

Fig. B4-47 **Pressure tester equipment - testing differential (lower chamber) pressure**
1 Pressure gauge assembly RH 9873
2 Special adapter RH 9881

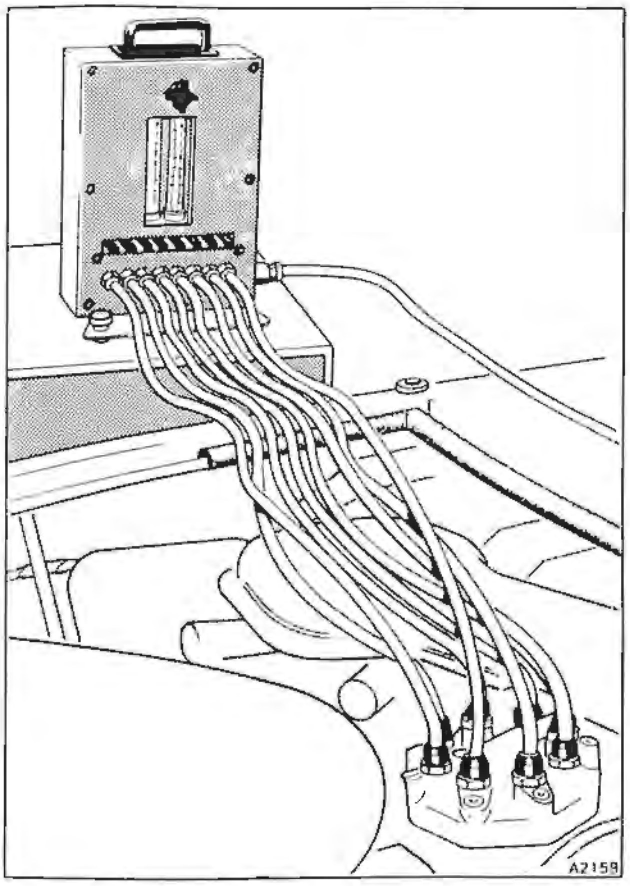

Fig. B4-48 **Installation of comparison tester**

mobile trolley, so that once it is levelled-up, only the trolley needs to be manoeuvred to the test site. However, the tester can be set up on a table close to the test vehicle and the test equipment is levelled-up for each test using the levelling screws and spirit level.

The test equipment should be fitted to the vehicle as follows.

1. Disconnect the battery.
2. Unscrew the unions securing the fuel injector lines to the fuel distributor outlets.

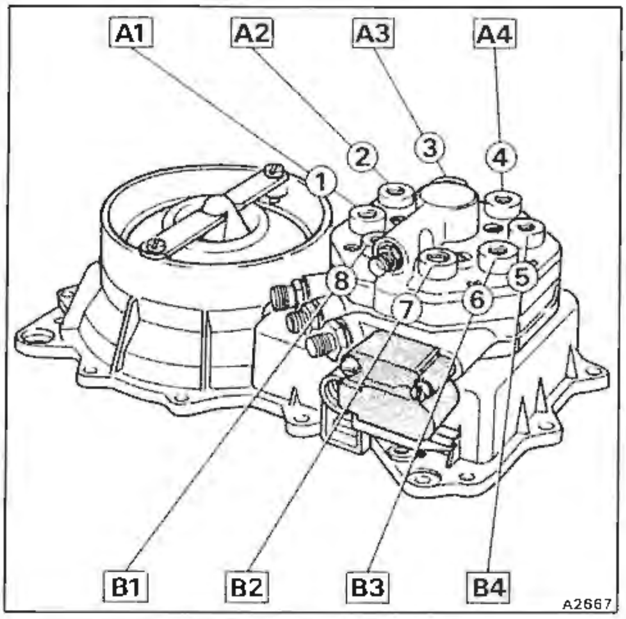

Fig. B4-49 Fuel distributor connections

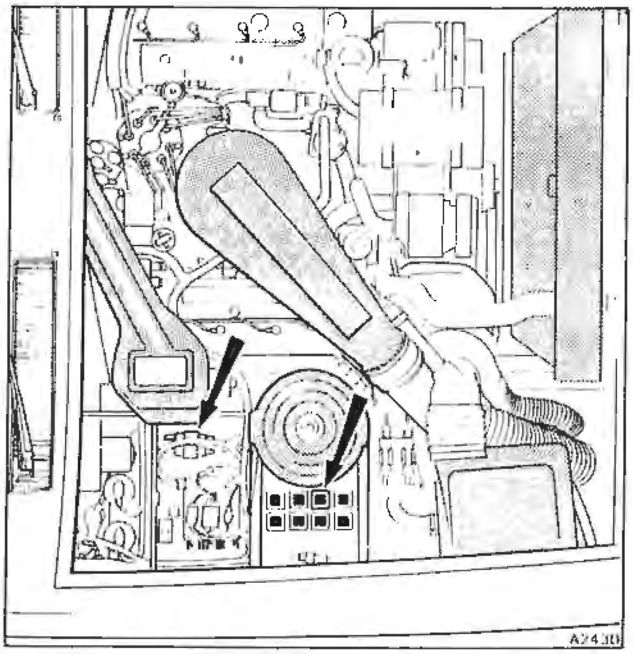

Fig. B4-50 ECU and relay compartments

3. Screw the special adapters supplied with accessory kit RH 9960 into the fuel distributor outlets.
4. Fit the automatic couplings fastened on the ends of the test equipment to the special adapters in the fuel distributor outlets.

Note Outlet one from the distributor should always be nearest to the fuel inlet connection. Figure B4-49 indicates which test line and switch of the test equipment are connected to which engine cylinder.

5. Route the fuel return pipe across the engine, along the side of the car and into the filler for the fuel tank.
6. Connect the battery.

Note The condition of the battery is critical for this test. Therefore, always check the state of charge of the battery.

7. Apply electrical power to operate the fuel pump (refer to page B4-42).
8. To bleed the test equipment, remove the air intake ducting from the mixture control unit and push the air flow sensor plate downwards to its fully opened position. Press each key on the flowmeter one after the other, whilst simultaneously operating the three-way tap. Continue this operation until there are no bubbles in the two rotameters.
9. Allow the air sensor plate to return to the zero position.

The test equipment is now ready for use.

10. To remove the test equipment, depressurize the system and reverse the procedure.

Apply fuel pressure to the system

1. Carry out the usual workshop safety precautions.
2. Ensure that the automatic air conditioning system is switched off. Remove fuse A1 from fuseboard F1.
3. Remove the ECU compartment cover situated to the rear of the right-hand front road spring cover.
4. Disconnect the oxygen sensor (if fitted) inside the ECU compartment (see fig. B4-50).
5. Withdraw the fuel pumps relay located inside the ECU compartment (see fig. B4-50).
6. Produce a short bridge cable containing a micro-switch. The micro-switch is used to 'make' and 'break' the test circuit, thus eliminating the possiblity of a spark.
7. Ensure that the contacts in the micro-switch are not 'made' (i.e. the bridge cable is open circuit).
8. Bridge the pink and white/pink cable in the relay base, using the auxiliary bridging cable. Complete the circuit by operating the micro-switch. The fuel pumps will now run and pressurize the system.

Removal and fitting of components

Before dismantling any connections and removing any components always depressurize the system and carry out the usual workshop safety precautions.

Always blank off any open connections to prevent the ingress of dirt.

Mixture control unit (see figs. B4-51 and B4-52)
The mixture control unit comprises the air meter and fuel distributor.

The fuel distributor can be removed separately from the mixture control unit, however, in the process of general dismantling the components would be removed as one assembly.

Fuel distributor - To remove and fit

1. Carry out the usual workshop safety precautions, including disconnecting the battery and depressurizing the fuel system.

2. Unscrew and remove the following connections on the fuel distributor.

a. Fuel supply to the fuel distributor.

b. Fuel supply to the cold start injector.

c. Small diameter pipe between the fuel distributor and the pressure regulator.

3. Unscrew the unions from both ends of the eight injector pipes and carefully withdraw the pipes.

4. Using a screwdriver, unscrew the securing screws

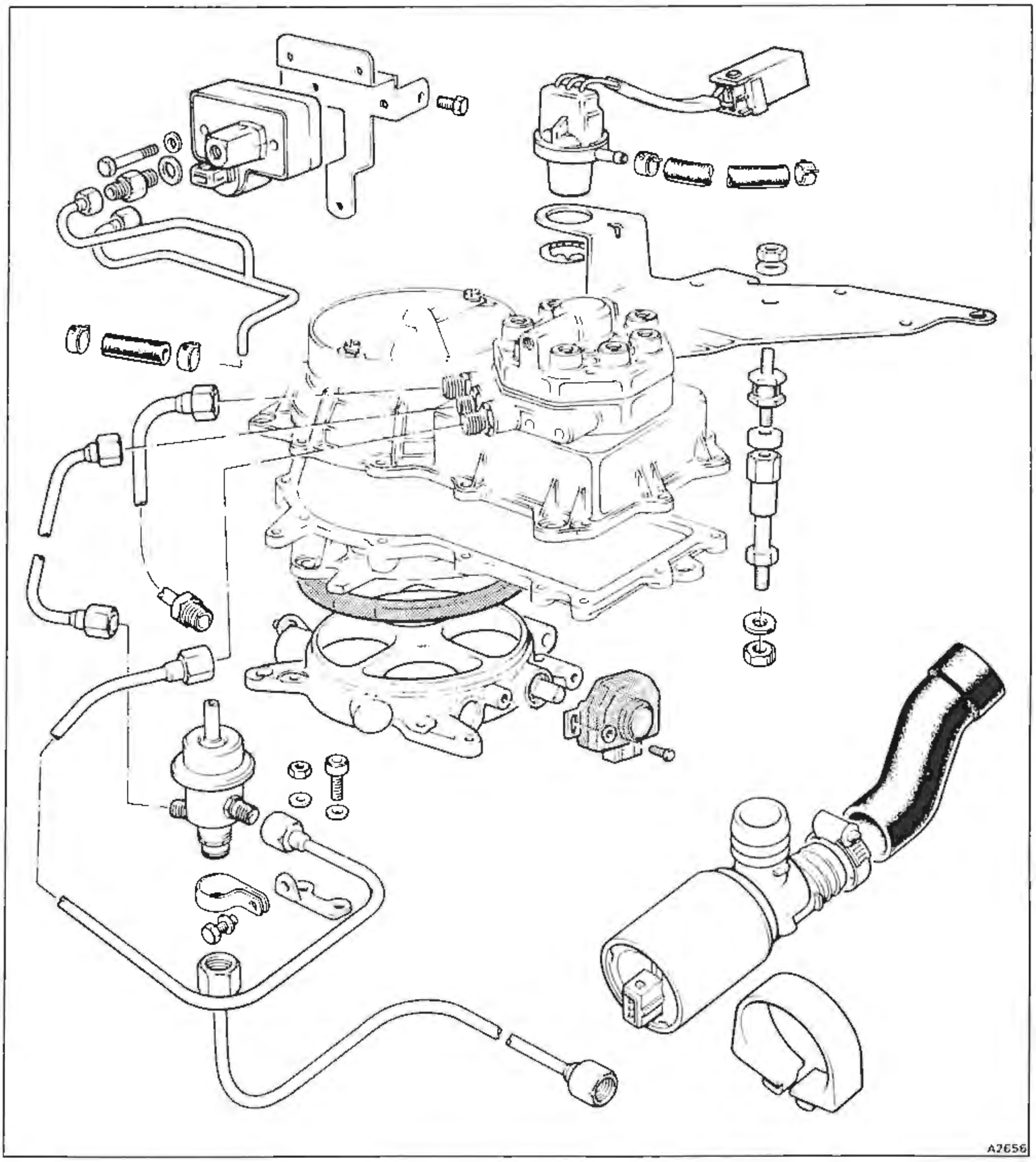

Fig. B4-51 Fuel distributor and associated compartments situtated on top of the distributor.

5. Lift the fuel distributor from the mixture control unit and collect the rubber sealing ring (resistance will be encountered due to the rubber sealing ring).

6. Do not remove the control piston from the fuel distributor.

7. Fit the fuel distributor by reversing the removal procedure, noting that the rubber sealing ring fitted in between the fuel distributor and mixture control unit must be in good condition. If in doubt, fit a new sealing ring. When installing the sealing ring ensure that it is lubricated with a suitable grease and that it does not become trapped when the fuel distributor is fitted. This could cause a subsequent air leak which may be difficult to detect.

8. Check the idle mixture strength.

Mixture control unit - To remove and fit
(see figs. B4-51 and B4-52)

1. Carry out the usual workshop safety precautions, including disconnecting the battery and depressurizing the fuel system.

2. Unscrew the worm drive clips securing the air intake hose to the cast elbow. Free the joint.

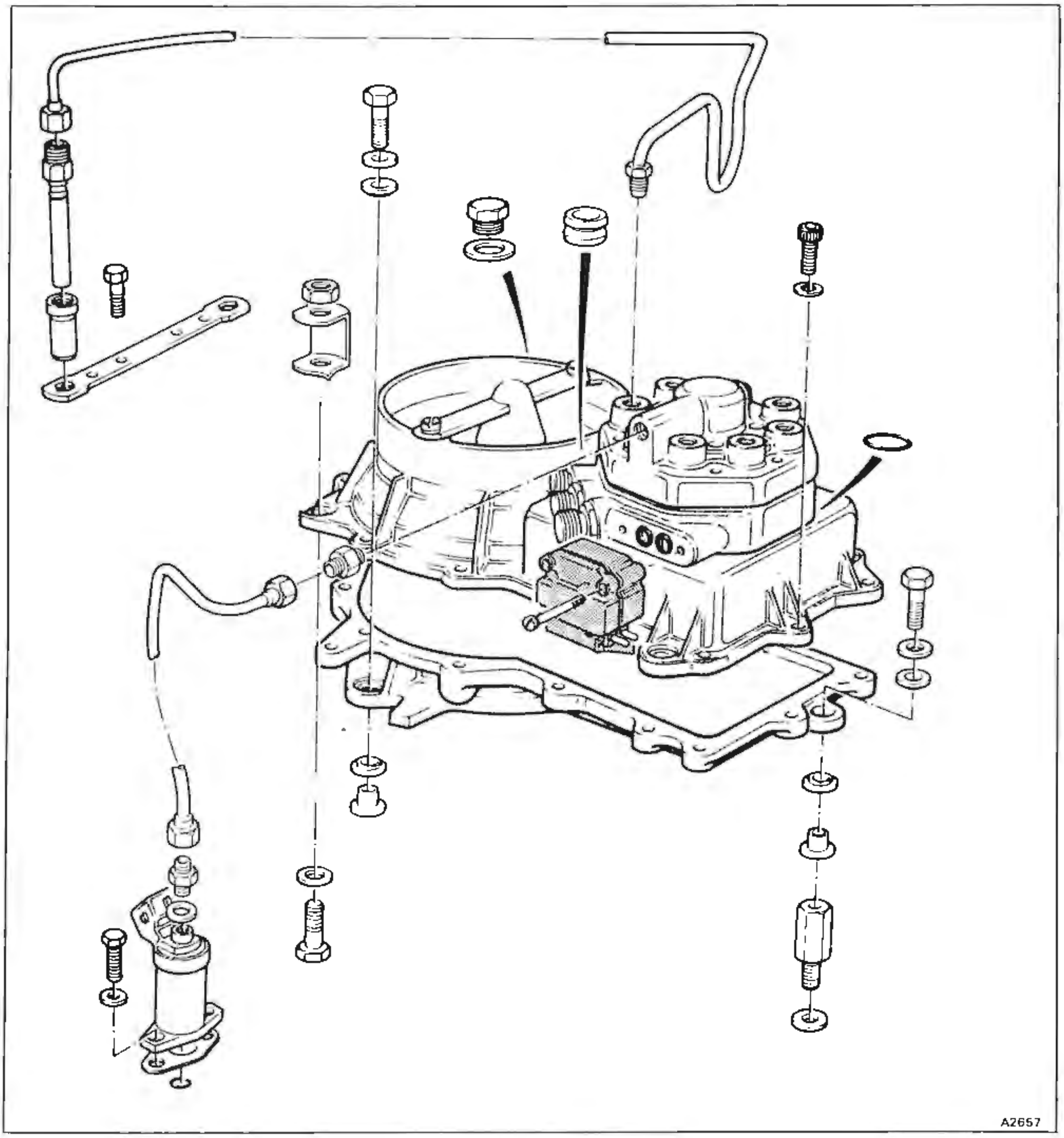

Fig. B4-52 Fuel distributor and associated compartments

3. Unscrew the worm drive clips securing the dump valve flexible hose to the return pipe. Free the joint.
4. Free the small diameter signal hoses to the dump valve.
5. Unscrew the two setscrews retaining the cast intake elbow via its mounting brackets to the mixture control unit.
6. Withdraw the intake elbow and rubber sealing ring.
7. Unscrew the injector pipe nuts from the top of the fuel distributor. Free the pipes.
8. Unscrew and remove the following connections on the fuel distributor.
a. Fuel supply to fuel distributor.
b. Fuel supply to cold start injector.
c. Small diameter pipe between the fuel distributor and the pressure regulator.
9. Unscrew the pipe nut securing the fuel return pipe to the bottom of the pressure regulator.
10. Unscrew the two mounting setscrews, one at the front and one at the rear of the unit.
11. Detach the electrical cables to.
a. The electro-hydraulic actuator.
b. The air flow sensor potentiometer.
c. The dump valve solenoid valve.
d. The dump valve vacuum switch.
12. Free the small diameter signal hoses to the solenoids and vacuum switches.
13. Unscrew the rear mounting nut (situated under the dump valve solenoid) and the front mounting setscrew (situated under the dump valve).
14. Carefully lift the assembly from the engine with the ancillary units still attached.
15. Remove the upper section of the mixture control unit from the lower half (air outlet duct) by unscrewing the cap nuts situated around the face joint.
16. Fit the assembly by reversing the procedure given for removal, noting that the face joint between the two halves of the assembly should be clean and coated with Wellseal.
17. Ensure that any rubber sealing rings that have been disturbed are in good condition.

Note Whenever a hose or an electrical plug is disconnected, it is advisable to attach an identification label to facilitate assembly.

In additon any open connections should be blanked as soon as possible to prevent the ingress of dirt.

Throttle body - To service

To remove, fit, and overhaul the throttle body refer to Chapter K.

Idle speed actuator - To remove and fit
(see figs. B4-24 and B4-51)

1. Carry out the usual workshop safety precautions.
2. Disconnect the electrical plug.
3. Unscrew the worm drive clips securing the two hoses to the actuator. Free the joints.
4. Carefully slide the actuator from its rubber mounting.
5. Fit the idle speed actuator by reversing the removal procedure.

Cold start injector - To remove and fit
(see figs. B4-10 and B4-52)

1. Carry out the usual workshop safety precautions, including disconnecting the battery and depressurizing the fuel system.
2. Detach the electrical plug from the cold start injector.
3. Unscrew the union connecting the fuel feed pipe to the injector.
4. Unscrew the two small setscrews retaining the injector in position. Collect the washer from each setscrew.
5. Withdraw the injector and collect the rubber sealing ring.
6. To fit the cold start injector reverse the procedure given for removal.

Injector - To remove and fit (see figs. B4-9 and B4-52)
There are eight injectors fitted to the engine one for ech cylinder. The removal and fitting procedure given below is for one injector but the instructions apply equally to all of the injectors.

1. Carry out the usual workshop safety precautions, including disconnecting the battery and depressurizing the fuel system.
2. Free the loom rail from the respective side of the engine. Manoeuvre the rail away to gain access to the injectors.
3. Unscrew the union connecting the fuel line to the injector.
4. Unscrew the two setscrews securing the injector retaining plate to the cylinder head.
5. Remove the plate and withdraw the injector.
6. Fit the injectors by reversing the procedure given for removal, noting that the rubber insuleting sleeve must be in good condition.

It is essential to check the spray patterns of the injectors before they are fitted.

New injectors must be thoroughly flushed out before they are tested.

Fuel pressure regulator - To remove and fit
(see figs. B4-12 and B4-51)

1. Carry out the usual workshop safety precautions, including disconnecting the battery and depressurizing the fuel system.
2. Unscrew the pipe nuts of the three connections to the assembly.
3. Unscrew the small setscrew retaining the regulator to its mounting bracket.
4. Withdraw the assembly.
5. Fit the regulator by reversing the removal procedure.

Electro-hydraulic actuator - To remove and fit
(see fig. B4-17)

1. Carry out the usual workshop safety precautions, including disconnecting the battery and depressurizing the fuel system.
2. Remove the fuel pressure regulator.
3. Unscrew the two **special** (non-magnetic) retaining screws and withdraw the actuator.

4. Fit the actuator by reversing the removal procedure, noting the following.

a. Always ensure that the rubber sealing rings are in good condition.

b. Always use the special non-magnetic screws to secure the actuator in position.

K-Motronic electronic control unit (ECU) - To remove and fit

1. Carry out the usual workshop safety precautions, including disconnecting the battery.
2. Remove the ECU compartment cover situated to the rear of the right-hand front road spring cover.
3. Locate the K-Motronic ECU (see fig. B4-21).
4. Unscrew the two securing screws from the upper end of the ECU.
5. Free the ECU from the retaining clip situated at the lower end of the unit.
6. Disconnect the multi-plug from the lower end of the unit.
7. Fit the ECU by reversing the procedure.

Service adjustment

Preliminary checks

Before carrying out any tuning, the following basic checks should be made.

a. Check the condition of the sparking plugs.

b. Ensure that the throttle linkage is correctly set (refer to Chapter K).

c. Ensure that the throttle position switch is correctly set (refer to Chapter K).

d. Check all air hoses and connections.

e. Check the security of the electrical connections to the fuel injection system and ignition control system components.

f. Ensure that the warnings relating to the running of turbocharged engines in a workshop environment are understood (refer to Chapter D).

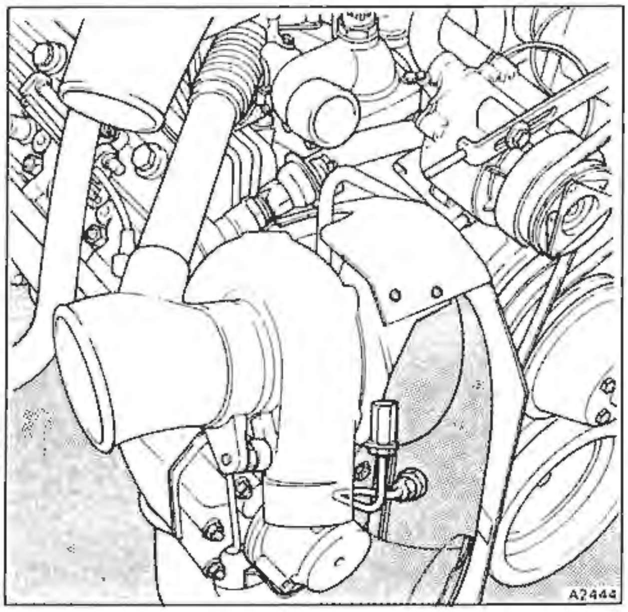

Fig. B4-53 **Exhaust CO tapping (Cars fitted with catalytic converters)**

g. Start the engine and visually inspect the fuel system for leaks.

h. Whilst the engine is running, check the entire induction system for leaks (refer to this section, Workshop procedure 2).

Before undertaking the tuning procedure, the following work should be carried out.

1. Connect an impulse tachometer and an ignition stroboscope lamp to the engine in accordance with the manufacturer's instructions. These two functions can be accomplished by fitting a compact tester (e.g. Bosch MOT 201) to the engine.
2. Insert the sample probe of a CO meter as far as possible into either exhaust tailpipe.

On cars fitted with catalytic converters, connect the sample probe of the CO meter to the special tapping situated by the turbocharger (see fig. B4-53).

Tuning procedure

If the complete tuning procedure is to be carried out the following sequence of operations is recommended.

a. Carry out the preliminary checks a to f inclusive.

b. Turn the ignition key to the RUN position and ensure that the 'Check Engine' warning panel is illuminated. Turn the key to the START position. Ensure that the engine starts and that the 'Check Engine' warning panel extinguishes.

On cars fitted with catalytic converters, if the lamp remains illuminated refer to the 'On-board' fault diagnosis chart (see fig. B4-36).

Note If repeated and/or extended engine cranking is required for a particular diagnostic test, the electrical plug should be disconnected from the cold start injector. This will prevent the sparking plugs becoming fouled due to continued cold start injection operation.

c. Confirm that the engine is running on all eight cylinders and carry out the preliminary checks g and h.

d. Ensure that the engine has stabilized at its normal operating temperature.

e. On cars fitted with catalytic converters, carry out an initial 'open loop' mixture strength check.

f. Carry out basic fuel and ignition system functional checks. These include checking the operation of the throttle position switch and the system operating maps (refer to this chapter).

g. Check the operation of the idle speed actuator (refer to this chapter).

h. Check the operation of the dump valve (refer to Chapter D).

i. Check and set the idle mixture strength.

j. *Check the operation and flow rate of the purge control system (refer to Chapter G).

k. *Check the operation of the air injection system (refer to Chapter F).

l. *On all cars fitted with catalytic converters, carry out an 'on-board' diagnostic check to confirm that there are no faults stored in the ECU (blink code 4.4.4.4. should register).

m. Tamperproof the mixture adjustment screw.

n. Remove all test equipment.

Note The asterisks denote a system only fitted to certain cars.

Idle mixture strength - To check and set

Adjustment to the idle mixture strength should not normally be necessary, as this is set and sealed during manufacture of the vehicle. However, if either new parts are fitted or the setting is disturbed proceed as follows.

1. Ensure that the crankcase is completely sealed for this exercise, which means that the oil filler cap **must be closed** and the engine oil dipstick pushed firmly into position.

2. Before taking any reading, it is important to note the following information concerning the test equipment.

Accuracy - CO meter range 0% to 2%
CO concentration within 0.1%
Rotational speed within 10 rev/min

3. On cars fitted with catalytic converters, disconnect the electrical plug from the EHA. Mixture strength is adjusted under 'open loop' conditions.

4. On cars fitted with a fuel evaporative emission control system, disconnect the purge hose from the induction manifold and blank the manifold tapping.

5. Insert the probe of a suitable CO meter as far as possible into either exhaust tailpipe.

On cars fitted with catalytic converters, connect the sample probe of the CO meter to the special tapping situated by the turbocharger (see fig. B4-53).

6. Start and run the engine. Allow both the engine and CO meter to fully warm-up.

It is essential that the engine coolant has stabilized at its normal operating temperature of approximately 80°C (176°F). The ambient air temperature should be between 15°C and 30°C (59°F and 86°F).

7. Check the idle speed exhaust gas CO reading. This should be 0.9% ± 0.1% at 580 ± 20 rev.min, with the transmission in park and the automatic air conditioning system switched off.

If the idle CO concentration is outside the specified limits adjust by carrying out Operations 8 to 11 inclusive.

8. Remove the mixture adjustment screw access plug. Insert the mixture adjusting tool (see fig. B4-54) and adjust the idle mixture strength as required. The idle mixture screw should be turned clockwise to richen the mixture (increase CO%) and anti-clockwise to weaken the mixture (reduce CO%).

Remove the mixture adjusting tool after each adjustment and blank the airmeter aperture (mixture adjustment access hole) to prevent the entry of unmetered 'false air'. **Failure to blank the access hole will result in an incorrect CO measurement.**

Note Always make the mixture adjustment from the lean mixture strength side (i.e. if the idle CO concentration is too high, initially turn the idle mixture adjustment screw more than necessary in an anti-clockwise direction and then approach the correct setting with clockwise rotation of the mixture adjustment screw.

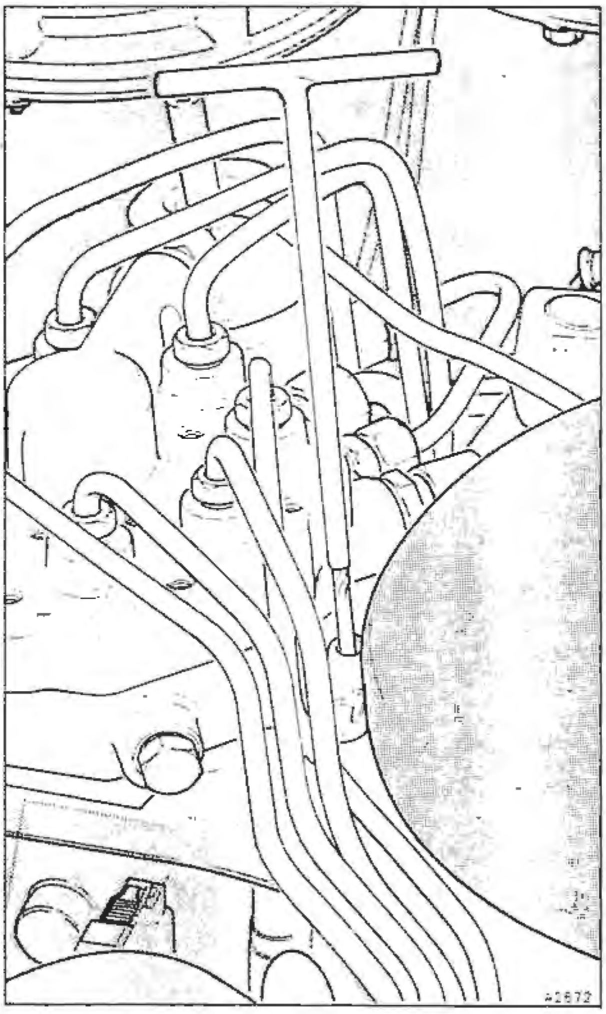

Fig. B4-54 Adjusting the idle mixture strength

9. Briefly open the primary throttles to increase the engine speed after each adjustment, this will allow a more stabilized idle CO setting to be achieved. Ensure that the primary throttles return to the correct idle position before the CO concentretion is checked.

10. Upon completion of the idle mixture strength adjustment, tamperproof the adjustment screw.

11. Stop the engine and remove the test equipment. Connect any cables that have been disconnected for the purpose of the test.

Tamperproofing

Two methods of tamperproofing the mixture strength adjusting screw are used.

On cars fitted with catalytic converters a metal plug is carefully driven into the access hole for the mixture strength adjustment screw.

On cars not fitted with catalytic converters a small screw is inserted into the mixture strength adjustment access hole. A black plastic plug is then pressed into the hole. If the plastic plug is fitted onto the end of a guide rod and then inserted, it will assist in the fitting operation.

Figure B4-55

Idle speed actuator – fault diagnosis chart

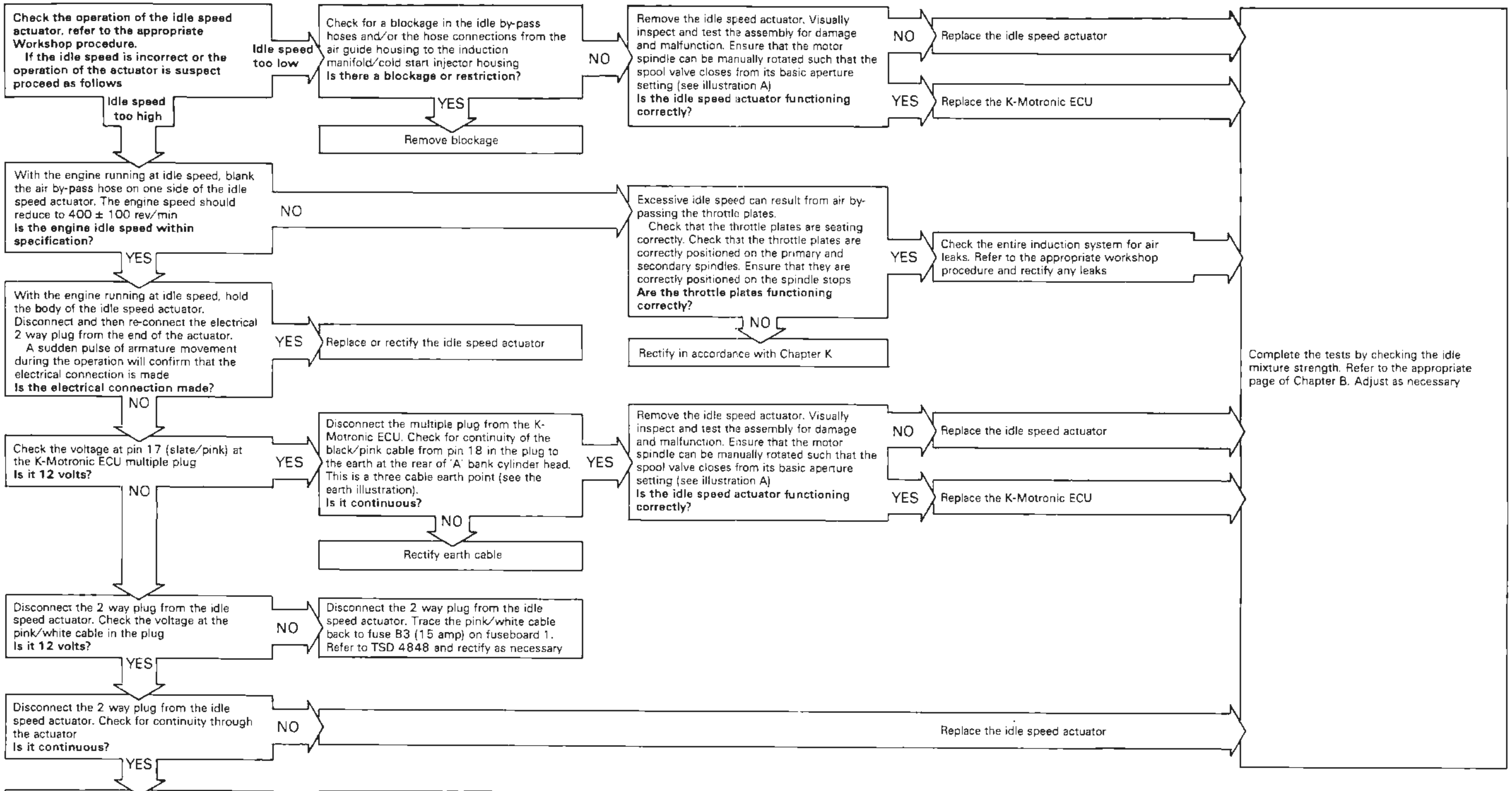

Check the operation of the idle speed actuator, refer to the appropriate Workshop procedure.
If the idle speed is incorrect or the operation of the actuator is suspect proceed as follows

Check for a blockage in the idle by-pass hoses and/or the hose connections from the air guide housing to the induction manifold/cold start injector housing
Is there a blockage or restriction?

Remove blockage

Remove the idle speed actuator. Visually inspect and test the assembly for damage and malfunction. Ensure that the motor spindle can be manually rotated such that the spool valve closes from its basic aperture setting (see illustration A)
Is the idle speed actuator functioning correctly?

Replace the idle speed actuator

Replace the K-Motronic ECU

With the engine running at idle speed, blank the air by-pass hose on one side of the idle speed actuator. The engine speed should reduce to 400 ± 100 rev/min
Is the engine idle speed within specification?

Excessive idle speed can result from air by-passing the throttle plates.
Check that the throttle plates are seating correctly. Check that the throttle plates are correctly positioned on the primary and secondary spindles. Ensure that they are correctly positioned on the spindle stops
Are the throttle plates functioning correctly?

Check the entire induction system for air leaks. Refer to the appropriate workshop procedure and rectify any leaks

Rectify in accordance with Chapter K

With the engine running at idle speed, hold the body of the idle speed actuator. Disconnect and then re-connect the electrical 2 way plug from the end of the actuator.
A sudden pulse of armature movement during the operation will confirm that the electrical connection is made
Is the electrical connection made?

Replace or rectify the idle speed actuator

Complete the tests by checking the idle mixture strength. Refer to the appropriate page of Chapter B. Adjust as necessary

Check the voltage at pin 17 (slate/pink) at the K-Motronic ECU multiple plug
Is it 12 volts?

Disconnect the multiple plug from the K-Motronic ECU. Check for continuity of the black/pink cable from pin 18 in the plug to the earth at the rear of 'A' bank cylinder head. This is a three cable earth point (see the earth illustration).
Is it continuous?

Remove the idle speed actuator. Visually inspect and test the assembly for damage and malfunction. Ensure that the motor spindle can be manually rotated such that the spool valve closes from its basic aperture setting (see illustration A)
Is the idle speed actuator functioning correctly?

Replace the idle speed actuator

Replace the K-Motronic ECU

Rectify earth cable

Disconnect the 2 way plug from the idle speed actuator. Check the voltage at the pink/white cable in the plug
Is it 12 volts?

Disconnect the 2 way plug from the idle speed actuator. Trace the pink/white cable back to fuse B3 (15 amp) on fuseboard 1. Refer to TSD 4848 and rectify as necessary

Disconnect the 2 way plug from the idle speed actuator. Check for continuity through the actuator
Is it continuous?

Replace the idle speed actuator

Disconnect the 2 way plug from the idle speed actuator. Check for continuity of the slate/pink cable from the plug to pin 17 in the K-Motronic ECU multiple plug and rectify as necessary

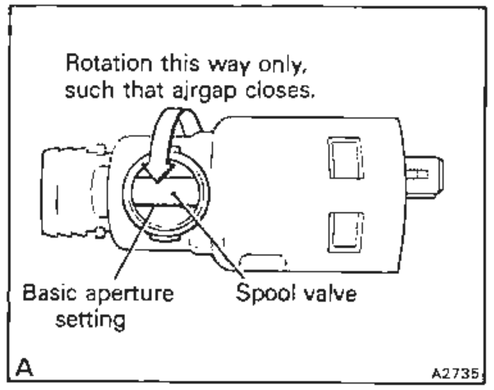

Important

Before carrying out a test ensure that the following conditions apply

1 The battery is fully charged
2 Use a multi-meter to carry out the tests
3 The ignition is switched off when either disconnecting or connecting electrical connections
5 Always remake any connections immediately a test is complete
6 Ensure that the fuse listed is intact
7 Ensure that the battery is fully charged
8 Always ensure a test is satisfactory before moving to the next test

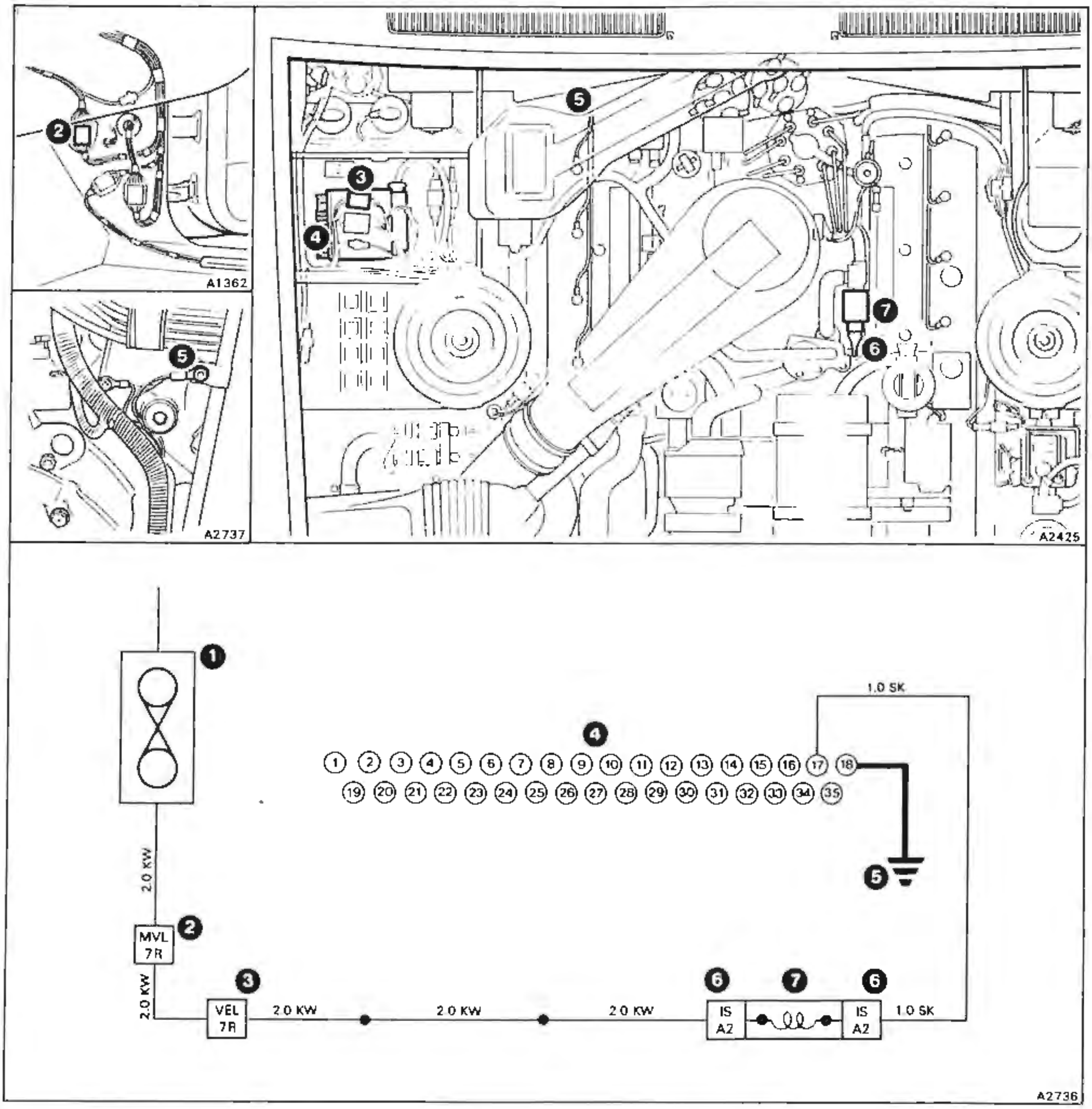

1 Fuseboard F1, fuse B3, 15 amp
2 Main loom to valance loom plug and socket 7 way – right-hand 'A' post
3 Valance loom to engine loom plug and socket 7 way – right-hand side
4 K-Motronic ECU
5 K-Motronic earth
6 Idle speed actuator 2 way plug
7 Idle speed actuator
● Splice

Ignition control system - Workshop servicing information

Health risks

Refer to Section A3, General information for health risk details relating to the ignition control system.

Workshop safety precautions

Refer to Section A3, General information for these details.

Additional information when working on the EZ 58F ignition control system

1. Do not start the engine unless the battery connections are securely fastened.
2. Do not isolate the battery from the vehicle electrical system when the engine is running.
3. Do not charge the battery whilst it is installed in the vehicle.
4. Always remove the K-Motronic ECU before carrying out any electrical welding work.

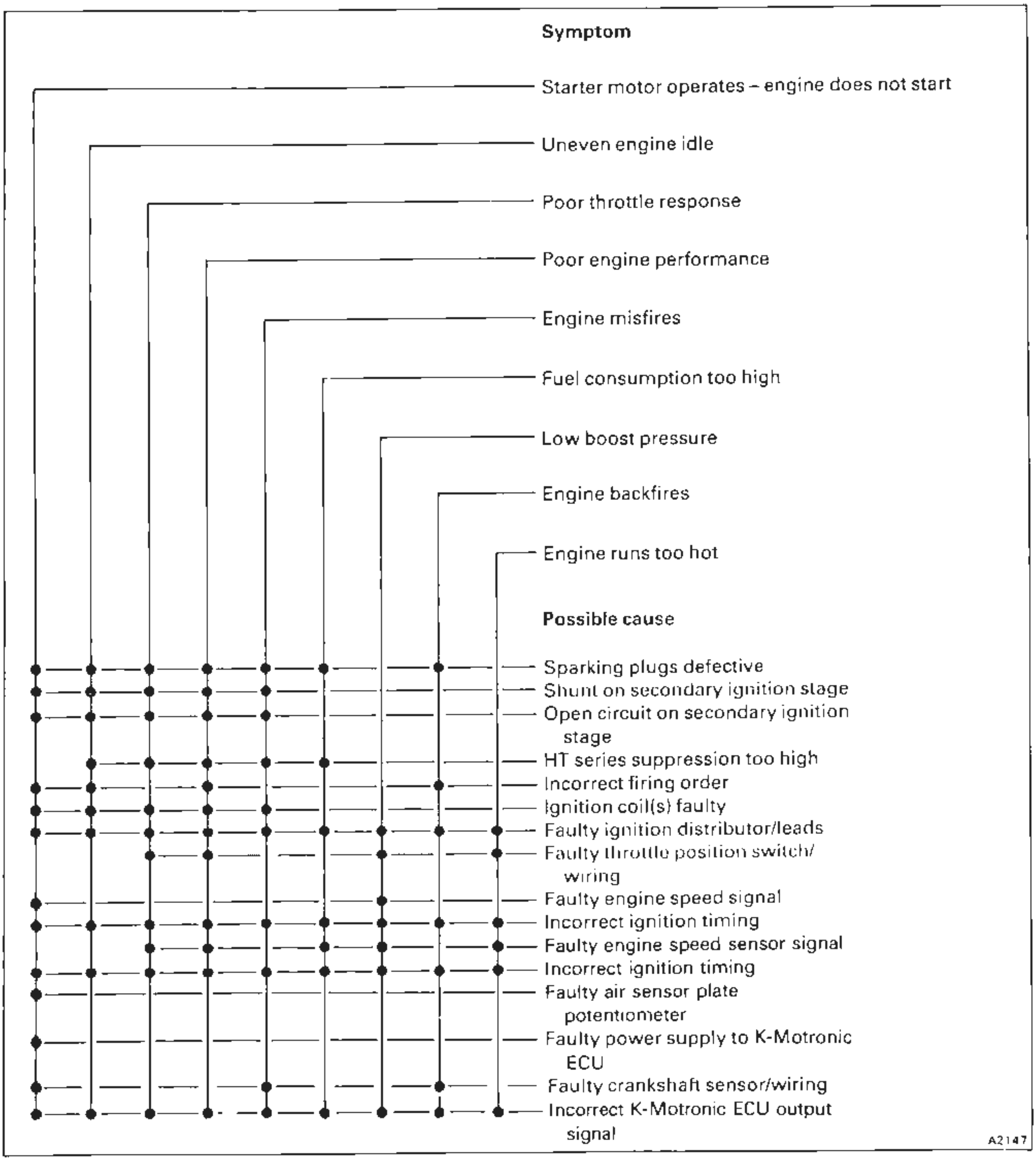

Possible cause	Starter motor operates – engine does not start	Uneven engine idle	Poor throttle response	Poor engine performance	Engine misfires	Fuel consumption too high	Low boost pressure	Engine backfires	Engine runs too hot
Sparking plugs defective	●	●	●	●	●	●		●	
Shunt on secondary ignition stage	●	●	●	●	●				
Open circuit on secondary ignition stage	●	●	●	●	●				
HT series suppression too high		●	●	●	●	●			
Incorrect firing order	●	●		●				●	
Ignition coil(s) faulty	●	●	●	●	●				
Faulty ignition distributor/leads	●	●	●	●	●	●	●	●	●
Faulty throttle position switch/ wiring			●	●			●		●
Faulty engine speed signal	●						●		
Incorrect ignition timing	●	●	●	●	●	●	●	●	●
Faulty engine speed sensor signal			●	●		●	●		●
Incorrect ignition timing	●	●	●	●	●	●	●	●	●
Faulty air sensor plate potentiometer	●								
Faulty power supply to K-Motronic ECU	●								
Faulty crankshaft sensor/wiring	●				●			●	
Incorrect K-Motronic ECU output signal	●	●	●	●	●	●	●	●	●

Fig. B4-56 Ignition system fault diagnosis chart

5. Always ensure that the wiring harness plugs are securely connected.
6. Do not disconnect or connect the wiring harness 35-way multiple plug of the K-Motronic ECU with the ignition switched on.
7. If repeated or extended engine cranking periods are required for a particular engine/vehicle diagnosis, the electrical plug should be disconnected from the cold start injector.
8. Always ensure correct polarity when making cable connections.
9. Always use a good quality digital multi-meter when carrying out tests on the system.
10. Do not pierce any electrical leads or looms with test probes, etc.
11. Do not remove the high tension lead situated between the ignition coil and distributor, when the engine is running.
12. Ensure that no 'arcing' takes place between electrical connections.

Exhaust gases

When running turbocharged engines for prolonged periods within enclosed working areas, always ensure that the exhaust gases are safely removed.

Whilst direct exhaust gas ventilation is available in some workshop areas, it is inevitable that extraction hoses will have to be used in certain circumstances, particularly when the vehicle is on a ramp. In these instances, large flexible exhaust adapter shrouds must be fitted to prevent a high level of depression being applied to the exhaust turbine seal in the turbocharger.

Under no circumstances should high depression exhaust gas extraction units be applied directly to the tailpipes.

Danger - high voltage levels

Dangerously high voltage levels are present in an electronic ignition system. These levels are not only present in individual components, but also in the wiring looms, plugs, sockets, and test connections.

The primary as well as the secondary circuit are subject to these high voltages.

Therefore, whenever the system is switched on ensure that you do not touch components/circuits contained within the ignition system.

Always wear thick rubber gloves and use insulated tools as an added precaution.

Fault diagnosis

This fault diagnosis section includes.

Basic system test procedures

Electrical and electronic components fault diagnosis

It is important that prior to commencing any fault diagnosis work on the digital ignition control aspect of the K-Motronic engine management system it must be established that the mechanical functions of the engine are operating correctly, that the KE3 - Jetronic fuel injection side of the K-Motronic engine management system is operating correctly, and that the battery is in a good state of charge.

Connect an impulse tachometer and an ignition stroboscope lamp to the engine in accordance with the manufacturer's instructions. These two functions can be accomplished by fitting a compact tester (e.g. Bosch MOT 21) to the engine.

Always use a good quality digital multi-meter to take any electrical measurements and ensure equipment suitable for testing high tension (HT) is available.

Note It is important that the test equipment used to check the ignition timing meets the following specification.

Accuracy - Ignition timing within ± 1°
Rotational speed within ± 10 rev/min.

When carrying out any work on the system it is essential that all workshop safety precautions are observed.

Basic fault diagnosis

The basic ignition system fault diagnosis chart given in figure B4-56 provides e list of basic symptoms and possible causes.

Some of the symptoms described could also be caused by a fuel system failure or a boost control system failure.

Detailed fault diagnosis and test procedure

The information contained in figure B4-57 provides detailed procedures for testing the ignition control system and where necessary the appropriate remedial steps to be taken when any rectification is required.

The various components of the system are shown in their locations on sheet 1, together with a wiring diagram.

Sheets 2 and 3 provide the step by step procedure for checking the system.

If any electrical fault is traced back beyond the engine loom plug and socket (see fig. B4-57, item 7), always refer to the Electrical Workshop Manual TSD 4848.

Removal and fitting of components

Before dismantling any connections and removing any components, ensure that any special precautions necessary are understood and the usual workshop safety precautions are carried out.

K-Motronic electronic control unit (ECU) - To remove and fit

To remove and fit the K-Motronic ECU refer to page B4-46.

Ignition driver module(s) - To remove and fit
(see fig. B4-58)

Always take care when commencing any work on a driver module. If the engine has been running, sufficient time must be allowed for the module to cool before commencing work.

1. Carry out the usual workshop safety precautions.
2. Label the cables to the two driver modules. This will facilitate identification upon assembly (see fig. B4-29). Withdraw the four cables.
3. If only the upper driver module is to be removed, this

Figure B4-57

Bosch EZ 58F digital ignition system – test programme

Sheet 1 of 3

The K-Motronic engine management system
To ease diagnosis of faults the K-Motronic engine management system is sub-divided into two sections, namely the Fuel injection system (KE3-Jetronic) and the Ignition control system (EZ 58F).
This electrical test programme contains details for testing the digital ignition control system.

When carrying out this test programme always ensure that the following conditions apply.

1. The usual workshop safety precautions are carried out.
2. The battery is in good condition.
3. Any cables or connections disconnected for a test must be re-made before proceeding to the next operation.
4. Always ensure that any faults are corrected before moving on to the next test.

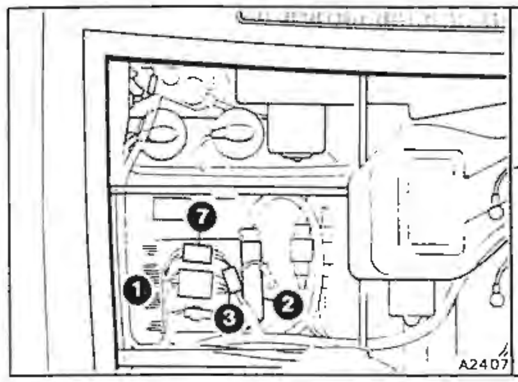

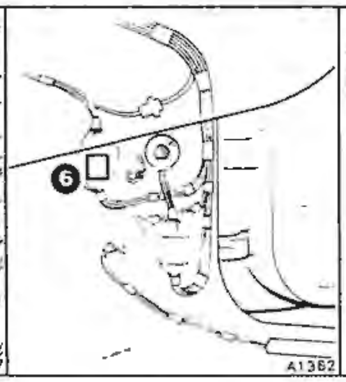

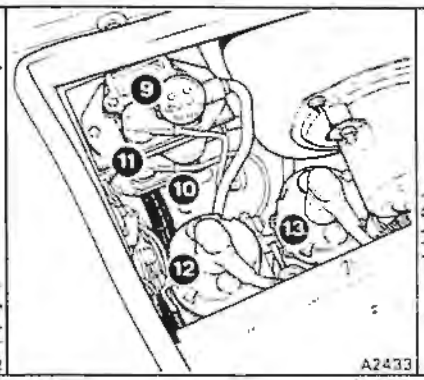

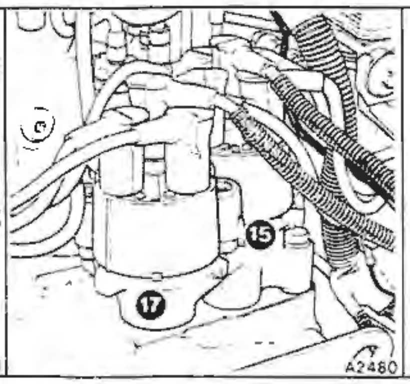

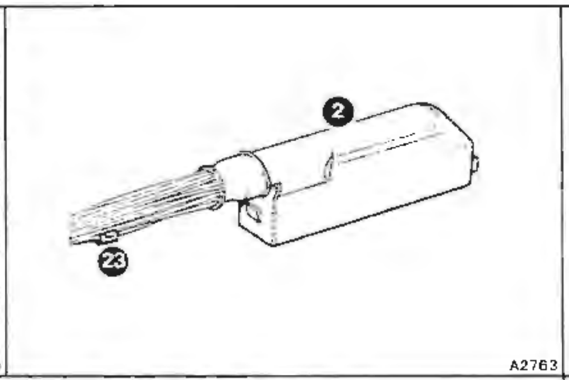

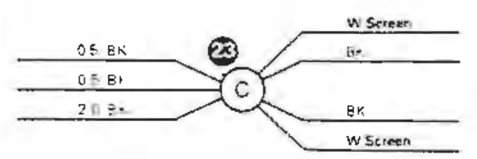

1	K-Motronic ECU
2	K-Motronic ECU multiple plug
3	Parameter code socket (link only required on cars not fitted with catalytic converters)
4	Fuse B3, fuse board 1 (15 amp)
5	Splice A
6	Main loom to valance loom plug and socket 7-way – right-hand 'A' Post
7	Valance loom to engine loom plug and socket 7-way – right-hand side
8	Splice B
9	Ignition driver module – group 1
10	Ignition driver module – group 2
11	Earth
12	Ignition coil – group 2
13	Ignition coil – group 1
14	Sparking plugs
15	Ignition distributor – group 2
16	Earth-crankcase
17	Ignition distributor – group 1
18	Ignition reference sensor 3-way plug and socket
19	Crankshaft reference sensor (ignition)
20	Earth
21	Engine speed sensor 3-way plug and socket
22	Engine speed sensor
23	Splice C
24	Earth

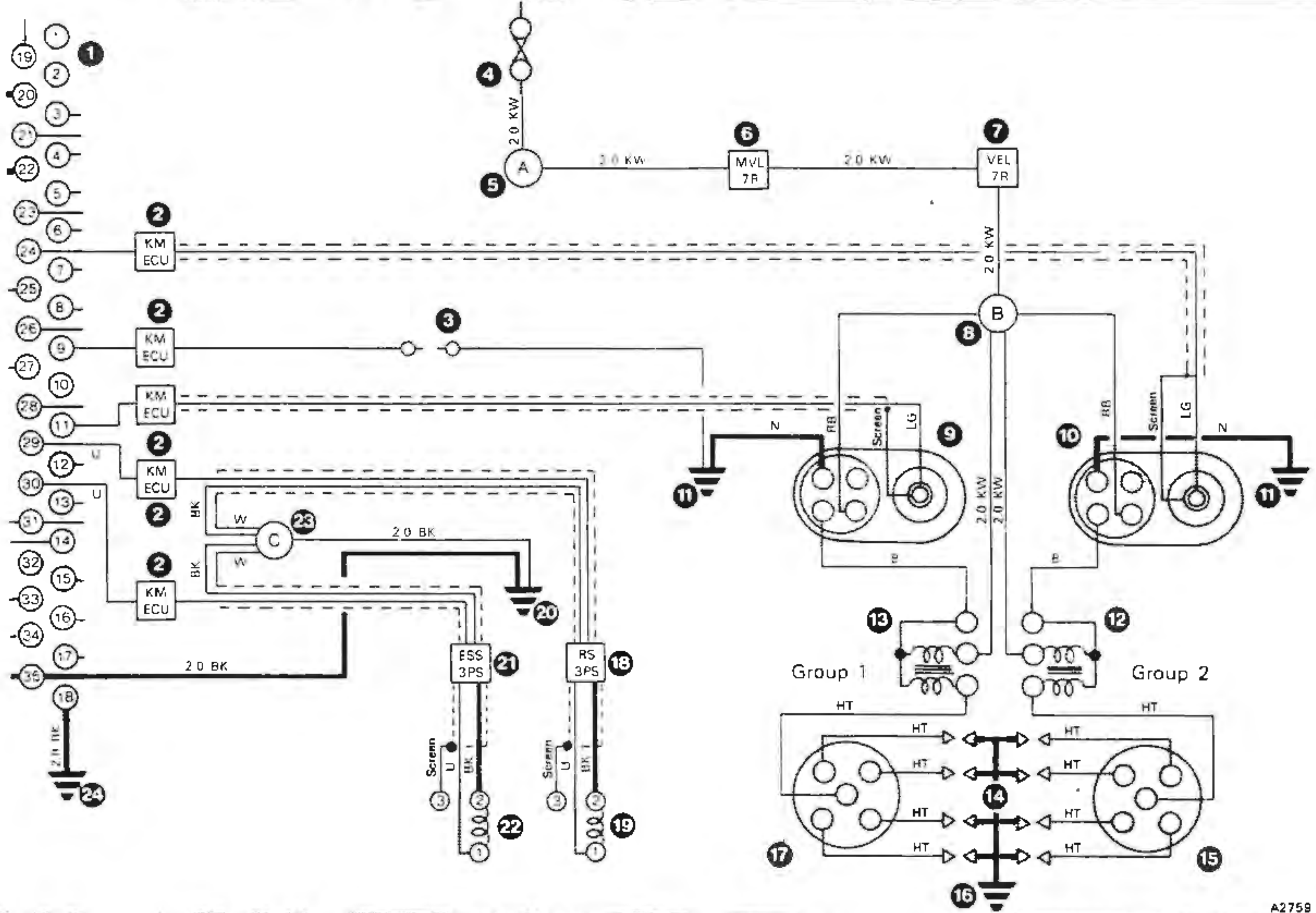

Right-hand drive cars

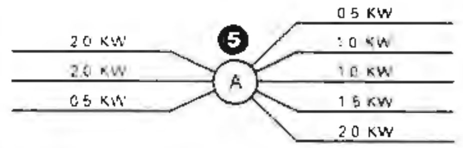

Left-hand drive cars

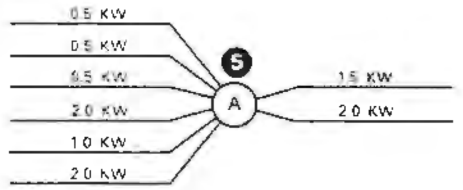

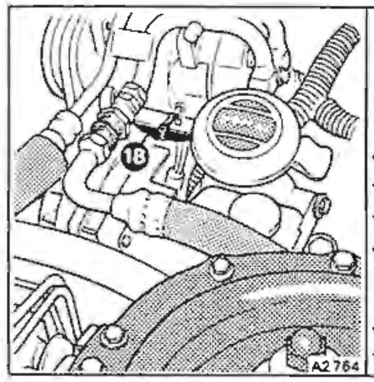

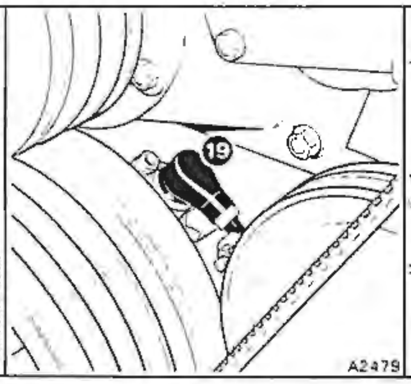

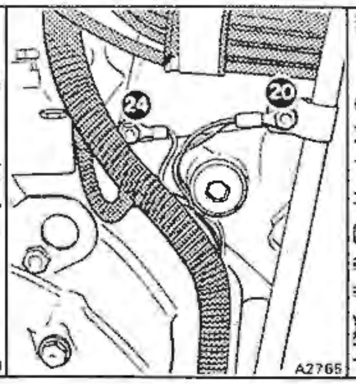

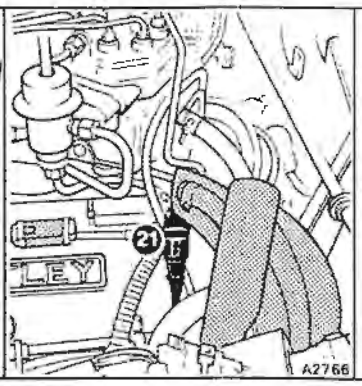

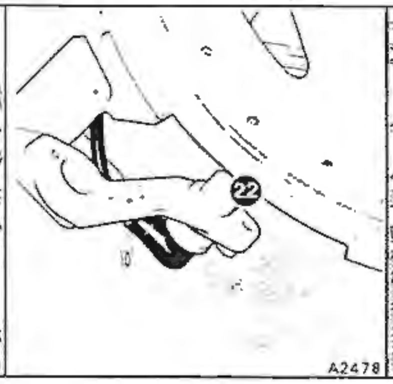

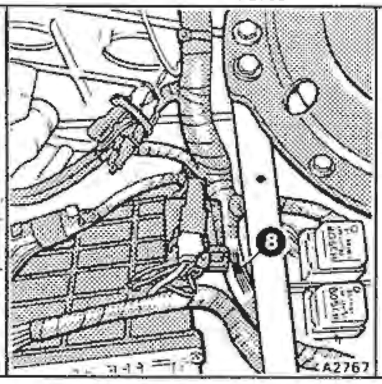

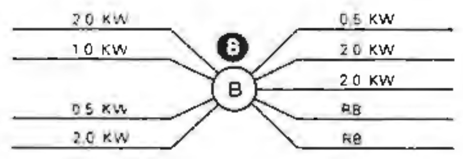

Figure B4-57

Bosch EZ 58F digital ignition system – test programme

Sheet 2 of 3

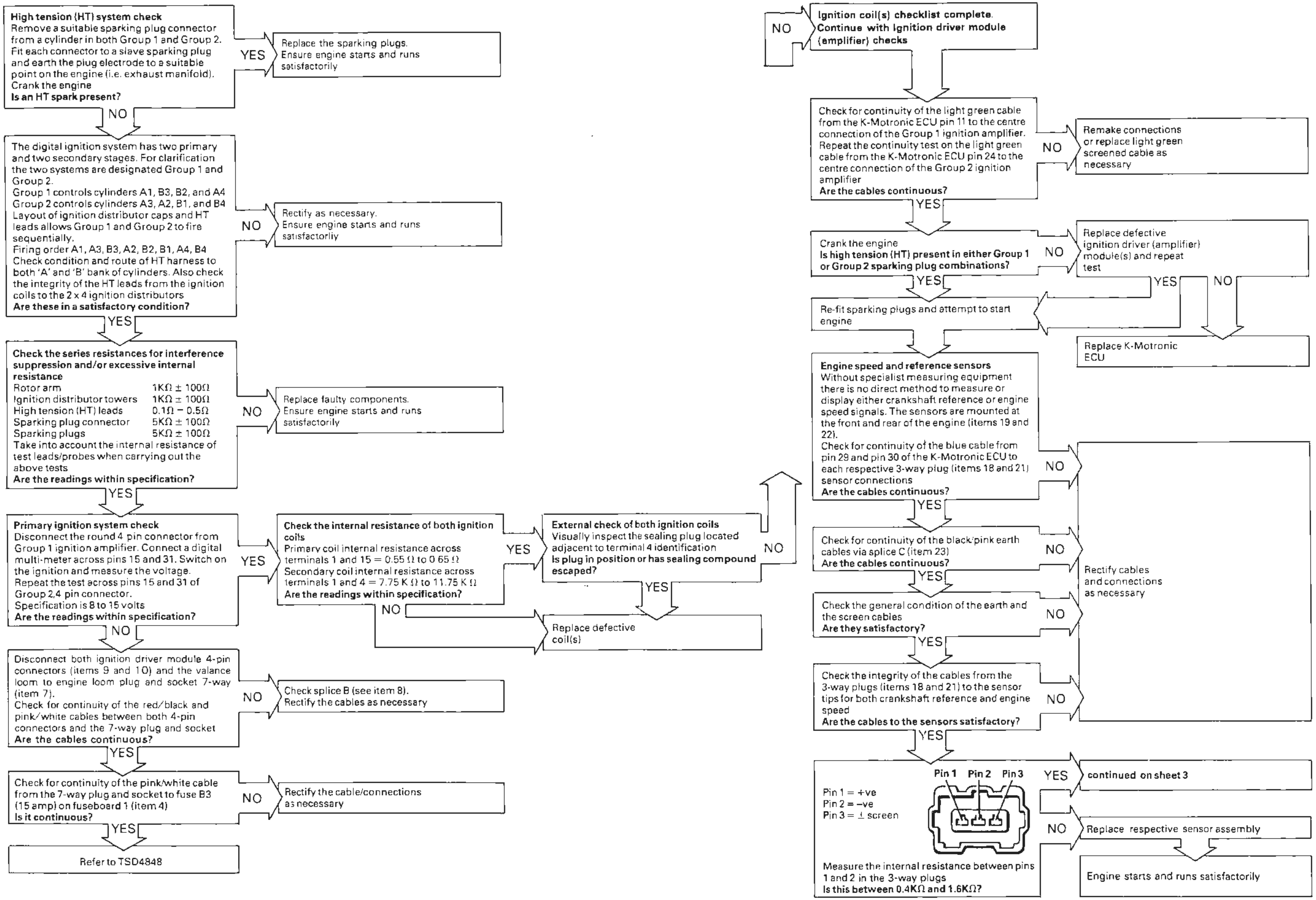

High tension (HT) system check
Remove a suitable sparking plug connector from a cylinder in both Group 1 and Group 2. Fit each connector to a slave sparking plug and earth the plug electrode to a suitable point on the engine (i.e. exhaust manifold). Crank the engine
Is an HT spark present?

Replace the sparking plugs. Ensure engine starts and runs satisfactorily

The digital ignition system has two primary and two secondary stages. For clarification the two systems are designated Group 1 and Group 2.
Group 1 controls cylinders A1, B3, B2, and A4
Group 2 controls cylinders A3, A2, B1, and B4
Layout of ignition distributor caps and HT leads allows Group 1 and Group 2 to fire sequentially.
Firing order A1, A3, B3, A2, B2, B1, A4, B4
Check condition and route of HT harness to both 'A' and 'B' bank of cylinders. Also check the integrity of the HT leads from the ignition coils to the 2 x 4 ignition distributors
Are these in a satisfactory condition?

Rectify as necessary. Ensure engine starts and runs satisfactoriiy

Check the series resistances for interference suppression and/or excessive internal resistance

Rotor arm	1KΩ ± 100Ω
Ignition distributor towers	1KΩ ± 100Ω
High tension (HT) leads	0.1Ω – 0.5Ω
Sparking plug connector	5KΩ ± 100Ω
Sparking plugs	5KΩ ± 100Ω

Take into account the internal resistance of test leads/probes when carrying out the above tests
Are the readings within specification?

Replace faulty components. Ensure engine starts and runs satisfactorily

Primary ignition system check
Disconnect the round 4 pin connector from Group 1 ignition amplifier. Connect a digital multi-meter across pins 15 and 31. Switch on the ignition and measure the voltage.
Repeat the test across pins 15 and 31 of Group 2,4 pin connector.
Specification is 8 to 15 volts
Are the readings within specification?

Check the internal resistance of both ignition coils
Primary coil internal resistance across terminals 1 and 15 = 0.55 Ω to 0 65 Ω
Secondary coil internal resistance across terminals 1 and 4 = 7.75 K Ω to 11.75 K Ω
Are the readings within specification?

External check of both ignition coils
Visually inspect the sealing plug located adjacent to terminal 4 identification
Is plug in position or has sealing compound escaped?

Replace defective coil(s)

Disconnect both ignition driver module 4-pin connectors (items 9 and 10) and the valance loom to engine loom plug and socket 7-way (item 7).
Check for continuity of the red/black and pink/white cables between both 4-pin connectors and the 7-way plug and socket
Are the cables continuous?

Check splice B (see item 8).
Rectify the cables as necessary

Check for continuity of the pink/white cable from the 7-way plug and socket to fuse B3 (15 amp) on fuseboard 1 (item 4)
Is it continuous?

Rectify the cable/connections as necessary

Refer to TSD4848

Ignition coil(s) checklist complete.
Continue with Ignition driver module (amplifier) checks

Check for continuity of the light green cable from the K-Motronic ECU pin 11 to the centre connection of the Group 1 ignition amplifier.
Repeat the continuity test on the light green cable from the K-Motronic ECU pin 24 to the centre connection of the Group 2 ignition amplifier
Are the cables continuous?

Remake connections or replace light green screened cable as necessary

Crank the engine
Is high tension (HT) present in either Group 1 or Group 2 sparking plug combinations?

Replace defective ignition driver (amplifier) module(s) and repeat test

Re-fit sparking plugs and attempt to start engine

Replace K-Motronic ECU

Engine speed and reference sensors
Without specialist measuring equipment there is no direct method to measure or display either crankshaft reference or engine speed signals. The sensors are mounted at the front and rear of the engine (items 19 and 22).
Check for continuity of the blue cable from pin 29 and pin 30 of the K-Motronic ECU to each respective 3-way plug (items 18 and 21) sensor connections
Are the cables continuous?

Rectify cables and connections as necessary

Check for continuity of the black/pink earth cables via splice C (item 23)
Are the cables continuous?

Check the general condition of the earth and the screen cables
Are they satisfactory?

Check the integrity of the cables from the 3-way plugs (items 18 and 21) to the sensor tips for both crankshaft reference and engine speed
Are the cables to the sensors satisfactory?

Pin 1 = +ve
Pin 2 = –ve
Pin 3 = ⊥ screen

Measure the internal resistance between pins 1 and 2 in the 3-way plugs
Is this between 0.4KΩ and 1.6KΩ?

continued on sheet 3

Replace respective sensor assembly

Engine starts and runs satisfactorily

Figure B4-57

Bosch EZ 58F digital ignition system – test programme

Sheet 3 of 3

Printed in England

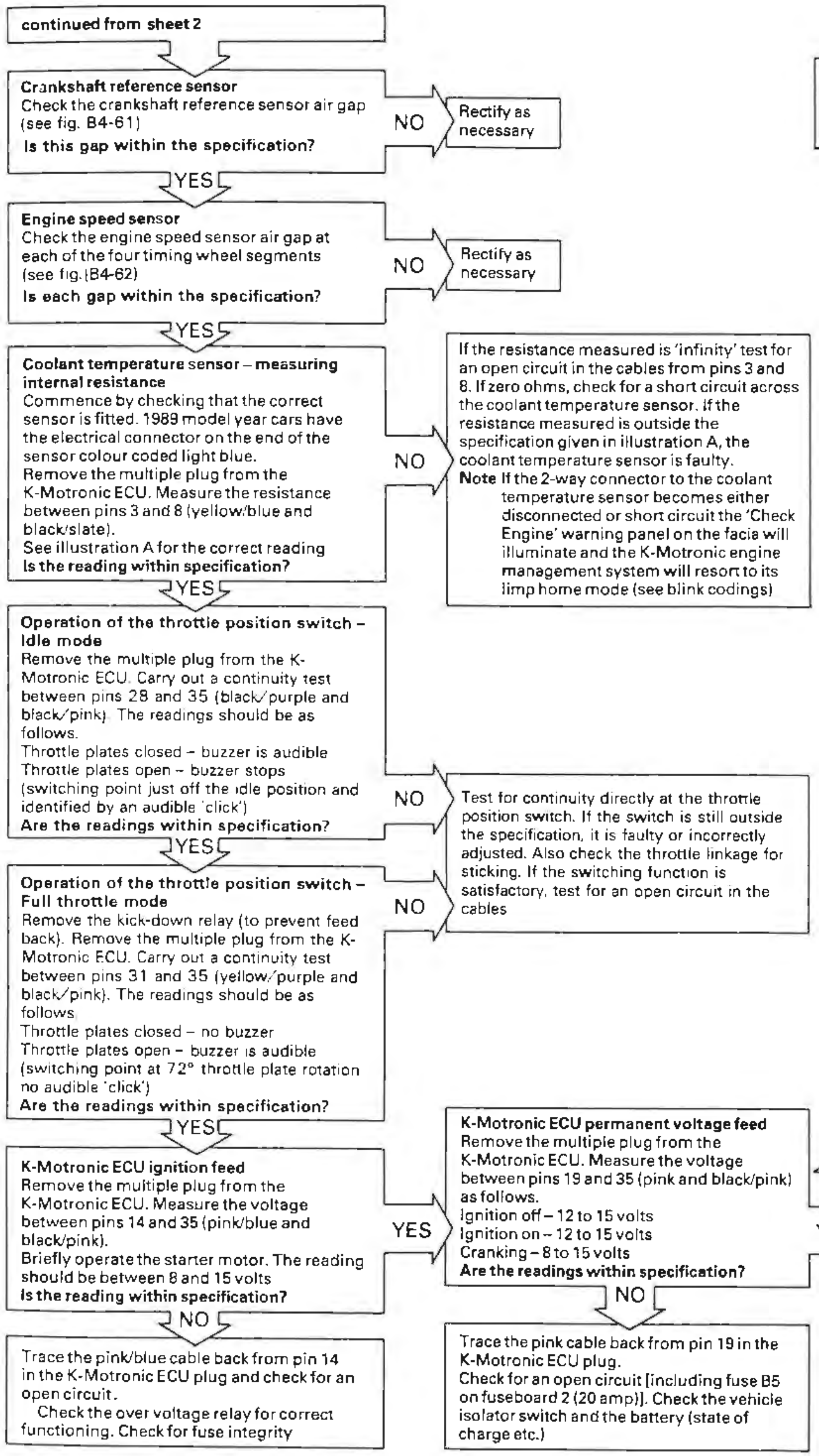

continued from sheet 2

Crankshaft reference sensor
Check the crankshaft reference sensor air gap (see fig. B4-61)
Is this gap within the specification?

NO: Rectify as necessary

YES:

Engine speed sensor
Check the engine speed sensor air gap at each of the four timing wheel segments (see fig. (B4-62)
Is each gap within the specification?

NO: Rectify as necessary

YES:

Coolant temperature sensor – measuring internal resistance
Commence by checking that the correct sensor is fitted. 1989 model year cars have the electrical connector on the end of the sensor colour coded light blue.
Remove the multiple plug from the K-Motronic ECU. Measure the resistance between pins 3 and 8 (yellow/blue and black/slate).
See illustration A for the correct reading
Is the reading within specification?

NO: If the resistance measured is 'infinity' test for an open circuit in the cables from pins 3 and 8. If zero ohms, check for a short circuit across the coolant temperature sensor. If the resistance measured is outside the specification given in illustration A, the coolant temperature sensor is faulty.
Note If the 2-way connector to the coolant temperature sensor becomes either disconnected or short circuit the 'Check Engine' warning panel on the facia will illuminate and the K-Motronic engine management system will resort to its limp home mode (see blink codings)

YES:

Operation of the throttle position switch – Idle mode
Remove the multiple plug from the K-Motronic ECU. Carry out a continuity test between pins 28 and 35 (black/purple and black/pink). The readings should be as follows.
Throttle plates closed – buzzer is audible
Throttle plates open – buzzer stops
(switching point just off the idle position and identified by an audible 'click')
Are the readings within specification?

NO: Test for continuity directly at the throttle position switch. If the switch is still outside the specification, it is faulty or incorrectly adjusted. Also check the throttle linkage for sticking. If the switching function is satisfactory, test for an open circuit in the cables

YES:

Operation of the throttle position switch – Full throttle mode
Remove the kick-down relay (to prevent feed back). Remove the multiple plug from the K-Motronic ECU. Carry out a continuity test between pins 31 and 35 (yellow/purple and black/pink). The readings should be as follows
Throttle plates closed – no buzzer
Throttle plates open – buzzer is audible
(switching point at 72° throttle plate rotation no audible 'click')
Are the readings within specification?

NO:

YES:

K-Motronic ECU ignition feed
Remove the multiple plug from the K-Motronic ECU. Measure the voltage between pins 14 and 35 (pink/blue and black/pink).
Briefly operate the starter motor. The reading should be between 8 and 15 volts
Is the reading within specification?

NO: Trace the pink/blue cable back from pin 14 in the K-Motronic ECU plug and check for an open circuit.
Check the over voltage relay for correct functioning. Check for fuse integrity

YES:

K-Motronic ECU permanent voltage feed
Remove the multiple plug from the K-Motronic ECU. Measure the voltage between pins 19 and 35 (pink and black/pink) as follows.
Ignition off – 12 to 15 volts
Ignition on – 12 to 15 volts
Cranking – 8 to 15 volts
Are the readings within specification?

NO: Trace the pink cable back from pin 19 in the K-Motronic ECU plug.
Check for an open circuit [including fuse B5 on fuseboard 2 (20 amp)]. Check the vehicle isolator switch and the battery (state of charge etc.)

YES:

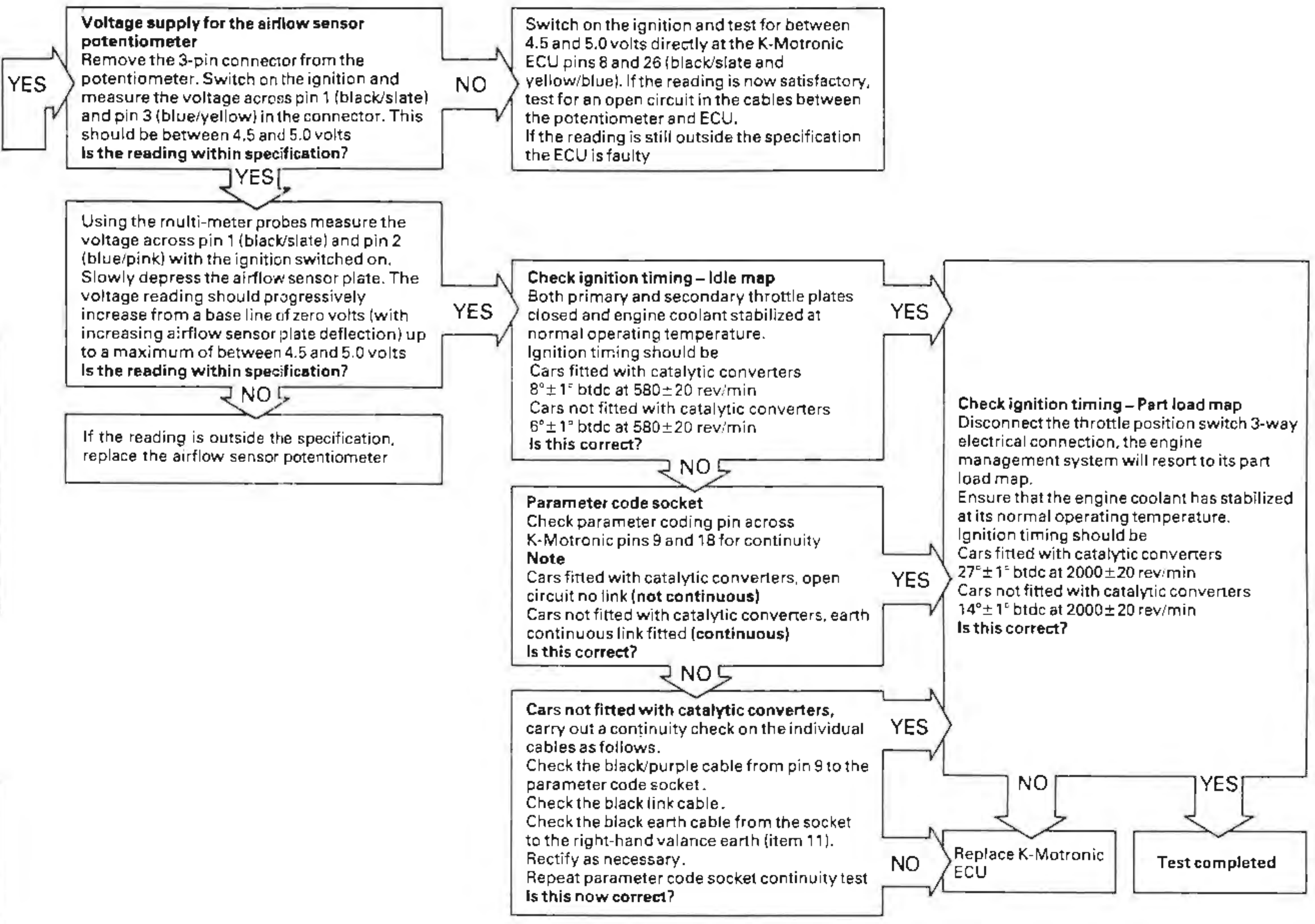

Voltage supply for the airflow sensor potentiometer
Remove the 3-pin connector from the potentiometer. Switch on the ignition and measure the voltage across pin 1 (black/slate) and pin 3 (blue/yellow) in the connector. This should be between 4.5 and 5.0 volts
Is the reading within specification?

NO: Switch on the ignition and test for between 4.5 and 5.0 volts directly at the K-Motronic ECU pins 8 and 26 (black/slate and yellow/blue). If the reading is now satisfactory, test for an open circuit in the cables between the potentiometer and ECU.
If the reading is still outside the specification the ECU is faulty

YES:

Using the multi-meter probes measure the voltage across pin 1 (black/slate) and pin 2 (blue/pink) with the ignition switched on. Slowly depress the airflow sensor plate. The voltage reading should progressively increase from a base line of zero volts (with increasing airflow sensor plate deflection) up to a maximum of between 4.5 and 5.0 volts
Is the reading within specification?

NO: If the reading is outside the specification, replace the airflow sensor potentiometer

YES:

Check ignition timing – Idle map
Both primary and secondary throttle plates closed and engine coolant stabilized at normal operating temperature.
Ignition timing should be
Cars fitted with catalytic converters
8°±1° btdc at 580±20 rev/min
Cars not fitted with catalytic converters
6°±1° btdc at 580±20 rev/min
Is this correct?

YES: Part load map (below)

NO:

Parameter code socket
Check parameter coding pin across K-Motronic pins 9 and 18 for continuity
Note
Cars fitted with catalytic converters, open circuit no link **(not continuous)**
Cars not fitted with catalytic converters, earth continuous link fitted **(continuous)**
Is this correct?

YES: Part load map (below)

NO:

Cars not fitted with catalytic converters, carry out a continuity check on the individual cables as follows.
Check the black/purple cable from pin 9 to the parameter code socket.
Check the black link cable.
Check the black earth cable from the socket to the right-hand valance earth (item 11).
Rectify as necessary.
Repeat parameter code socket continuity test
Is this now correct?

NO: Replace K-Motronic ECU

YES:

Check ignition timing – Part load map
Disconnect the throttle position switch 3-way electrical connection, the engine management system will resort to its part load map.
Ensure that the engine coolant has stabilized at its normal operating temperature.
Ignition timing should be
Cars fitted with catalytic converters
27°±1° btdc at 2000±20 rev/min
Cars not fitted with catalytic converters
14°±1° btdc at 2000±20 rev/min
Is this correct?

NO: Replace K-Motronic ECU

YES: Test completed

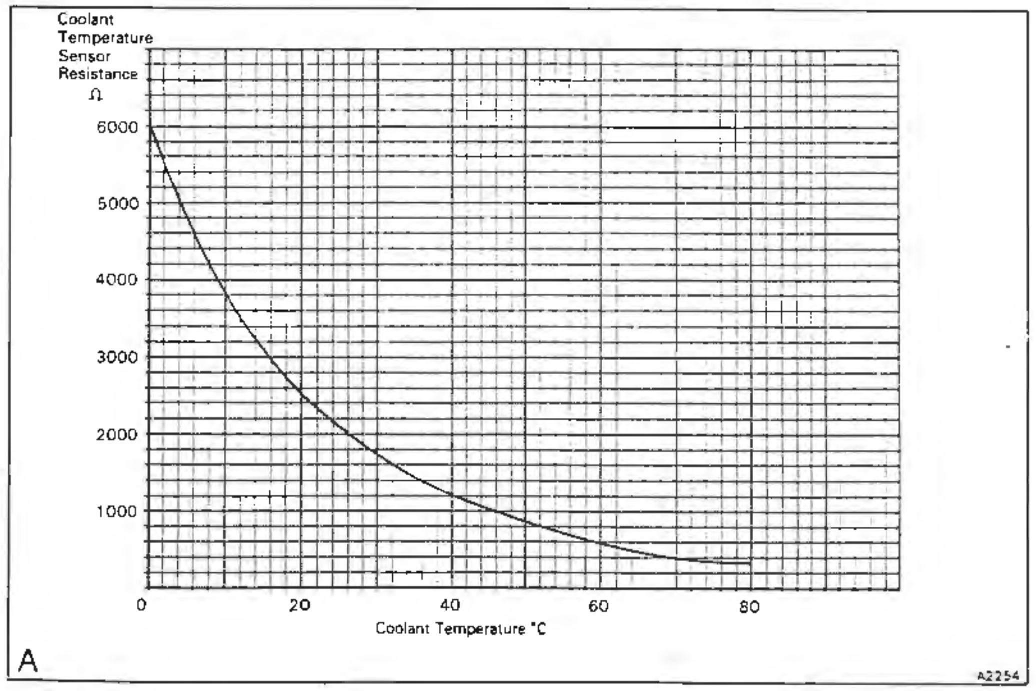

can be achieved by unscrewing the mounting screws and lifting the module from the mounting bracket.

If however, the lower driver module or both modules are to be removed, this is best achieved by removing the screws that retain the mounting bracket to the bulkhead. The mounting bracket with both modules attached can then be withdrawn as an assembly.

4. Fit the modules by reversing the procedure, noting that each module should be fitted with the thin clear film still in position on the base of the unit.

Non-silicone heat transfer compound (HTC 700G) should be applied across the back face of the mounting bracket.

Ignition coil(s) - To remove and fit
(see figs. B4-58 and B4-59)

1. Carry out the usual workshop safety precautions.
2. Label all cables fitted to the coils to assist identification upon assembly. Note the route each cable takes.
3. Withdraw the high tension (HT) cable from the centre of each coil.
4. Withdraw the plastic protective cover from the top of each coil. These covers clip into position and can be difficult to remove.
5. Unscrew the retaining nuts and remove the cables from the positive and negative terminals of each coil (see fig. B4-58).
6. Locate the two setscrews in the rear section of the front right-hand wing. These screws retain the mounting bracket for the coils (see fig. B4-59). Unscrew the setscrews and carefully withdraw both coils and mounting bracket as one assembly.
7. Fit the coils by reversing the removal procedure. Ensure the cables are positioned as found (see Operation 2). Badly routed cables can cause interference with other signals.

Ignition distributors - To remove and fit

1. Carry out the usual workshop safety precautions.
2. Make note of the cable runs from the distributor caps to the sparking plugs. This is to facilitate assembly.
3. Withdraw the cable connectors from the sparking plugs and free the leads from the guide clips on the engine rocker covers.
4. Unscrew the setscrew and release the metal guide clip from the rear of each cylinder head.
5. Free the ignition coil high tension (HT) lead from the centre of each distributor cap. This can be achieved by firmly grasping the cable connector where it enters the distributor cap and whilst twisting the connector carefully pull it upwards. Do not pull the cable.
6. Slacken the two securing screws retaining each distributor cap. Turn each shaped securing stud to free it from the distributor base. Carefully withdraw each cap in an upwards direction.
7. Turn the engine in the direction of rotation until the distributor rotor arms point in the direction shown in figure B4-60. Also ensure that the timing pointer is aligned with the TDC mark on the front damper assembly.

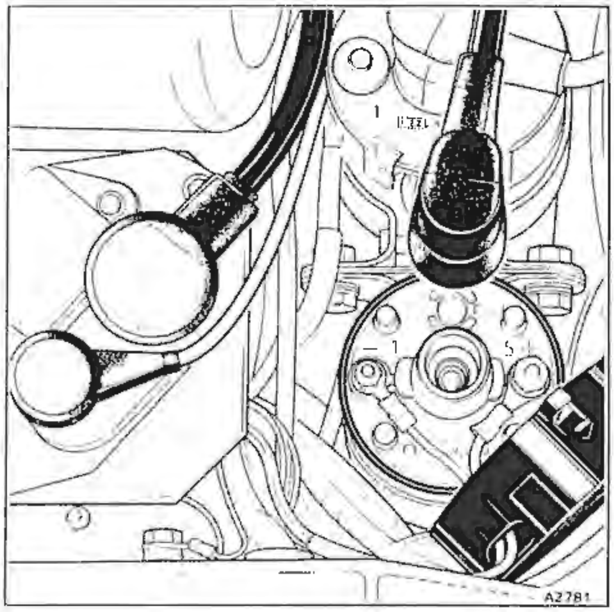

Fig. B4-58 Ignition driver modules (amplifiers) and coils

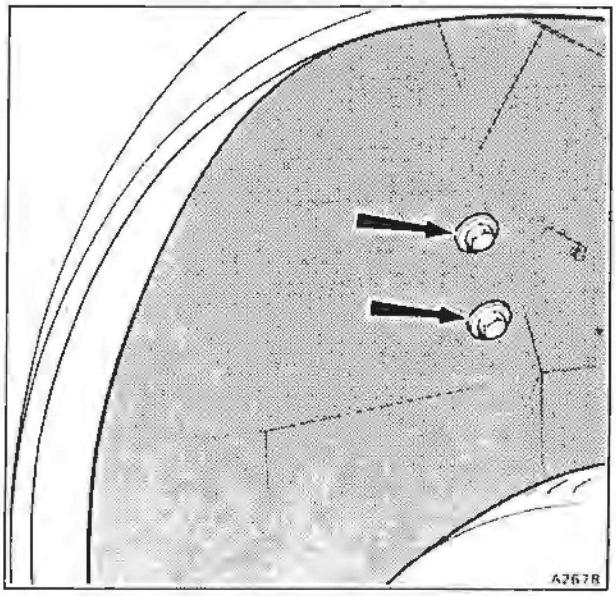

Fig. B4-59 Ignition coils mounting bracket retaining screws

8. Unscrew the main distributor base assembly securing setscrew and lift the base from the crankcase.
9. To fit the distributor assembly reverse the dismantling procedure noting the following points.

Ensure that when the distributor assembly is fitted, the centre of the rotor arms align with the timing marks (see fig. B4-60) at TDC, with A1 cylinder on its firing stroke.

Ensure that the rubber sealing ring fitted around the distributor pedestal is in good condition and lubricated with Palmolive grease or its equivalent.

Ensure that the base assembly securing setscrew is not overtightened.

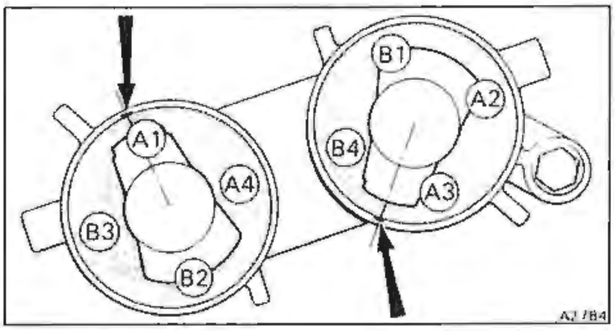

Fig. B4-60 Position of distributor rotor arms

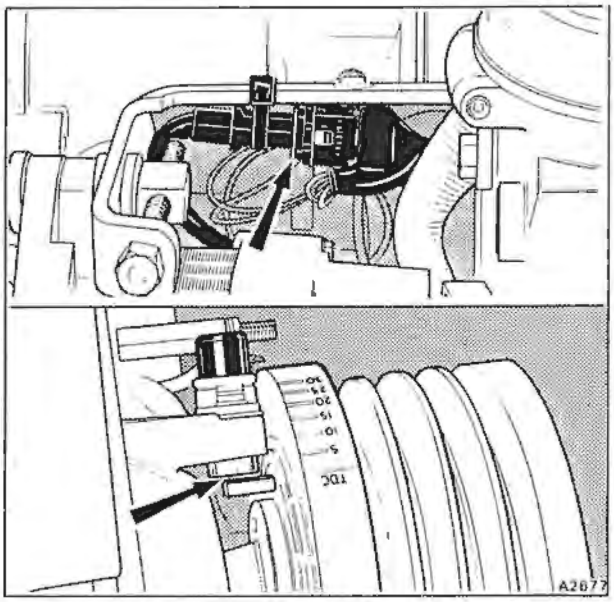

Fig. B4-61 Crankshaft reference sensor air gap

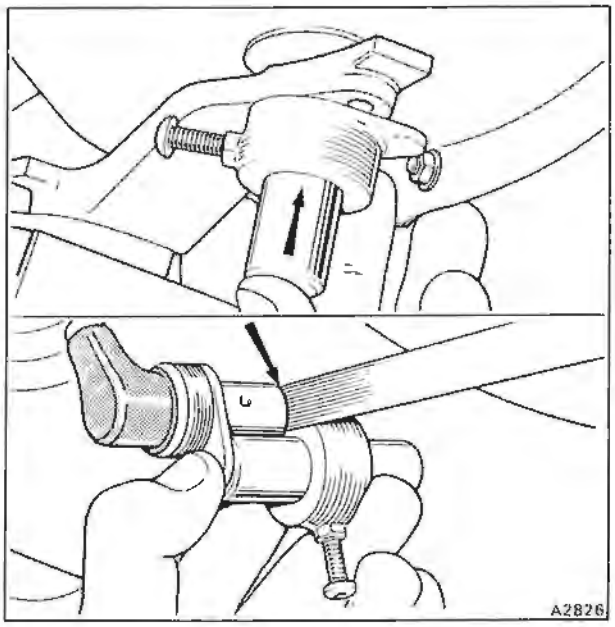

Fig. B4-62 Engine speed sensor air gap

Ensure that each distributor cap is correctly located in its base before securing it with the two screws.

The ignition timing is pre-programmed and is not adjustable. Under no circumstances must any attempt be made to rotate the ignition distributor housing.

Crankshaft reference sensor - To remove and fit (see fig. B4-61)
Under no circumstances must the sensor be dropped onto or knocked against a hard surface.

1. Carry out the usual workshop safety precautions.
2. Note the run of the sensor cable and where it is secured by plastic Insulok clips. This is to facilitate assembly.
3. Disconnect the 3-way connector (see fig. B4-57, item 18).
4. Cut the plastic Insulok clips and free the cable.
5. Unscrew the Allen screw securing the sensor assembly to the front cover.
6. Withdraw the sensor and collect any shims fitted between the assembly and the front cover.
7. Ensure that the sensor trigger pin fitted into the rear face of the damper assembly is clean.
8. Fit the sensor by reversing the removal procedure.
9. Using **stainless steel** feeler gauges measure the air gap between the trigger pin and the sensor. This gap should be between 0,89 mm and 1,27 mm (0.035 in and 0.050 in). Adjust the gap as necessary by means of shim washers fitted between the sensor assembly and the front cover.
10. Check the run of the sensor cable. Note that the cable should be reasonably taut. Any free play in the cable must be clipped on the bracket adjacent to the 3-way connector situated on top of the engine.
11. Slowly rotate the engine to confirm that the sensor cable does not foul any moving parts (drive belts, crankshaft damper, pulley, etc.).
12. Check the ignition timing making reference to figure B4-57, Electrical test programme.

Engine speed sensor - To remove and fit (see fig. B4-62)
Under no circumstances must the sensor be dropped onto or knocked against a hard surface.

1. Carry out the usual workshop safety precautions.
2. Note the run of the sensor cable and where it is secured by plastic Insulok clips. This is to facilitate assembly.
3. Disconnect the 3-way connector (see fig. B4-57, item 21).
4. Cut the plastic Insulok clips and free the cable.
5. Unscrew the setscrew securing the sensor to its mounting bracket.
6. Withdraw the sensor. Collect any shims that may be fitted between the sensor and the mounting bracket.
7. Ensure that one of the segments is in line with the sensor hole in the bottom cover.
8. Fit the setting tool RH 12207 through the hole. Ensure that the collar/plate assembly of the setting tool sits on the sensor mounting bracket and that the depth pillar is pushed firmly into contact with the segment (see fig. B4-62). Tighten the locking screw.
9. Withdraw the setting tool and place it against the

sensor (see fig. B4-62).

10. Using **stainless steel** feeler gauges measure the air gap between the end of the sensor and the collar/plate assembly on the setting tool. This gap should be between 0,89 mm and 1,27 mm (0.035 in and 0.050 in). Adjust the gap as necessary by means of shim washers fitted between the sensor and its mounting bracket.

11. Repeat the air gap measuring technique on all four segments.

12. Ensure that the rubber grommet fitted into the bottom cover is in good condition.

13. Fit the sensor (and any shims) to the mounting bracket. Ensure that the sensor fits correctly through the rubber grommet.

14. Check the route of the sensor cable. Note that the cable should be reasonably taut. Any free play in the cable must be clipped at the top of the engine.

15. Check the sensor and the ignition timing, making reference to figure B4-57, Electrical test programme.

Chapter C

Fuel system

Contents

Issue record sheet

The dates quoted below refer to the issue date of individual pages within this chapter.

Sections	C1	C2								
Page No.										
1	5/88	4/89								
2		5/88								
3	4/89	5/88								
4		5/88								
5		5/88								
6		10/88								
7		5/88								
8		10/88								
9										
10										
11										
12										
13										
14										
15										
16										
17										
18										
19										
20										
21										
22										
23										
24										
25										
26										
27										
28										
29										
30										
31										
32										
33										
34										
35										
36										
37										
38										
39										
40										
41										
42										
43										
44										
45										
46										
47										
48										
49										
50										
51										
52										
53										
54										

Printed in England

Fuel system

The fuel system is of the recirculating type as shown in figure C2-1. Excess fuel not required by the engine is returned to the fuel tank.

For information relating to the fuel evaporative emission control system, refer to Chapter G.

Depressurizing the fuel system
The fuel in the system may be pressurized, except for the fuel tank and return lines. Therefore, it is recommended that the fuel system be depressurized before dismantling any parts of the system.

To depressurize the system proceed as follows.

1. Clean the inlet connection to the fuel filter.
2. Wrap an absorbent cloth around the joint and carefully slacken the pipe nut to release any pressurized fuel from the system.
3. Tighten the pipe nut.
4. It should be noted that the system will still contain unpressurized fuel.
5. After working on the system, run the engine and check to ensure that there are no leaks.

Water contamination of the fuel
If the fuel system becomes contaminated, it is recommended that the following procedure is adopted to remove the water.

1. Detach the fuel return pipe from either the fuel distributor (naturally aspirated cars) or the lower connection of the fuel pressure regulator (turbocharged cars).
2. Blow compressed air into the fuel return line to force any fuel into the tank.
3. Slightly jack-up the car on the right-hand side and siphon the fuel from the fuel tank. Lower the jack.
4. Pour 4,5 litres (1 Imp gal, 1.2 US gal) of Exxonvarsol or Shell Mineral spirit 135 (white spirit) into the fuel tank and rock the car from side to side. This will thoroughly mix the spirit with any water remaining in the tank.
5. Slightly jack-up the car on the right-hand side and siphon the fuel tank. Lower the jack.
6. Repeat Operations 4 and 5 until all the water has been removed from the fuel tank.
7. Disconnect and insulate the electrical leads from the fuel tank pre-pump. Unscrew the worm drive clip securing the fuel feed hose and detach the hose.
8. Remove the locking ring from the base of the fuel tank using the special tool RH 9928. Withdraw the pre-pump assembly and discard the sealing ring.
9. Fit a new pre-pump assembly, noting the following.

a. Ensure that the pre-pump filter sock is not deformed in any way and ensure that the sock support spring is fitted.

b. Ensure that a new sealing ring is fitted.

c. Secure the assembly with the locking ring using the special tool RH 9928.

d. Ensure that the lug on the locking ring just contacts the stop on the tank outlet. **Do not overtighten.**

e. Do not connect the electrical leads to the pre-pump (ensure that the leads are insulated).

10. Detach the hose from the main fuel pump inlet connection.

Connect a length of hose, approximately 2 m (6 ft) in length to the fuel pump inlet. Place the other end of the hose in a suitable clean container of at least 2,3 litres (4 Imp pt, 4.8 US pt) capacity.

11. Connect another length of hose, approximately 2 m (6 ft) in length to the fuel distributor return pipe disconnected in Operation 1. Place the free end of the hose into an empty container of at least 5 litres (1.1 Imp gal, 1.3 US gal) capacity.
12. Fit a new fuel filter assembly.
13. Remove the fuel injectors and fuel injection lines.
14. Remove the air intake ducting (refer to Chapter J).
15. Detach the electrical plug from the pressure control valve (if fitted).
16. Connect the eight auxiliary plastic fuel lines from the fuel delivery quantity comparison tester RH 9613 (Bosch No. KDJE 7455) to the fuel injection line connections on the fuel distributor. Place the free ends of the plastic fuel lines into the empty container.
17. Pour at least 2,3 litres (4 Imp pt, 4.8 US pt) of mineral spirit into the container feeding the fuel pump.
18. Operate the main fuel pump (refer to the appropriate section within Chapter B). **Do not allow the fuel pump to run dry.**
19. Press the air flow sensor plate downwards to its maximum open position.
20. Continue to flush the system through until the mineral spirit runs clean.
21. Test the fuel injectors (refer to Chapter B).
22. Fit the fuel injectors and injector lines.
23. Fit a new fuel filter assembly.
24. Remove the two auxiliary hoses, refer to Operations 10 and 11.
25. Fit the fuel return pipe, refer to Operation 1.
26. Fit the hose from the fuel tank to the fuel pump inlet connection.
27. Connect the electrical leads to the fuel tank pre-pump.
28. Add fuel to the tank and test the engine.

Removal and fitting of components

Before dismantling connections and removing components always depressurize the system. Ensure that any open connections are blanked off to prevent the ingress of dirt.

Fuel tank (see figs. C2-1 and C2-6)
The fuel tank is fitted at the forward end of the luggage

compartment behind the carpet covered sealing panel.

A small expansion tank having a capacity of approximately 3 litres (5.5 Imp pts, 7 US pts) is situated within the main fuel tank to inhibit complete filling. This provides fuel expansion volume to cope with extreme temperature conditions.

When the car is being filled with fuel, the main fuel tank (without an expansion tank) could normally be completely filled, leaving only the filler neck and vent connector pipes to accommodate the expansion of the fuel. Therefore, an expansion tank is situated in the upper part of the main fuel tank and as the fuel level rises above the lower part of the expansion tank it flows inside through two small holes in the base. Two additional holes in the top of the expansion tank allow air to escape.

Fuel tank – To remove

1. Carry out the necessary workshop safety precautions (refer to Chapter A).
2. Disconnect and remove the battery.
3. Siphon the fuel from the tank.
4. Unscrew the Pozidriv screws from the panel at the forward end of the luggage compartment and remove the knob from the battery master switch (if fitted).
5. Withdraw the panel to reveal the fuel tank. On 2 door cars, disconnect the electrical cables from the luggage compartment lamp and the centralized door locking switch.
6. Disconnect the three electrical cables from the fuel tank level gauge. Remove the tape securing the loom to the fuel tank.
7. Remove the clips securing the three fuel tank vent hoses to their respective connections on top of the tank.
8. Withdraw the hoses and blank the open connections.
9. Unscrew the worm drive clip securing the filler hose to the fuel tank. Free the hose and blank off the open connection.
10. From beneath the car, detach the fuel feed and return connections at the fuel tank. Blank off the open connections. Disconnect and insulate the electrical cables from the pre-pump.
11. Disconnect the rollover tube at the hose connection on the left-hand side of the fuel tank. Slacken the two tube retaining clips on the luggage compartment floor. Free the rollover tube from the Insulok plastic clip situated on either side of the tank.
12. Turn the rollover tube in the retaining clips so that

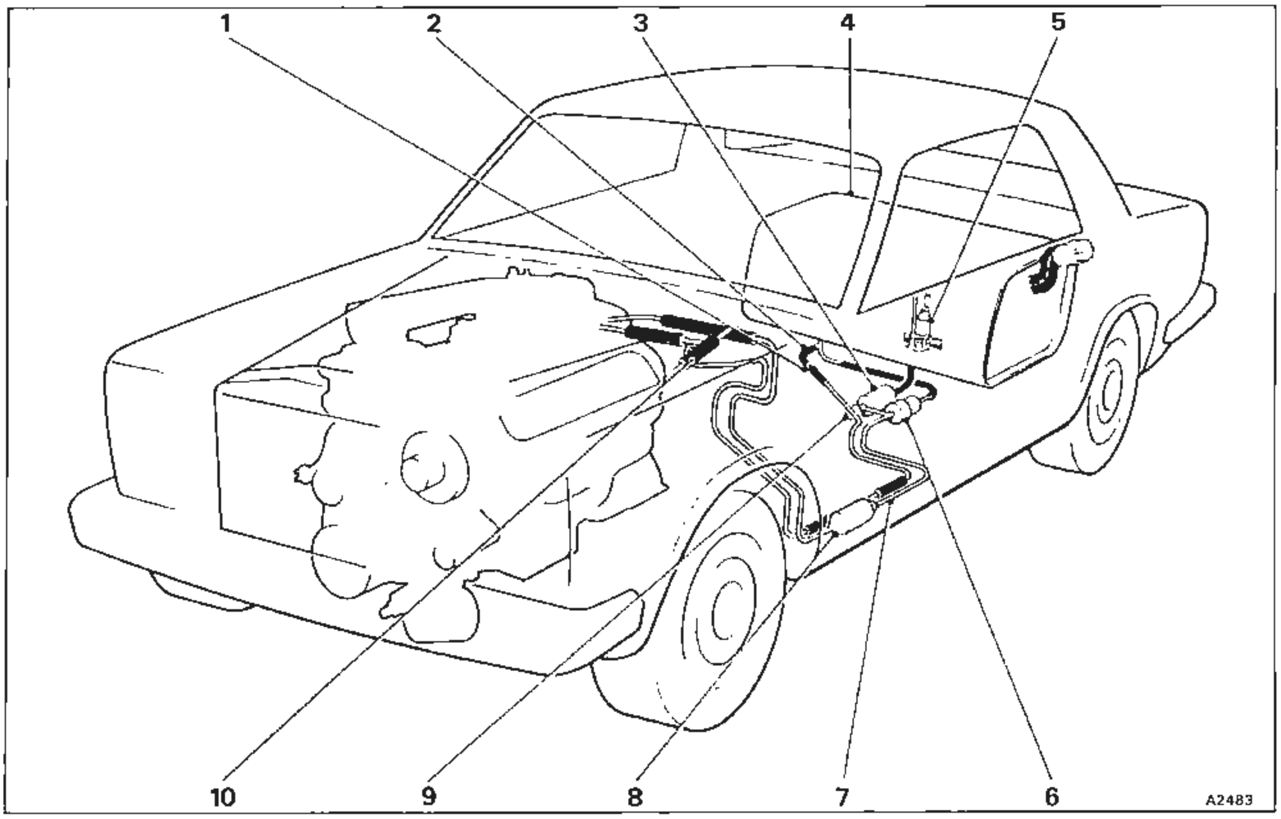

Fig. C2-1 Fuel system layout

1 Non-return valve
2 Fuel return line
3 Fuel pump
4 Fuel tank
5 In-tank pre-pump
6 Fuel accumulator
7 Fuel supply line
8 Fuel filter
9 Fuel pressure damper
10 Fuel cooler

it lies on the luggage compartment floor.

13. Unlock and unscrew the half-nut from each of the tank retaining strap bolts.

14. Unscrew the full nut from each of the two tank retaining strap bolts.

15. Withdraw the bolts and the crossmember (if fitted). Collect the four bridge pieces from the ends of the retaining straps.

16. Bend the retaining straps and carefully withdraw the fuel tank assembly.

Note The fuel tank may prove difficult to move due to the bonding effect that can take place between the rubber mountings and the tank after a period of time.

If an extra effort is required to free the tank, ensure that it will not be damaged by the force used.

Fuel tank – To fit

1. Ensure that the battery is removed and the necessary workshop safety precautions carried out (refer to Chapter A).

2. Clean the forward area of the luggage compartment.

If blanking plugs, nuts, washers, etc., remain in this area when the fuel tank is fitted, they could become the cause of noise which may prove difficult to eradicate once the fuel tank is in position.

3. Fit the fuel tank cushioning pad to the rear seat panel.

4. Ensure that the rubber blanking grommets are fitted, one into each of the forward corners of the luggage compartment floor.

5. Fit the rubber matting to the luggage compartment floor.

6. Fit the moulded rubber insulating pieces around the suspension pots and wheel arches.

7. Fit the two compriband pads around the large holes in the luggage compartment floor.

8. Fit the compriband covered wooden strip on the luggage compartment floor where it joins the rear seat panel.

Note The position of all pads and strips are illustrated in figures C2-2 and C2-3. All pads and strips should be secured in position using an appropriate adhesive (refer to TSD 4700, Chapter S).

9. Fit the fuel tank upper securing straps into position.

10. Fit the rollover tube, ensuring the uprights are turned to lie flat on the luggage compartment floor.

11. Ensure that the evaporative loss control hose (if fitted), is positioned correctly through the luggage compartment floor. Also, ensure that it is clipped above tank level in the left-hand luggage compartment hinge area.

12. Fit the long metal pipe and short hose across the top of the fuel tank, securing in position with clips.

13. Fit the fuel tank into position ensuring that the two bosses in the base of the assembly are positioned in the body holes.

14. Connect the vent hoses from both sides of the fuel tank to the filler assembly and tighten the retaining clips.

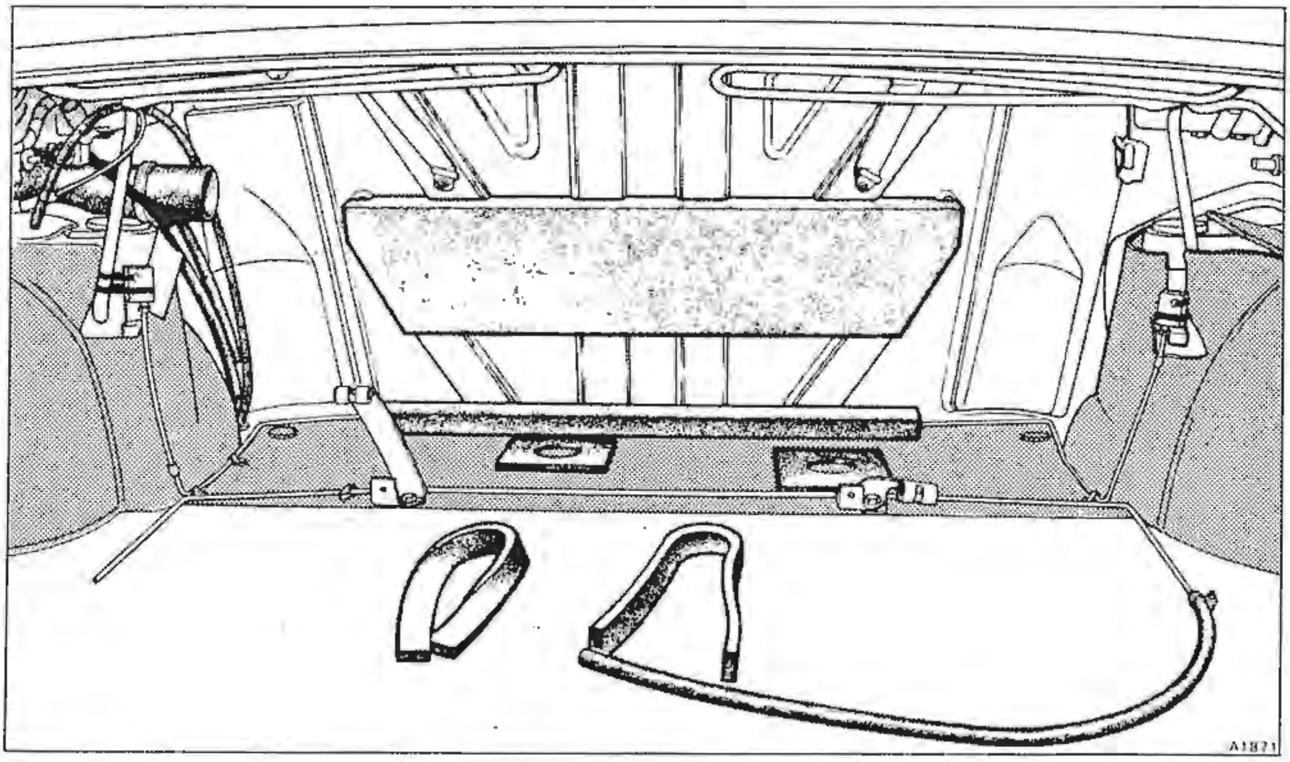

Fig. C2-2 Fuel tank mounting pads and straps (4 door cars)

15. Rotate the rollover tube into the upright position. Clip the tube to the hydraulic connector blocks on either side of the tank, using Insulok plastic clips.
16. Connect the hose that passes through the luggage compartment floor to the left-hand upright pipe. Connect the right-hand upright pipe via a hose to the centre vent connection on top of the fuel tank. Secure the hoses with retaining clips.

Note A restrictor is fitted into the right-hand hose which connects to the fuel tank centre vent.

On 4 door cars the right-hand hose is fitted into the rear quarter panel.

17. Fit the two lower fuel tank retaining straps, together with their panel brackets.
18. Fit the two compriband strips around the fuel tank.
19. Bend the retaining straps around the fuel tank, ensuring that they seat onto the compriband strips.
20. Fit a bridge piece to the end of each securing strap. Secure the fuel tank in position by fitting the long bolt, downwards, through the crossmember (if fitted), upper and lower securing strap bridge pieces and straps. Screw a full nut onto the bolt.
21. Repeat Operation 20 to the second set of securing straps.
22. Tighten the full nut of each set of securing straps and lock into position by fitting an additional half-nut to each of the two bolts.
23. Fit the rubber intake pipe to the fuel tank neck and secure the end of the hose with a worm drive clip.
24. Connect the fuel feed hose and return pipe. Connect the electrical cables to the fuel tank pre-pump.
25. Locate the fuel gauge sender unit electrical loom (see figs. C2-4 and C2-5). There are three cables in the loom and these are coloured black, green/orange, and green/slate.

Tape the cables across the fuel tank until they are adjacent to the fuel sender unit.

26. Connect the cables to the fuel gauge sender unit.
27. Remove the end screw from the battery master switch (if fitted) and remove the knob and special ring nut.
28. Locate the base of the carpet covered panel against the two brackets and clips; on 4 door cars secure with two screws. On 2 door cars connect the luggage compartment lamp and centralized door locking switch electrical cables. Secure the top of the panel with Pozidriv screws, ensuring the panel locates over the battery master switch (if fitted).
29. Fit the battery master switch special ring nut and knob. Secure the knob with the centre screw.
30. Connect the battery.

Fuel filler – To remove and fit (4 door cars)

1. Disconnect the battery.
2. Unscrew and remove the Pozidriv screws securing the carpet covered sealing panel at the forward end of the luggage compartment. Remove the centre screw from the battery master switch (if fitted) and remove the knob. Remove the special ring nut.
3. Withdraw the carpet covered sealing panel to reveal the fuel tank assembly.
4. Unscrew and remove the self-tapping screws securing the tools stowage tray. Withdraw the stowage tray.
5. Remove the clips securing the two rubber hoses to the two outer vents on the top of the fuel tank and withdraw the hoses. One hose fits directly on to a vent, while the other fits to a metal pipe which extends across the width of the fuel tank.
6. Unscrew the worm drive clip securing the fuel inlet hose to the fuel tank; detach the hose and blank off the fuel tank inlet.
7. Unscrew and remove the fuel filler cap.
8. Using a screwdriver, unscrew and remove the six screws securing the fuel filler head to the body. Collect the washers from the retaining screws and

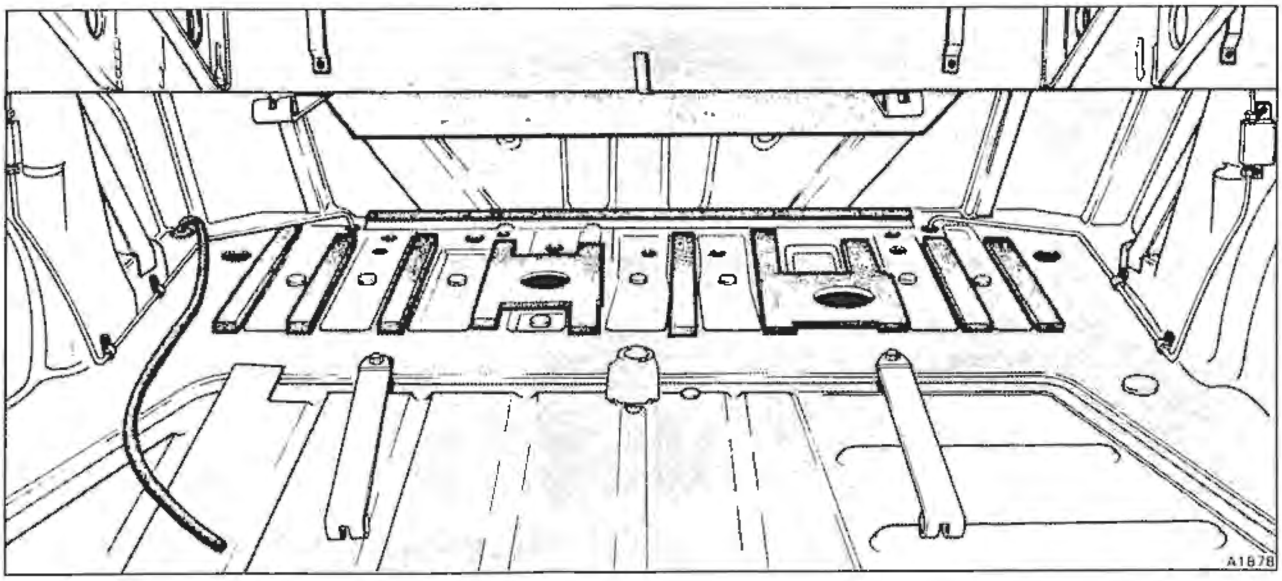

Fig. C2-3 Fuel tank mounting pads and straps (2 door cars) withdraw the fuel filler head assembly downwards into the luggage compartment.

9. Fit the fuel filler assembly by reversing the procedure given for removal, noting that when fitting the fuel filler head to the body the restrictor should be in its lowest position.

Fuel filler – To remove and fit (2 door cars)

1. Remove the carpet covered sealing panel from the forward end of the luggage compartment.
2. Disconnect the two rubber hoses from the outer vents on top of the fuel tank.
3. Unscrew the upper and lower worm drive clips from the fuel filler neck assembly. Withdraw the assembly and blank off the fuel tank.
4. Open the fuel filler flap. Remove the fuel filler cap.
5. Using a screwdriver, unscrew and remove the screws securing the fuel filler head to the body, collect the washer from beneath the head of each screw. Withdraw the assembly.
6. Fit the fuel filler assembly by reversing the procedure given for removal.

Fuel pump/fuel accumulator assembly – To remove and fit (see figs. C2-6 and C2-7)

1. Disconnect the battery.
2. Depressurize the fuel system (refer to page C2-1).
3. Disconnect the electrical cables from the fuel pump, identify each to facilitate assembly.
4. Clamp the flexible fuel hose connecting the fuel tank to the fuel pump.
5. Unscrew the worm drive clip securing the fuel supply hose to the fuel pump inlet connection. Blank off the fuel pump connection.

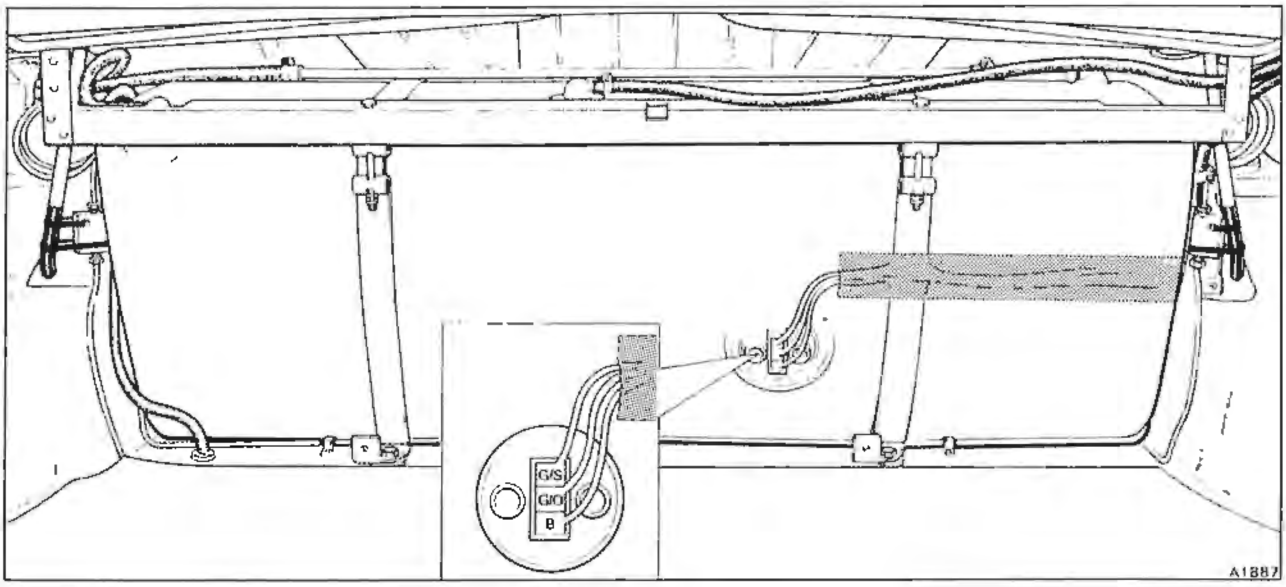

Fig. C2-4 Fuel tank in position (4 door cars)

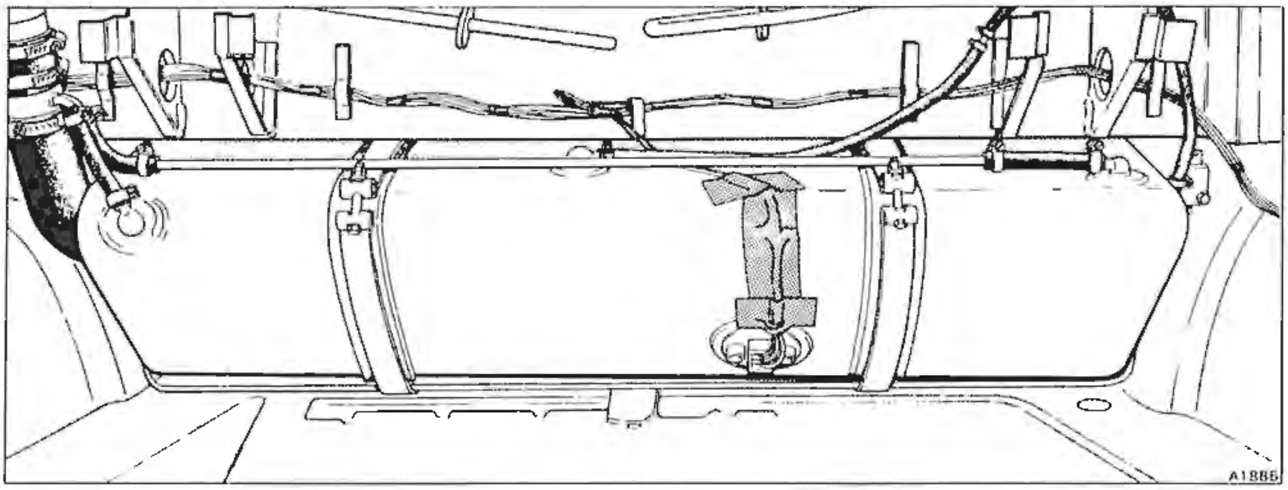

Fig. C2-5 Fuel tank in position (2 door cars)

6. Clamp the flexible fuel hose at the rear of the fuel accumulator.

7. Unscrew the worm drive clip securing the hose to the fuel accumulator. Blank off the accumulator connection.

8. Locate the fuel pump/accumulator outlet pipe to flexible feed hose joint. Using a suitable spanner, hold the hexagon of the feed hose. With a second spanner unscrew the pipe nut on the pump outlet.

9. Remove the nuts securing the fuel pump/fuel accumulator assembly to the three metalastik mounts. Support the assembly as the nuts are removed. Lower the assembly from the car.

10. To remove the fuel pump or fuel accumulator from the mounting bracket, remove the fuel pressure damper and metal junction pipe. Release the 'U' bolts or clamp brackets situated around the components. Withdraw the fuel pump and accumulator.

11. Fit the fuel pump/fuel accumulator assembly by reversing the removal procedure, ensuring that the rubber insulation strips around the pump and accumulator are in good condition.

Fuel pressure damper – To remove and fit

1. Disconnect the battery.
2. Depressurize the fuel system (refer to page C2-1).
3. Position a spanner on the hexagon of the fuel pump outlet adapter. Using a second spanner on the hexagon of the damper assembly, unscrew the damper assembly. This will prevent the adapter turning as the damper is unscrewed. Collect the sealing washer between the damper and fuel pipe banjo connection.
4. Remove the banjo pipe by unscrewing the pipe connection from the fuel accumulator.
5. Collect the sealing washer from between the banjo pipe and fuel pump adapter.
6. Fit the fuel pump pressure damper by reversing

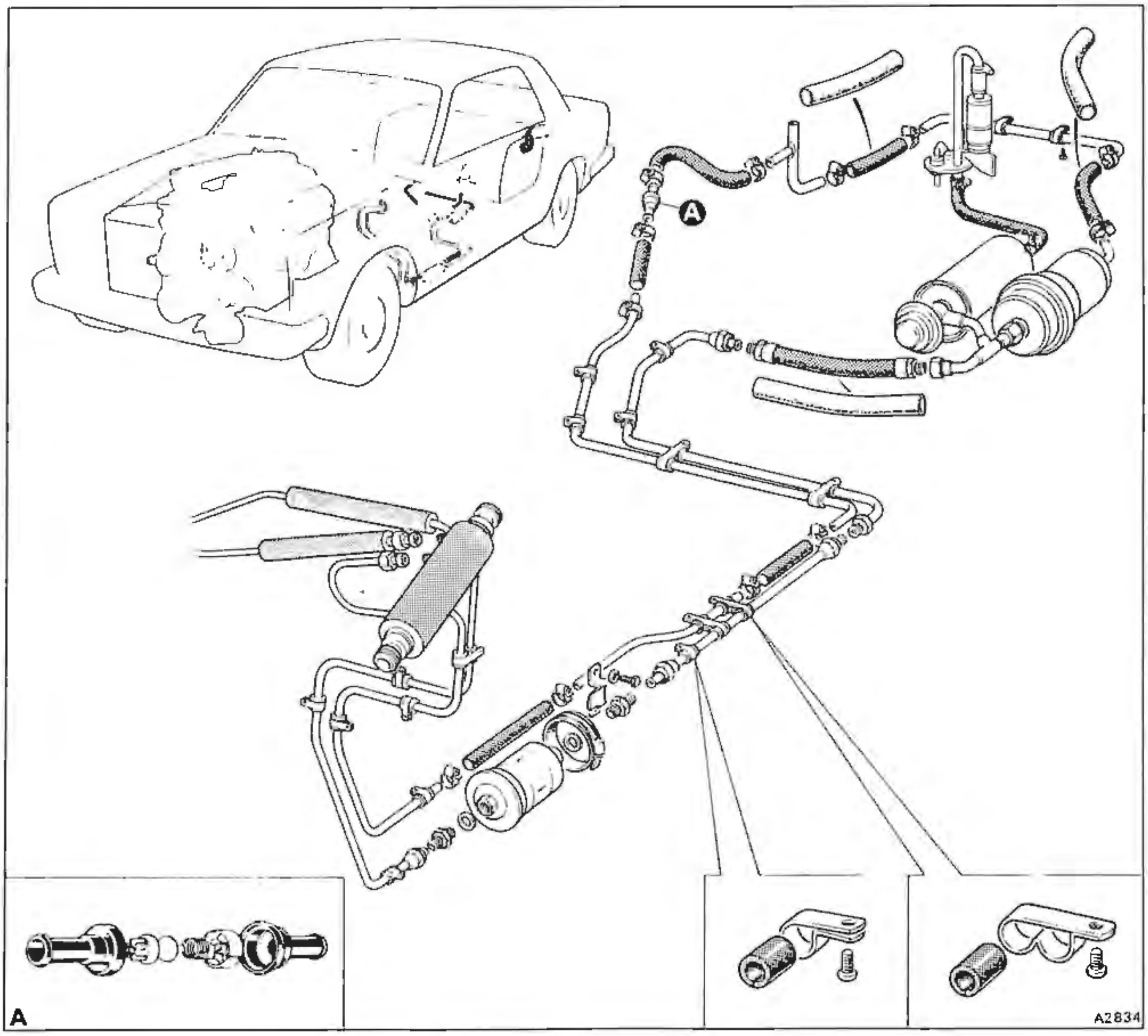

Fig. C2-6 Fuel pipes and fittings

the removal procedure, ensuring that the fuel pump outlet adapter is tight in the fuel pump. Also, ensure that the sealing washers are in good condition and fitted one on each side of the outlet pipe banjo connection.

Fuel filter – To remove and fit (see fig. C2-6)

1. Disconnect the battery.
2. Depressurize the fuel system (refer to page C2-1).
3. Unscrew the filter inlet and outlet pipe unions and blank the open connections.
4. Slacken the worm drive clip securing the filter assembly to the mounting bracket; withdraw the filter assembly.
5. If a new filter is to be installed, unscrew the inlet and outlet unions from the ends of the assembly and fit them into the new assembly.

Ensure that the sealing washers are in good condition.

6. Fit the fuel filter by reversing the removal procedure. Note that the rubber insulating strip fitted around the body of the filter is in good conditon and the arrows on the side of the filter are pointing in the direction of flow.

Fuel lines (see fig. C2-6)
The fuel lines consist of metal bundy tubing and reinforced fuel resistant rubber hoses.

Metal piping is used where possible and is attached to the body and inner longeron by metal clips (with rubber inserts) and self-tapping screws.

Rubber hoses are used where there is a joint or flexibility is required.

Joints in the fuel line on the pressurized (feed) side of the system are usually made by a threaded adapter and union. However, on the unpressurized (return) side of the system a joint is usually effected by a rubber hose and worm drive clip.

Always depressurize the fuel system before removing any parts connected into the fuel feed line.

A non-return valve (inset A) is situated in the fuel return line in the vicinity of the final drive unit. This valve is fitted to prevent the back-flow of fuel. The valve is a non-serviceable unit and if its operation is suspect a new assembly should be fitted.

Fuel return line non-return valve – To remove and fit

1. Clamp the rubber fuel pipe before and after the valve.

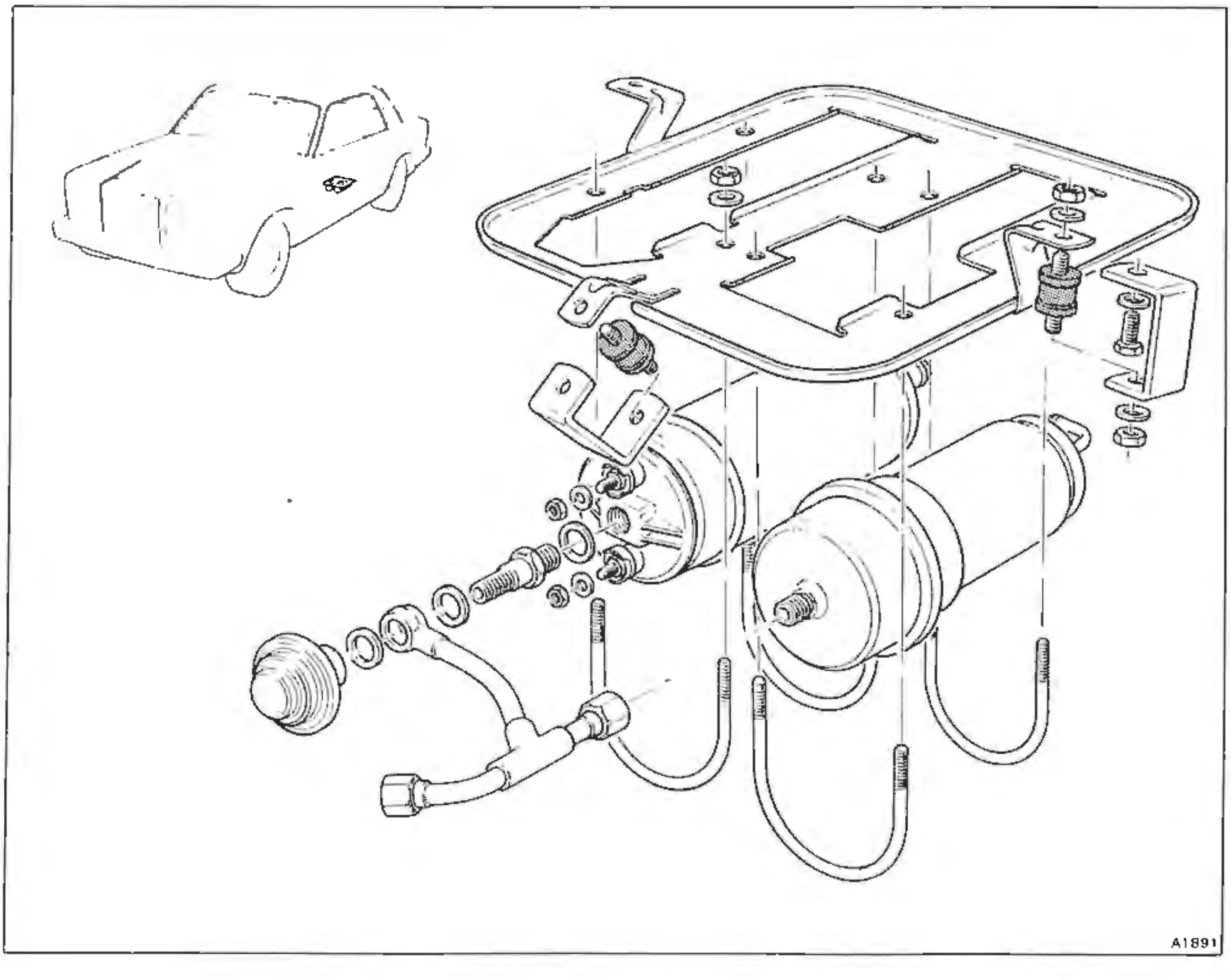

Fig. C2-7 Typical fuel pump/fuel accumulator assembly

2. Slacken the worm drive clips on either side of the valve and withdraw the pipes.
3. Blank off the open pipe connections if the new valve is not fitted immediately.
4. Fit the valve by reversing the removal procedure. Note that flow directional arrows are situated on the valve body.

In-tank pre-pump - To remove and fit

1. Carry out the necessary workshop safety precautions (refer to Chapter A).
2. Disconnect and remove the battery.
3. Depressurize the fuel system (refer to page C2-1).
4. Siphon the fuel from the tank.
5. From beneath the car, detach the fuel feed connection at the fuel tank. Blank off the open connections.
6. Disconnect the electrical cables from the in-tank pre-pump. Note the connections to facilitate assembly.
7. Using the special tool RH 9928, turn the locking ring anti-clockwise to remove the pre-pump from the tank.
8. Withdraw the pre-pump and discard the sealing ring.
9. Fit the pre-pump by reversing the removal procedure, noting the following.

a. Ensure that the shape of the pre-pump filter is not deformed in any way (i.e. not collapsed and that the support spring is fitted). Refer to figure C2-8.

b. Ensure that a new sealing ring is fitted.

c. Secure the locking ring using the special tool RH 9928.

d. Ensure that the lug on the locking ring just contacts the stop on the fuel tank outlet. **Do not overtighten.**

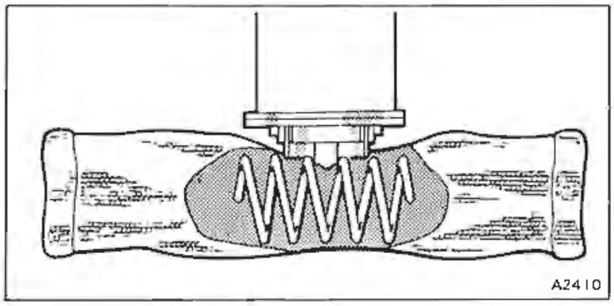

Fig. C2-8 Pre-pump filter

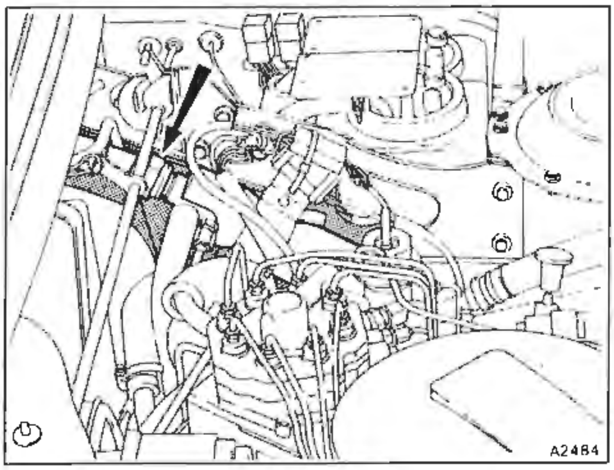

Fig. C2-9 Fuel cooler

Fuel cooler (see fig. C2-9)

A fuel cooler is fitted to all 1989 model year cars. It is located in the rear left-hand corner of the engine compartment.

The fuel cooler is fitted into the fuel return line and utilizes the air conditioning system refrigerant to cool the fuel.

The fuel cooler is therefore, cooling the fuel whenever the air conditioning system compressor is operating.

Fuel cooler - To remove and fit

1. Carry out the necessary workshop safety precautions (refer to Chapter A).
2. Disconnect and remove the battery.
3. Discharge the refrigerant (refer to TSD 4700, Chapter C).
4. Depressurize the fuel system (refer to page C2-1).
5. Detach the two fuel pipes from the side of the fuel cooler.
6. Detach the refrigeration pipe from each end of the assembly.
7. Unscrew the retaining bracket clamp screw. Collect the nut and washer.
8. Carefully prise the retaining bracket open sufficiently to withdraw the fuel cooler.
9. Fit the fuel cooler by reversing the removal procedure, noting the following.
10. Ensure that the rubber insulation surrounding the fuel cooler is in good condition and correctly positioned.

Turbocharging system

Contents

5/88
Printed in England

Issue record sheet

The dates quoted below refer to the issue date of individual pages within this chapter.

Sections	D1	D2	D3
Page No.			
1	5/88	10/88	5/88
2		12/86	5/88
3	2/90	12/86	5/88
4		12/86	5/88
5		10/87	5/88
6		10/87	5/88
7		10/87	5/88
8			
9		10/88	5/88
10			
11		10/88	5/88
12			
13		2/90	2/90
14			
15		10/87	5/88
16			
17		10/87	7/88
18		10/87	5/88
19		2/90	2/90
20		10/87	5/88
21			
22			
23			
24			
25			
26			
27			
28			
29			
30			
31			
32			
33			
34			
35			
36			
37			
38			
39			
40			
41			
42			
43			
44			
45			
46			
47			
48			
49			
50			
51			
52			
53			
54			

Printed in England

Turbocharging system

Basic principle of operation (see fig. D2-2)
The turbocharger is designed to increase the power and torque of the engine under certain operating conditions. This is achieved by utilizing energy from the exhaust gases to pump additional air into the engine at wide throttle openings. When this occurs, the turbocharger is applying 'boost' to the induction system.

The size of the turbocharger has been chosen to ensure a substantial increase in torque at low engine speeds. However, if not correctly controlled this would result in excessive boost pressure and power output at high speeds.

To overcome this situation a wastegate is fitted into the exhaust system between the engine and the turbocharger.

Operation of the wastegate is controlled by an electronic control unit (ECU). This unit receives information from the two knock sensors (detonation), the ignition system (engine speed), and the air pressure transducer (comparing boost and manifold pressure).

When certain conditions are sensed by the ECU, it signals to close the boost control valve. The resultant build-up of signal pressure is then applied to the wastegate diaphragm.

At a pre-set pressure the wastegate opens and allows a proportion of exhaust gas to by-pass the turbocharger. This ensures that the power of the engine is limited to a safe level.

To prevent surging of the turbocharger compressor when the throttles are suddenly closed, a dump valve is fitted into the cast air intake elbow. This assembly allows the inlet air to be recirculated from the air intake system to the compressor and relieves the boost pressure when the throttles are closed.

When the throttles are opened the dump valve is closed and boost pressure is rapidly applied to the engine.

Description of the components
Three systems form and control the turbocharging system. These are the air flow system (both inlet and exhaust), the fuel system, and the ignition system. All have their various control systems (some of which are interrelated) to ensure that they function properly and at the correct time.

This section relates to control systems and components that operate the basic turbocharging system and comprise the following.
Turbocharger assembly
Wastegate

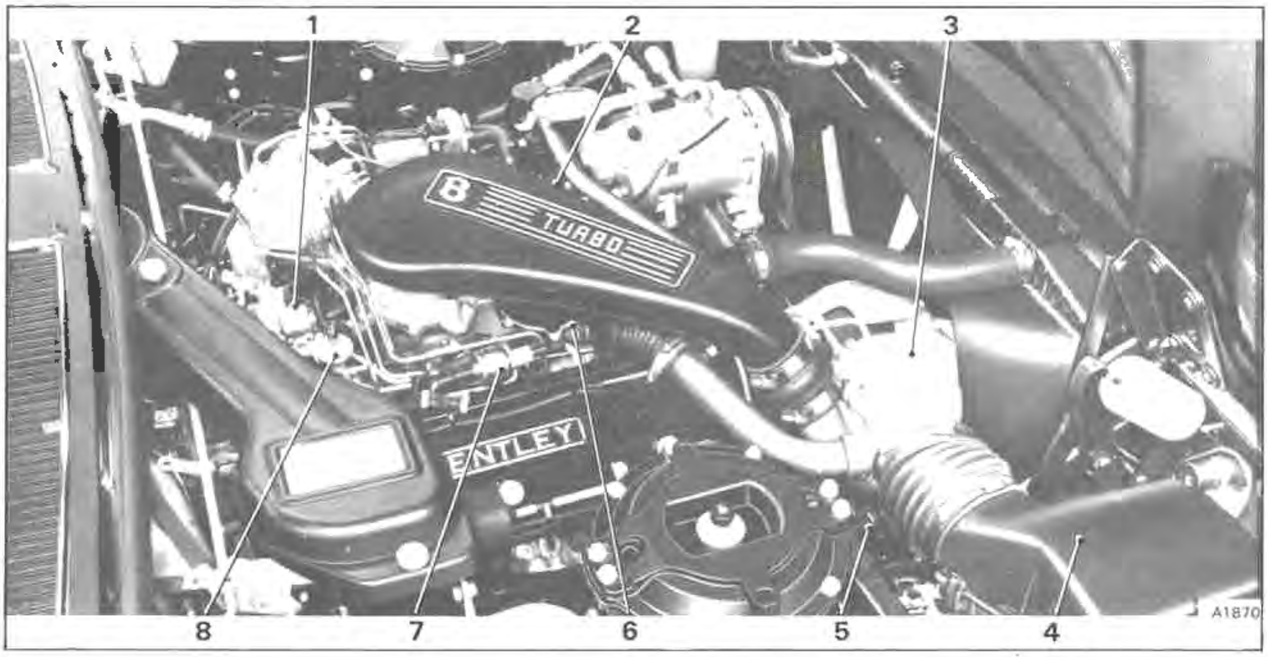

Fig. D2-1 Engine compartment details
1 Dump valve solenoid valve
2 Cast air intake elbow
3 Turbocharger assembly
4 Air intake filter housing
5 Exhaust gas wastegate (partially hidden)
6 Dump valve assembly (partially hidden)
7 Boost control solenoid valve
8 Dump valve vacuum switch

Dump valve
Dump valve vacuum switch and solenoid
Boost control ECU
Boost control valve
Knock sensors
Air pressure transducer

Turbocharger (see fig. D2-3)
The turbocharger is basically an air pump driven by the energy of the exhaust gas. The main components are the exhaust turbine, the shaft, the compressor, and the centre housing assembly.

The turbine and compressor are mounted at opposite ends of the same shaft which is supported in plain bearings within the centre housing. The compressor is contained within an aluminium alloy housing and the exhaust turbine within the cast iron housing. Both housings are bolted to the centre housing and the complete assembly is mounted via the turbine flange to the exhaust manifold.

The plain bearings that support the shaft have floating bushes which are lubricated by pressurized engine oil. The oil is also used to cool both the bearings and the centre housing assembly.

Oil seals are fitted at either end of the shaft to prevent oil leakage into the turbine or compressor housings.

Do not use an exhaust extraction system on the vehicle. Failure to observe this caution may result in a temporary leak from the turbocharger oil seal arrangement. This leak may continue for some time after the extraction equipment has been removed.

Exhaust gas wastegate (see fig. D2-4)
The exhaust gas wastegate is used to control the boost pressure by regulating the flow of exhaust gas to the turbocharger turbine. This controls the energy available for compressing inlet air.

The boost pressure is taken from a tapping at the end of the turbocharger compressor volute and acts on a diaphragm connected to the wastegate valve. As the boost pressure rises, the diaphragm acts against a spring and at a predetermined pressure the valve lifts off its seat, wasting some of the exhaust gas and limiting the boost pressure.

The boost pressure signal to the wastegate is vented to atmosphere by the boost control valve. This solenoid valve is unenergized in the open position. When it receives a signal from the electronic control

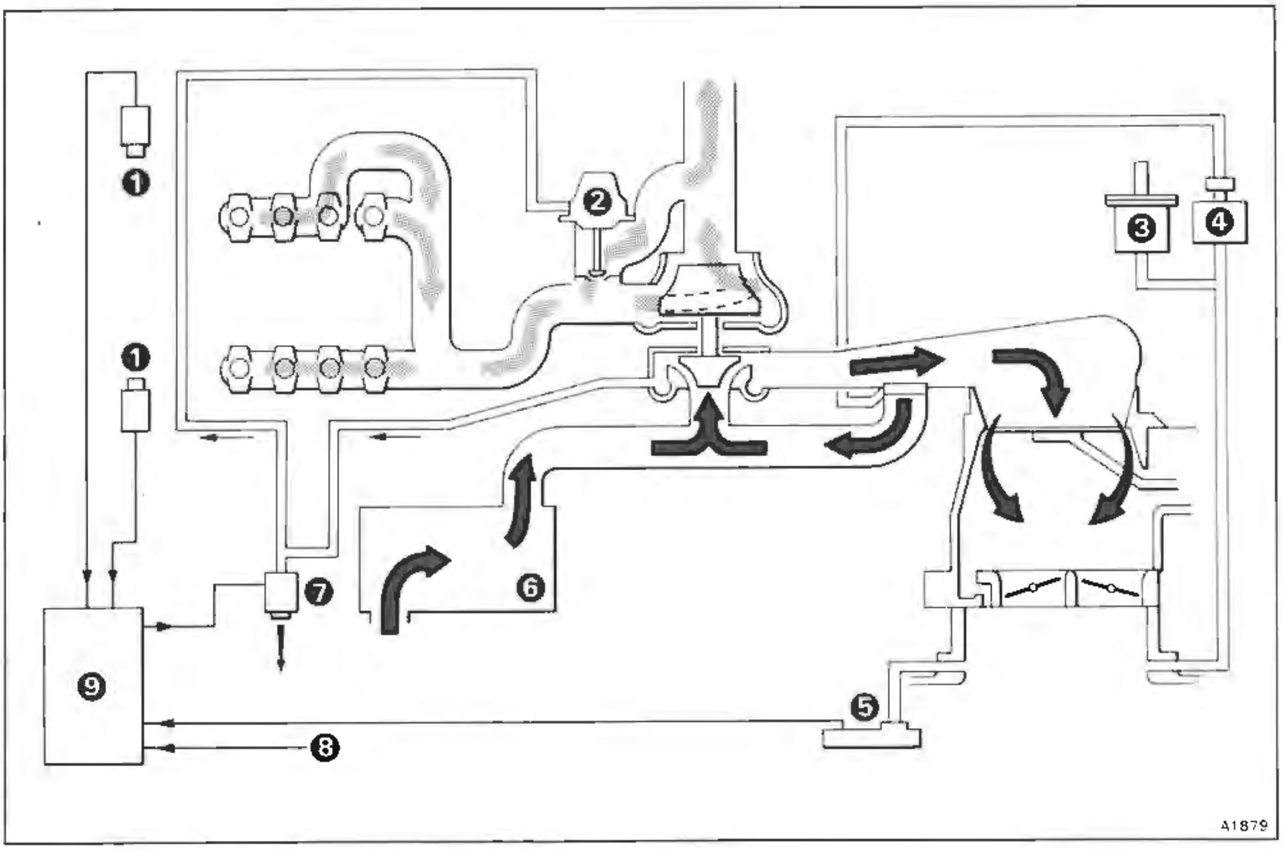

Fig. D2-2 The turbocharging system
1 Knock sensor
2 Exhaust gas wastegate
3 Dump valve vacuum switch
4 Dump valve solenoid valve
5 Air pressure transducer
6 Air intake filter housing
7 Boost control solenoid valve
8 Ignition input signal (engine speed)
9 Electronic control unit (ECU)

unit (ECU) the solenoid valve closes and allows pressure to build-up in the wastegate.

Dump valve (see fig. D2-5)
The manifold depression operated dump valve is situated in the cast air intake elbow. At low engine loads [manifold vacuum greater than 368,30 mm Hg (14.5 in Hg)] it allows air to recirculate through the intake system and back into the compressor.

At higher engine loads the dump valve closes (due to a fall in the manifold depression) and pressure builds-up in the induction system, increasing part throttle engine power and improving throttle progression on the primary chokes.

A solenoid valve operated by a vacuum switch, connects the dump valve to atmospheric pressure whenever the inlet manifold vacuum is less than 368,30 mm Hg (14.5 in Hg) and allows the dump valve to close.

When the vacuum switch and solenoid are de-energized [inlet manifold vacuum greater than 368,30 mm Hg (14.5 in Hg)], the solenoid connects the dump valve to the inlet manifold vacuum which in turn, draws the valve open.

The dump valve also acts as a relief valve if the boost pressure exceeds approximately 0,59 bar (8.5 lbf/in², 439,50 mm Hg, 17.30 in Hg).

Boost control (see fig. D2-6)
This system is controlled by an electronic control unit (ECU) situated behind the front flasher lamp on the left-hand side of the vehicle.

The function of the unit is to interpret electrical signals received from the ignition system (engine speed), the two knock sensors (detonation), and the air pressure transducer (comparing boost and manifold pressure).

When the ECU receives certain signals it operates the boost control solenoid valve. This in turn opens the wastegate to limit the amount of exhaust gas available to drive the turbocharger turbine.

Boost inhibit
This system prevents the build-up of boost pressure when the vehicle is stationary with the brakes applied, the transmission is in drive range, and the accelerator pedal depressed.

When the ECU senses that the above conditions prevail, it signals to close the boost control solenoid. The resulting build-up of pressure in the control line, opens the wastegate and prevents a build-up of the main boost pressure.

Engine knock sensors
A knock sensor is fitted between cylinders two and three of both 'A' bank and 'B' bank.

The sensor produces a small output signal when it detects detonation.

The output signal is processed by the boost control electronic control unit which then decides if detonation is present.

If detonation is present the electronic control unit (ECU) signals to the boost control solenoid to close and control the boost pressure.

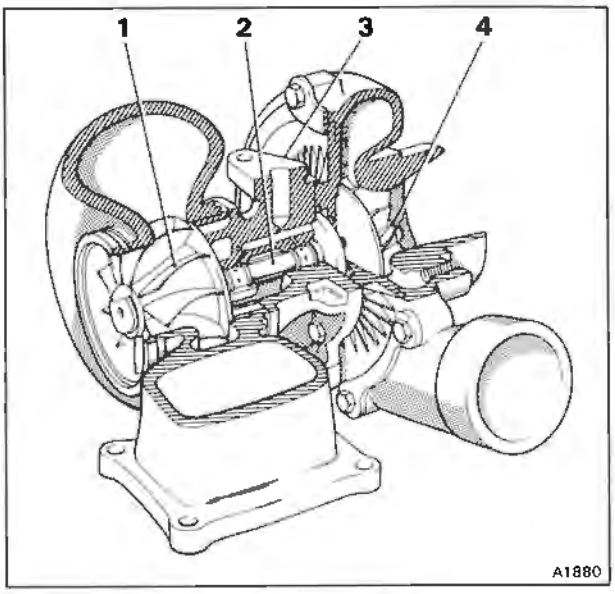

Fig. D2-3 The turbocharger assembly
1 Exhaust turbine
2 Shaft
3 Centre housing
4 Intake compressor

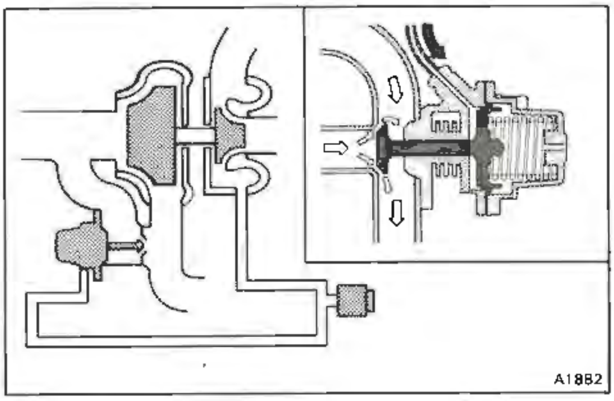

Fig. D2-4 Exhaust gas wastegate and control system

Air pressure transducer (see fig. D2-7)
The air pressure transducer is a cast aluminium block mounted on the speed control actuator at the rear of 'A' bank cylinder head.

The unit monitors induction manifold pressure, primarily for the fuel injection system. However, it also provides instantaneous boost pressure information for the knock sensing boost control system.

Modes of operation

This section comprises a brief description of the operating modes for the system.

Engine light load operation
With a small throttle opening and low engine speed the inlet manifold depression is high. Therefore, the dump valve vacuum switch de-energizes the solenoid valve and allows the inlet manifold depression to open the dump valve.

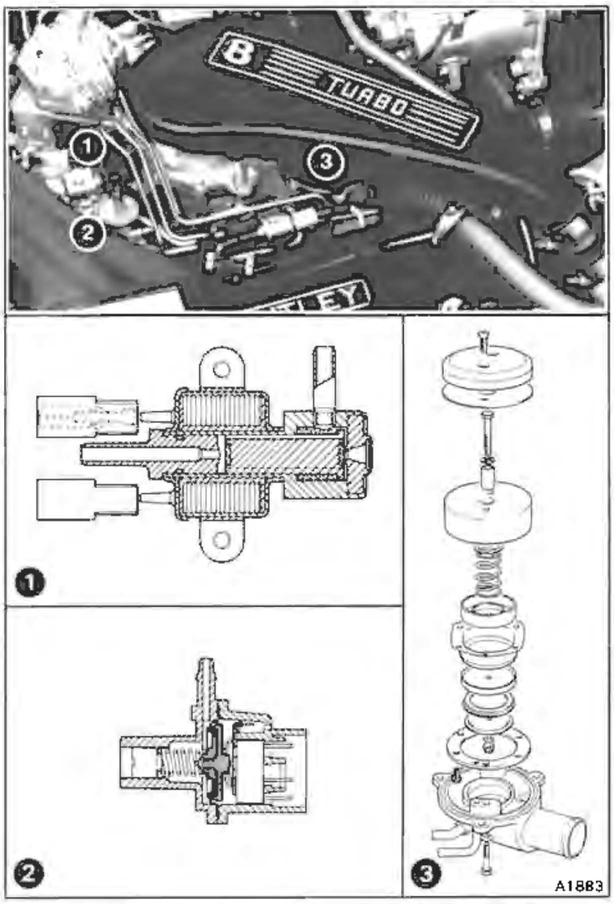

Fig. D2-5 Dump valve and control system

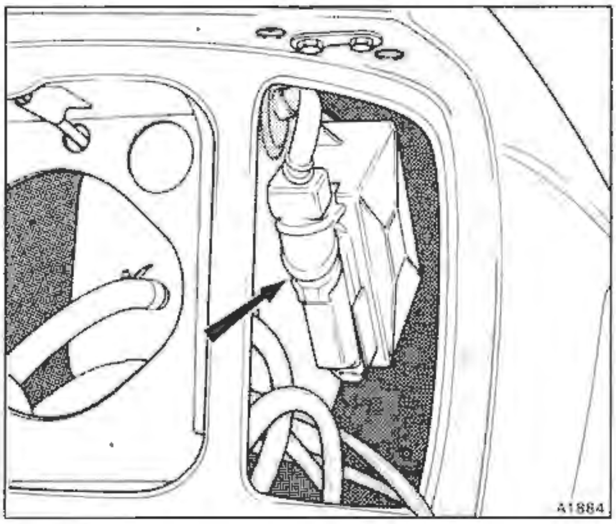

Fig. D2-6 Boost control electronic control unit (ECU)

The inlet air delivered by the turbocharger compressor to the air intake elbow is allowed to return to the compressor via the dump valve. Under these conditions there is no turbocharging effect and the engine operates in the 'conventional' naturally aspirated manner.

Engine part throttle operation (with boost)
When the throttles are partially opened to meet an increase in engine load, the inlet manifold depression will fall below 368,30 mm Hg (14.5 in Hg). Therefore, the dump valve vacuum switch energizes the solenoid valve and closes the dump valve by venting it to atmosphere.

When the dump valve closes the air recirculation pipe, air from the turbocharger compressor is retained within the induction system. This causes pressure to build-up to approximately 0,48 bar (7 lbf/in^2, 361,97 mm Hg, 14.25 in Hg), dependent upon the throttle openings.

The increased density of inlet air permits an increase in the volume of fuel that can be burnt in the engine (whilst maintaining the correct air/fuel ratio). This therefore, produces a correspondingly higher engine power output.

The boost pressure is also piped from the turbocharger compressor to the exhaust gas wastegate assembly via the boost control solenoid valve. Normally this valve vents the signal pressure to atmosphere. However, when the boost control electronic control unit (ECU) signals to close the solenoid to atmosphere, boost pressure builds-up in the signal line.

At a predetermined pressure the wastegate valve lifts off its seat. This allows a proportion of the exhaust gas to by-pass the turbocharger turbine limiting the speed and therefore, the power driving the turbocharger compressor. This action limits the boost pressure.

If due to malfunction, the boost pressure is not limited in the manner described, the dump valve will act as a relief valve when the pressure approaches approximately 0,59 bar (8.5 lbf/in^2, 439,50 mm Hg, 17.30 in Hg).

Engine full load operation
With the throttles fully opened, the inlet manifold depression is below the setting required to keep the dump valve open. Therefore, the vacuum switch activates the solenoid which vents the dump valve to atmosphere, closing the valve.

Boost pressure from the turbocharger builds-up in the induction manifold and the turbocharging effect is evident with increased engine power.

The turbocharger boost pressure is also fed to the exhaust gas wastegate assembly. At a pre-set pressure the valve is lifted from its seat and allows some exhaust gas to by-pass the turbocharger turbine. This limits the speed of the compressor and therefore, the boost pressure.

If a malfunction of a component results in excessive boost pressure, the dump valve will operate as a relief valve at approximately 0,59 bar (8.5 lbf/in², 439,50 mm Hg, 17.30 in Hg).

In abnormal conditions, as the engine overcomes the load imposed upon it, it may be possible to detect detonation momentarily before the knock sensing system takes control.

The system comprises a knock sensor fitted to each bank of engine cylinders. The sensors produce a small signal when detonation is detected. This signal is fed to the electronic control unit for processing.

If detonation is present the electronic control unit signals to the boost control solenoid valve to close. This allows boost control signal pressure to be exerted on the wastegate diaphragm, to open the wastegate.

The speed of the turbocharger turbine and compressor is therefore limited by the operation of the wastegate.

Servicing

The information contained in this section includes

Basic system fault finding chart.
System test procedures flow charts.
Mechanical components assembly sequence.
Components removal and fitting procedures.

If a fault cannot be clearly defined, it is suggested that the following procedure is carried out before any involved fault diagnosis work is undertaken.

The procedure should be adhered to otherwise, an incorrect diagnosis may be made which could result in both lengthy and costly repairs.

Procedure

1. Check the **ignition system** and **fuel injection system**, carry out the functional checks detailed in Chapter B.
2. If a fault is apparent, refer to Chapter E for ignition system faults and Chapter B for fuel injection system faults.
3. Ensure that the exhaust emission CO reading is correct, refer to Chapter B.

If the exhaust CO reading is incorrect, carry out a compression test on the engine cylinders before adjusting the mixture strength.

Note Inhibit the operation of the fuel injection system during this test by removing the fuel injection system fuse. Also isolate the ignition system by disconnecting the flywheel sensor. Do not disconnect the HT king lead for this purpose.

Engine cylinder compression pressure 9,66 bar (140 lbf/in²) minimum @ cranking speed
Variation between cylinders must not exceed 1,034 bar (15 lbf/in²)

4. Carry out the turbocharging system flow chart test procedures.

Removal and fitting of components

When removing any parts always blank off the open connections immediately to prevent the ingress of dirt.

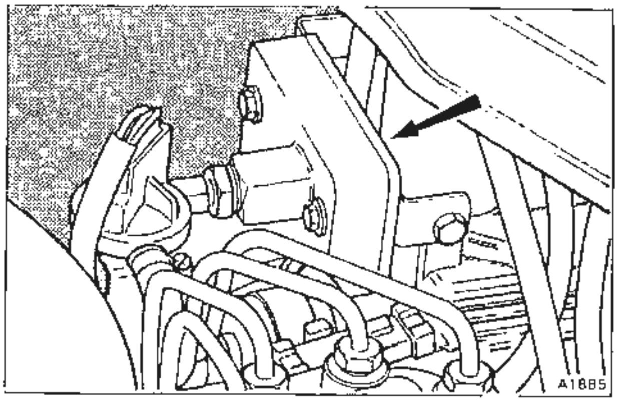

Fig. D2-7 Air pressure transducer

Turbocharger assembly – To remove and fit

1. Slacken the worm drive clip securing the air intake hose to the turbocharger intake assembly. Free the joint by twisting the hose.
2. Unscrew the worm drive clip and detach the crankcase breather pipe from the air dump pipe.
3. Slacken the worm drive clips situated at the flexible section of both the air feed and air dump pipes. Free the joints by twisting each rubber hose.
4. Unscrew the nut retaining the intake assembly to the turbocharger; collect the washer and withdraw the intake assembly.
5. Unscrew the banjo bolt from the pressure tapping on the end of the turbocharger compressor casing. Free the joint and collect the aluminium sealing washer from either side of the pipe joint faces.
6. Unscrew the two setscrews retaining the large heatshield to the top of the turbocharger assembly.
7. Unscrew the nut and collect the washer from the lower timing cover stud that retains the large heatshield lower mounting bracket. Withdraw the heatshield.
8. Unscrew the two Allen screws securing the oil feed pipe flange to the top of the turbocharger. Free the joint and discard the gasket.
9. Unscrew the two setscrews securing the oil return pipe flange to the bottom of the turbocharger. Free the joint and discard the gasket.
10. Unscrew the exhaust clamp ring, securing the turbocharger assembly to the exhaust downtake pipe.
11. Unscrew the four nuts retaining the turbocharger assembly to the exhaust mounting flange, collect the distance washers and withdraw the assembly.

Take care not to damage the machined faces of the turbocharger to manifold joint.

12. Fit the turbocharger by reversing the removal procedure, noting the following.
13. Ensure that the face joint surfaces between the turbocharger and exhaust manifold are clean and undamaged.
14. Torque tighten the retaining nuts to the figures given in Chapter L.
15. Before connecting the lubrication pipes, the turbocharger must be primed with clean engine oil in the following manner.

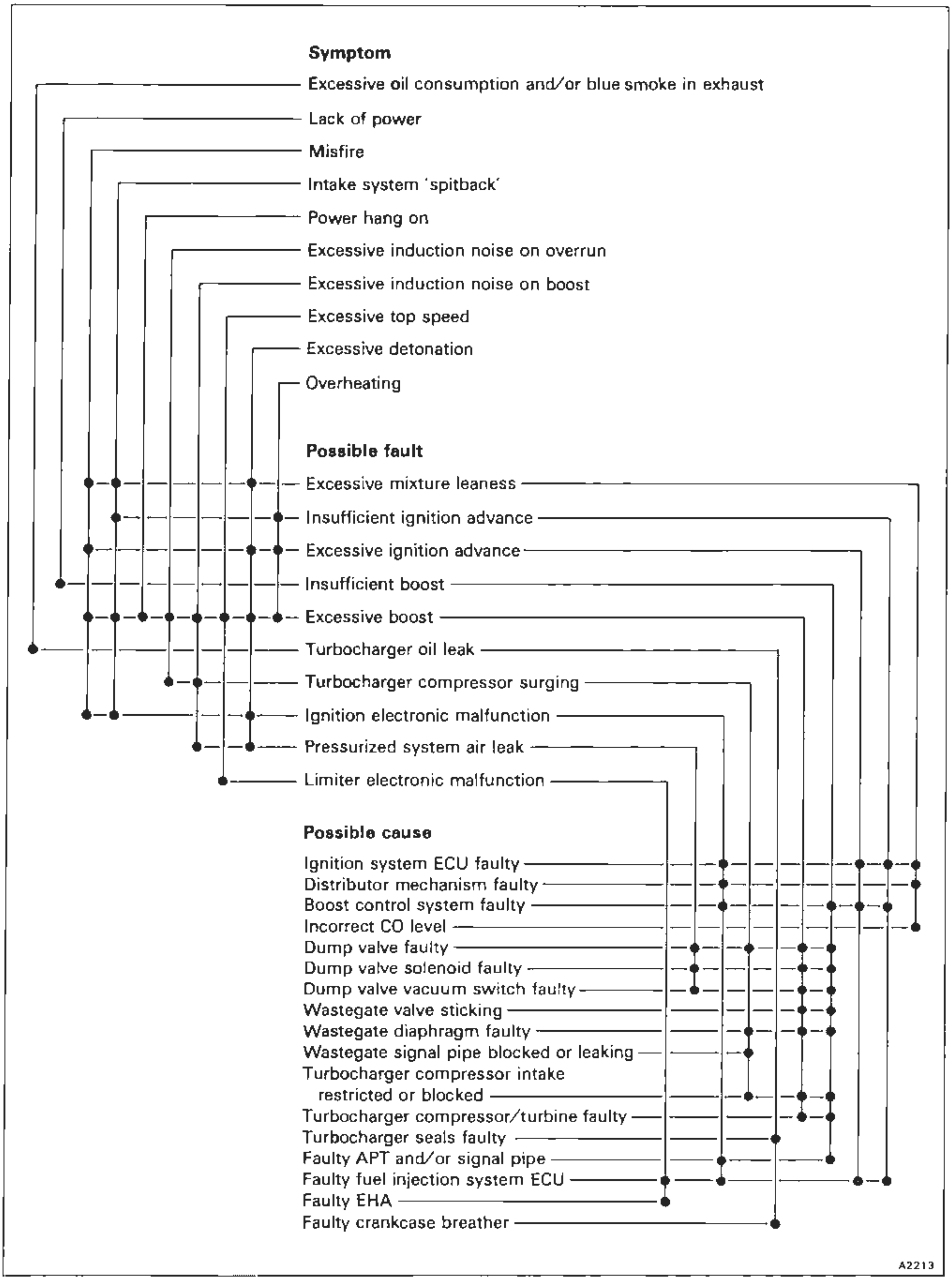

Fig. D2-8 Basic turbocharging fault diagnosis chart

Figure D2-9

Turbocharging system – fault diagnosis chart
Sheet 1 of 5

Preliminary checks and conditions

Important
Boost control, EZ 58F digital ignition, and KE2-Jetronic are 'stand alone' systems. Consult the respective fault diagnosis to identify a possible fault and the system to which the fault relates

1. Unless a fault is absolutely obvious it is recommended that the complete fault finding procedure is carried out
2. Ensure that the battery is fully charged
3. Always use a digital multimeter to carry out electrical circuit tests
4. Always switch off the ignition when either disconnecting or connecting electrical connections
5. Always remake any connection(s) before proceeding to the next test

Possible cause \ **Symptoms**	Poor performance (general)	Poor performance (intermittent)	Poor performance (up to 3000 rev/min – full throttle)	Excessive performance	Misfire	Overboosting	Detonation	Surging [113 km/h to 144 km/h (70 mile/h to 90 mile/h)]
Knock sensors	●	●						
Air pressure transducer	●					●	●	
Boost control valve	●	●	●	●	●	●		
Stall torque limiter – brakes	●		●					
Wastegate	●		●			●	●	
Turbocharger	●			●		●	●	
Dump valve	●					●		●

Visually inspect the electrical connections to the components illustrated below. Detach the multiplug from the boost control ECU and check the integrity of the 13 connections in the plug
Are these satisfactory?

NO → 1. Remake the connections
2. Replace the cables

YES ↓

Switch on the ignition
Wait for approximately 10 seconds
Does the boost control valve 'click' continuously?
Note The valve may 'click' briefly for between 5 and 10 seconds when the ignition is switched on

NO → Disconnect the electrical plug from the boost control valve
Switch on the ignition and measure the voltage at the loom connector
Is it 10 to 13 volts?

NO → Check the cables to the boost control solenoid valve

YES ↓

YES → Carry out checks to the air pressure transducer loom

↓

Check the voltage on the purple/brown cable
Is it 4.9 to 5.3 volts?

NO → Check the boost control valve

YES ↓

Check for cable continuity between the black cable and earth
Is it continuous?

YES → Check the air pressure transducer

NO ↓

Rectify faulty cable

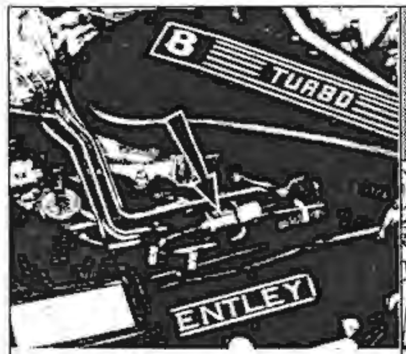

Boost control solenoid valve

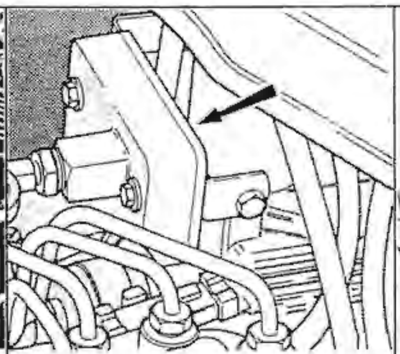
Air pressure transducer (APT)

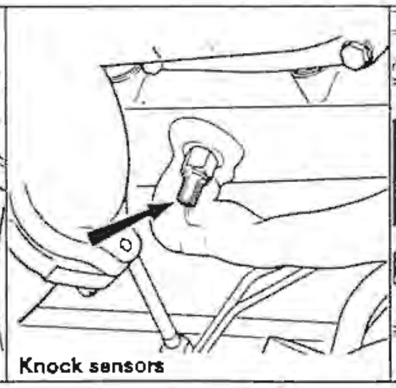
Knock sensors

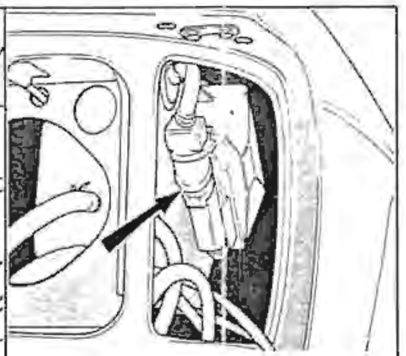
Boost control ECU

Figure D2-9

Turbocharging system – fault diagnosis chart
Sheet 2 of 5

Boost control system air pressure transducer (APT)

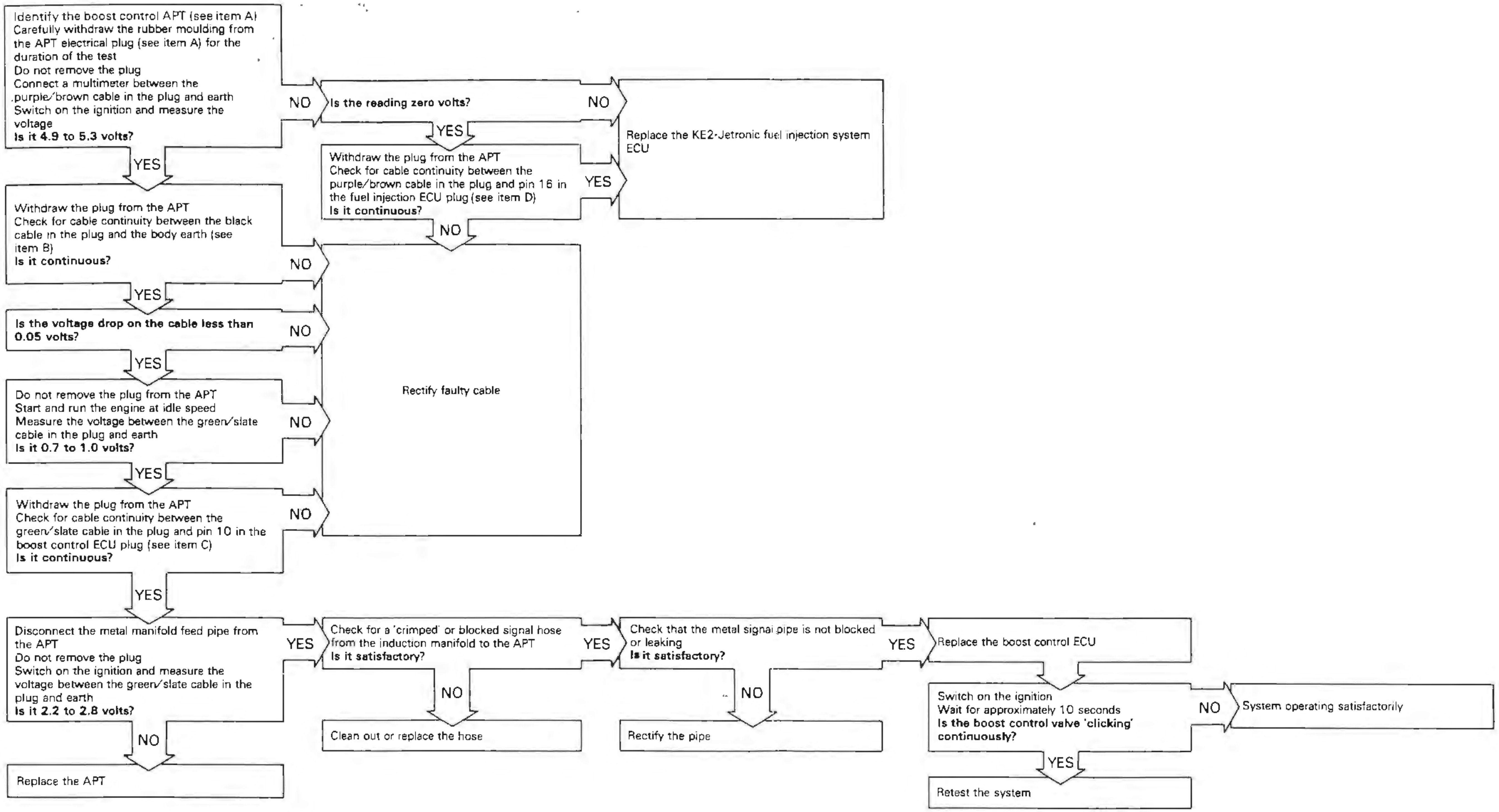

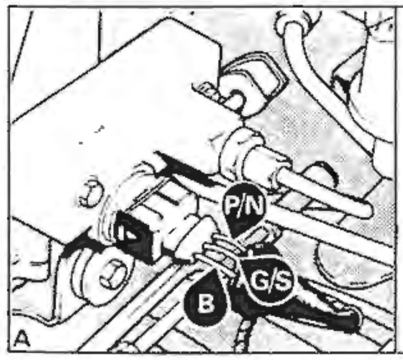

Identification of air pressure transducers (APT)

Early 1987 model year cars have one APT fitted for both the boost control and fuel injection systems.

Late 1987 and all 1988 model year cars have two APTs fitted one for the boost control system and one for the fuel injection system. Both APTs have three cables connected to them via a rubber plug. The colours of the three cables in each loom are similar.

To identify the APTs warm-up the engine and allow it to run at the idle speed setting. Remove the rubber electrical plug from each APT in turn. When the plug is removed from the APT connected to the fuel injection system, the engine will run rich (lumpy) and the rev/min will decrease. The boost control system APT is the one that remains connected during this alteration in engine idle speed conditions.

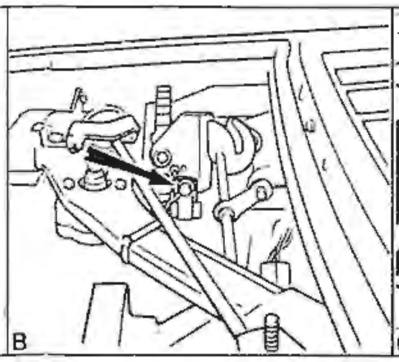

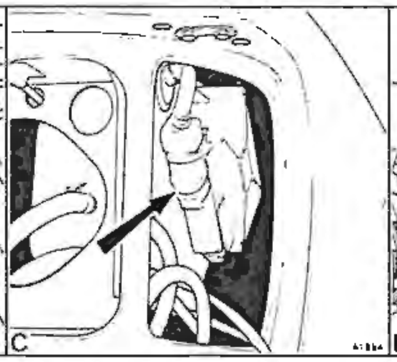

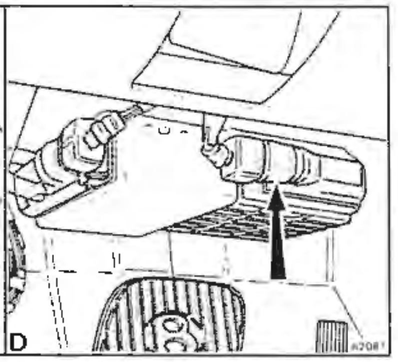

Figure D2-9

Turbocharging system – fault diagnosis chart
Sheet 3 of 5

Boost control solenoid valve

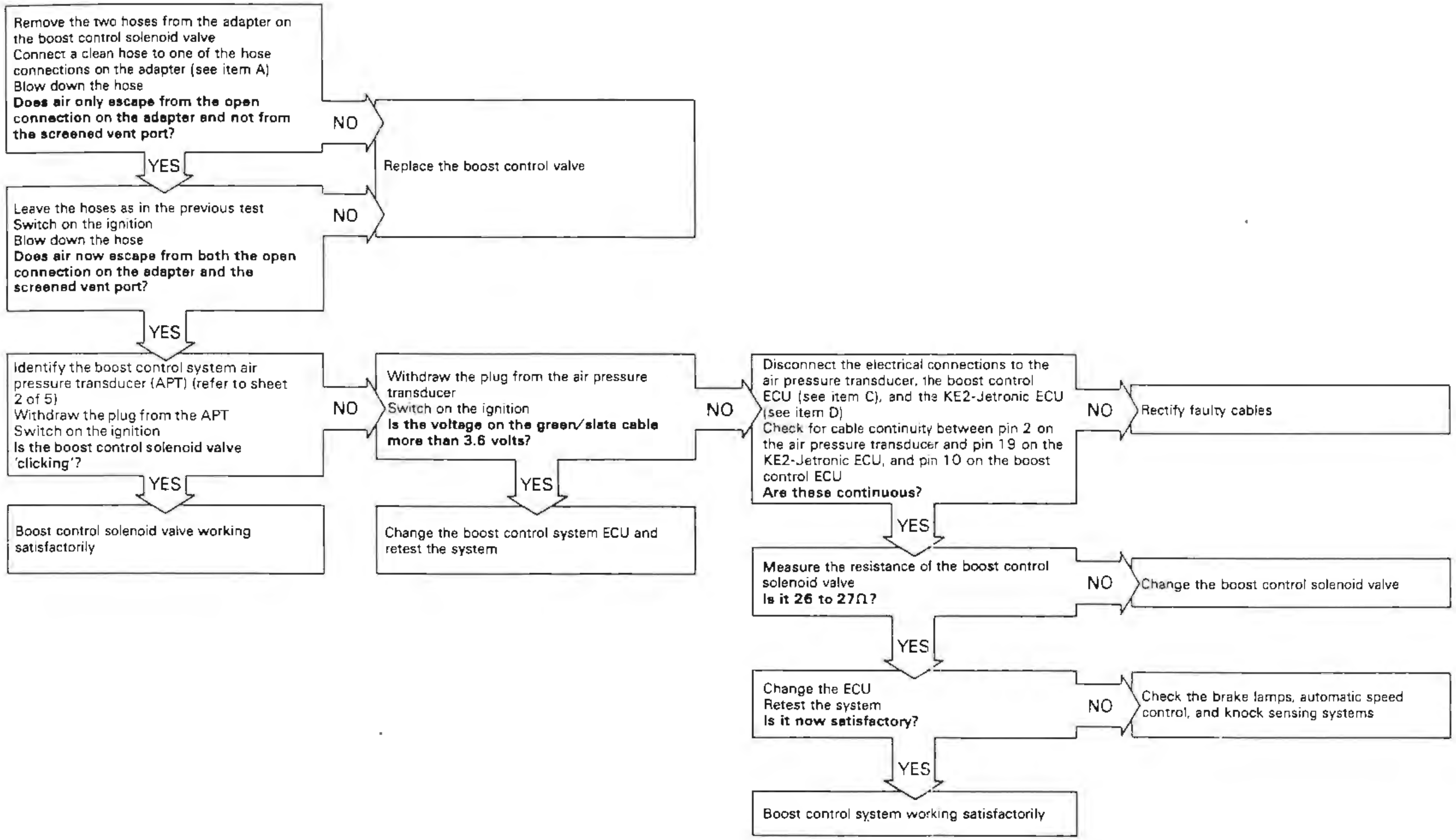

Remove the two hoses from the adapter on the boost control solenoid valve
Connect a clean hose to one of the hose connections on the adapter (see item A)
Blow down the hose
Does air only escape from the open connection on the adapter and not from the screened vent port?

Replace the boost control valve

Leave the hoses as in the previous test
Switch on the ignition
Blow down the hose
Does air now escape from both the open connection on the adapter and the screened vent port?

Identify the boost control system air pressure transducer (APT) (refer to sheet 2 of 5)
Withdraw the plug from the APT
Switch on the ignition
Is the boost control solenoid valve 'clicking'?

Boost control solenoid valve working satisfactorily

Withdraw the plug from the air pressure transducer
Switch on the ignition
Is the voltage on the green/slate cable more than 3.6 volts?

Change the boost control system ECU and retest the system

Disconnect the electrical connections to the air pressure transducer, the boost control ECU (see item C), and the KE2-Jetronic ECU (see item D)
Check for cable continuity between pin 2 on the air pressure transducer and pin 19 on the KE2-Jetronic ECU, and pin 10 on the boost control ECU
Are these continuous?

Rectify faulty cables

Measure the resistance of the boost control solenoid valve
Is it 26 to 27Ω?

Change the boost control solenoid valve

Change the ECU
Retest the system
Is it now satisfactory?

Check the brake lamps, automatic speed control, and knock sensing systems

Boost control system working satisfactorily

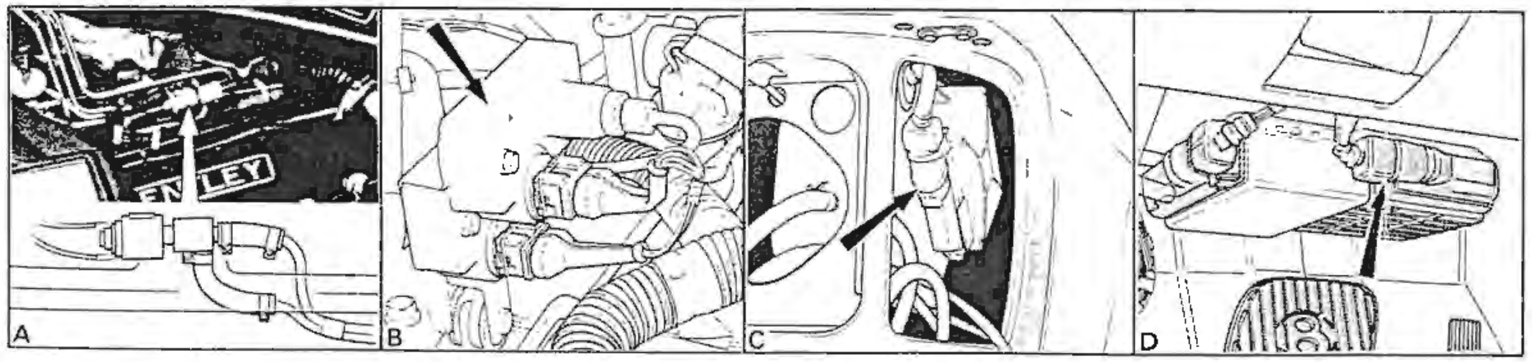

Figure D2-9

Turbocharging system – fault diagnosis chart
Sheet 4 of 5

Wastegate

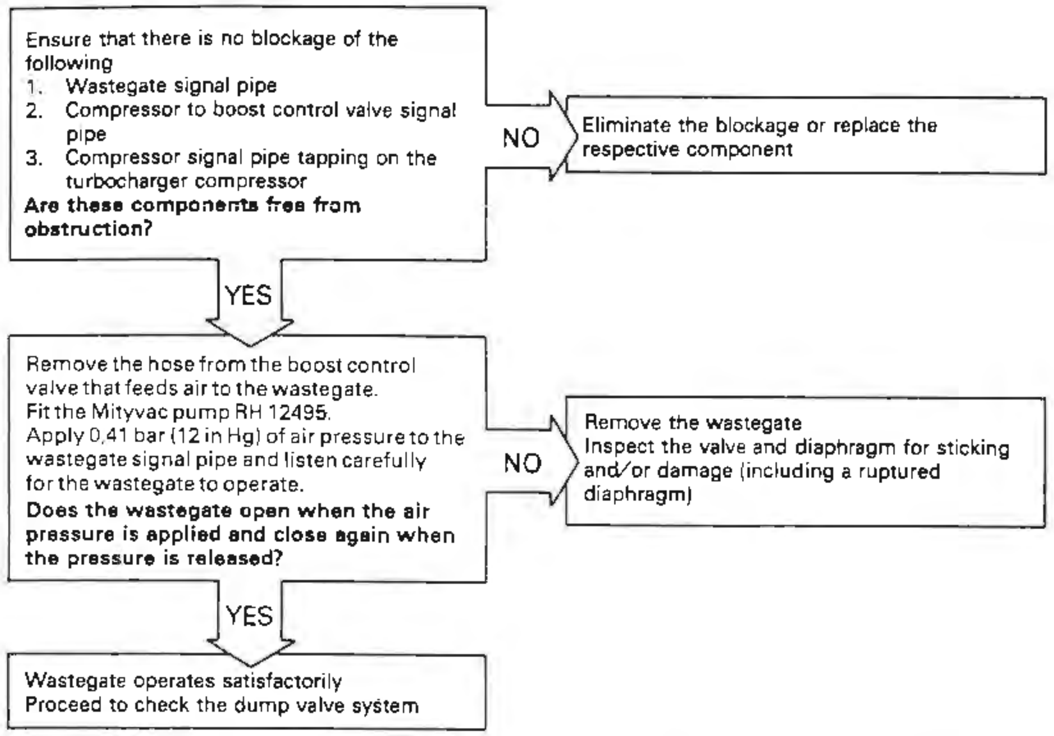

Ensure that there is no blockage of the following
1. Wastegate signal pipe
2. Compressor to boost control valve signal pipe
3. Compressor signal pipe tapping on the turbocharger compressor

Are these components free from obstruction?

Eliminate the blockage or replace the respective component

Remove the hose from the boost control valve that feeds air to the wastegate. Fit the Mityvac pump RH 12495. Apply 0,41 bar (12 in Hg) of air pressure to the wastegate signal pipe and listen carefully for the wastegate to operate. **Does the wastegate open when the air pressure is applied and close again when the pressure is released?**

Remove the wastegate
Inspect the valve and diaphragm for sticking and/or damage (including a ruptured diaphragm)

Wastegate operates satisfactorily
Proceed to check the dump valve system

Dump valve

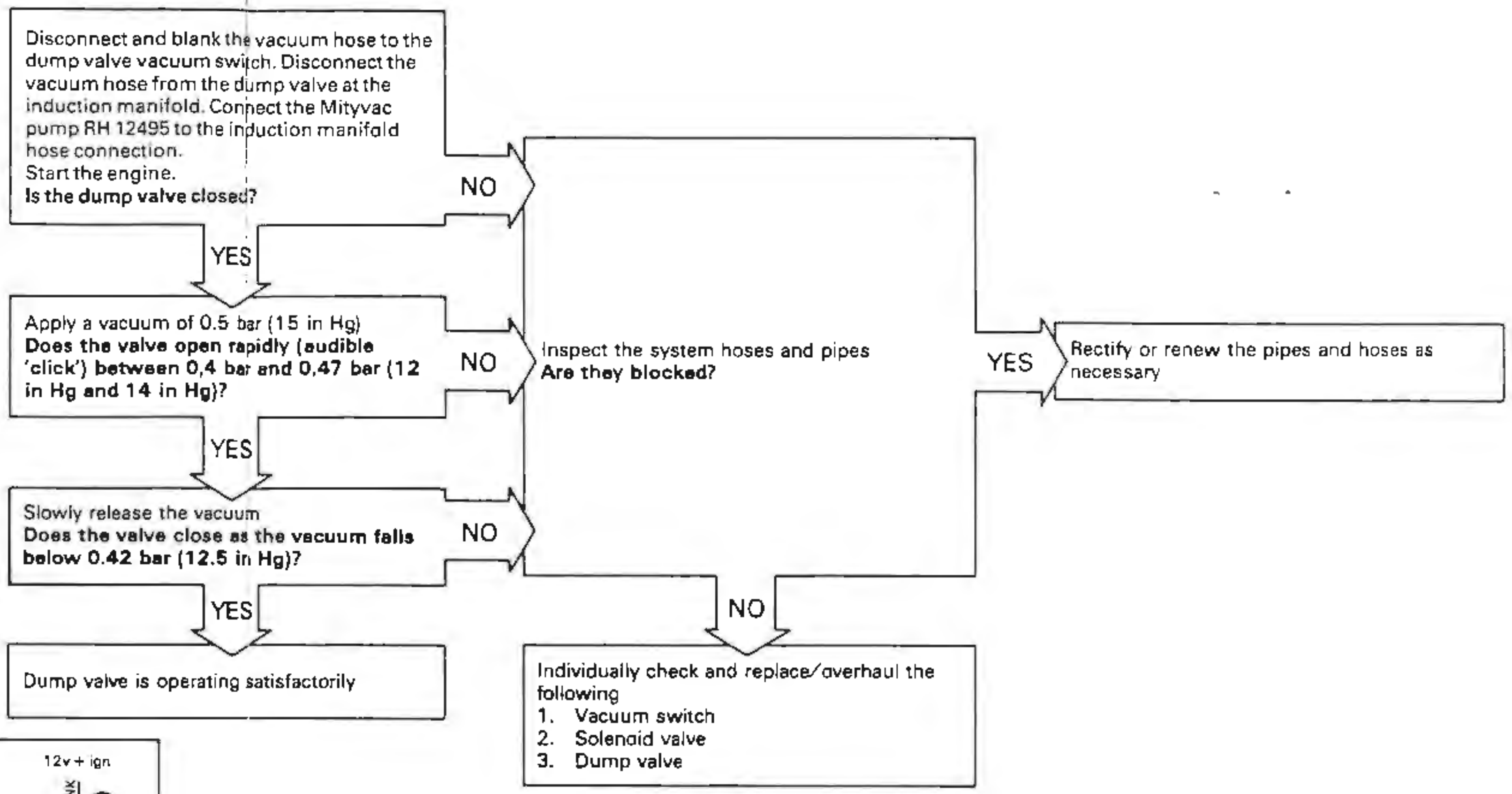

Disconnect and blank the vacuum hose to the dump valve vacuum switch. Disconnect the vacuum hose from the dump valve at the induction manifold. Connect the Mityvac pump RH 12495 to the induction manifold hose connection.
Start the engine.
Is the dump valve closed?

Apply a vacuum of 0.5 bar (15 in Hg) **Does the valve open rapidly (audible 'click') between 0,4 bar and 0,47 bar (12 in Hg and 14 in Hg)?**

Slowly release the vacuum
Does the valve close as the vacuum falls below 0.42 bar (12.5 in Hg)?

Dump valve is operating satisfactorily

Inspect the system hoses and pipes
Are they blocked?

Rectify or renew the pipes and hoses as necessary

Individually check and replace/overhaul the following
1. Vacuum switch
2. Solenoid valve
3. Dump valve

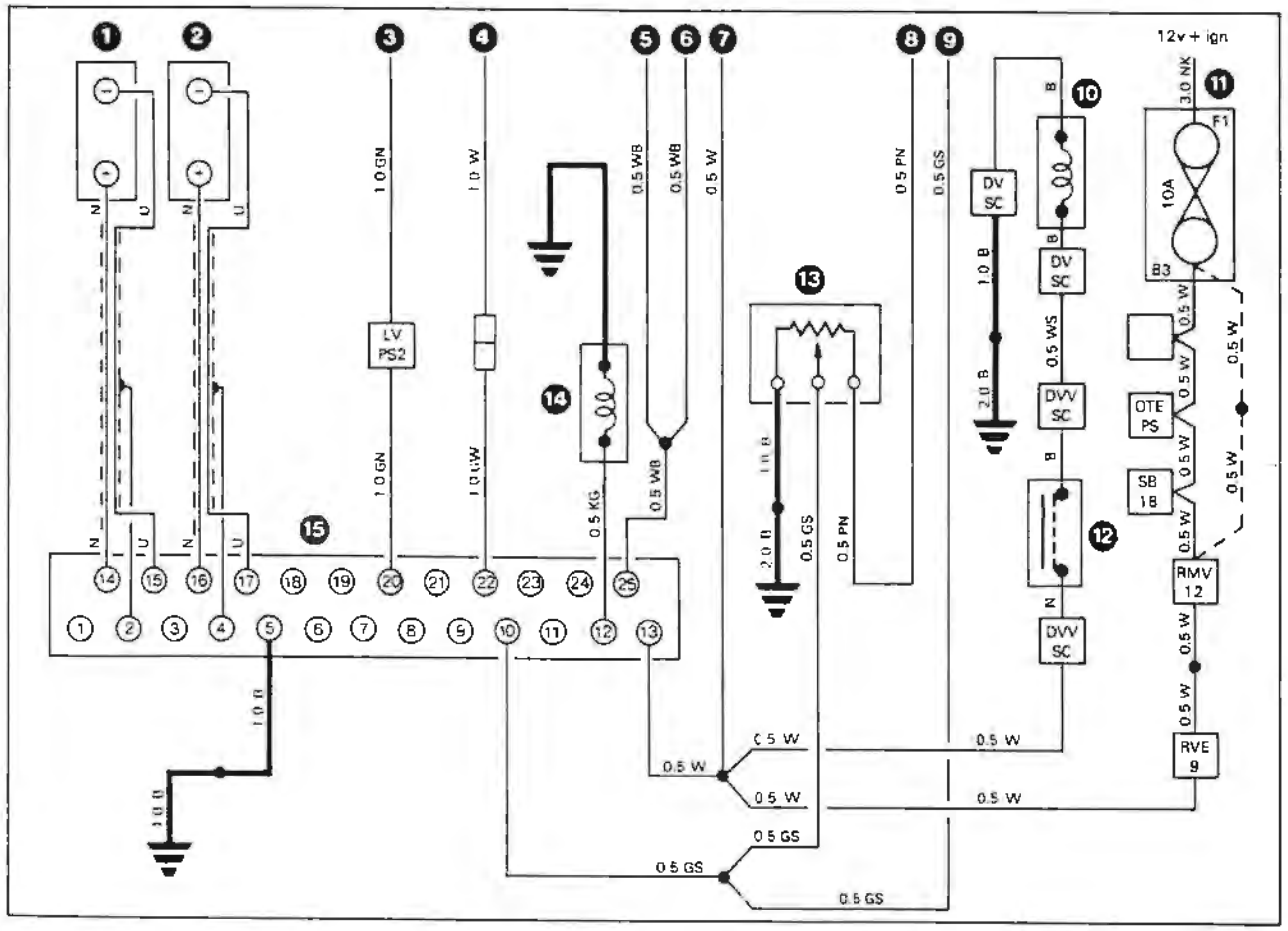

Wiring diagram

1 Knock sensor – A bank
2 Knock sensor – B bank
3 From braking system
4 From speed control system
5 From fuel injection system ECU
6 From ignition system ECU
7 To ignition system ECU
8 To fuel injection system ECU
9 To fuel injection system ECU
10 Purge control solenoid (if fitted)
11 Fuse
12 Purge control vacuum switch (if fitted)
13 Air pressure transducer
14 Boost control solenoid
15 Boost control system ECU

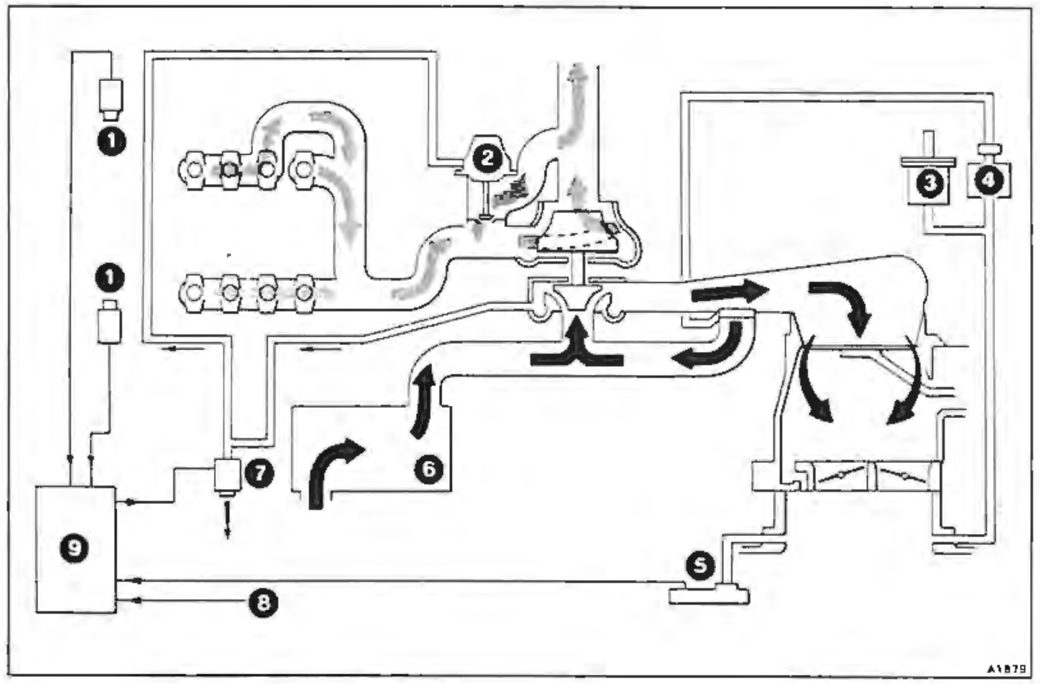

The turbocharging system

1 Knock sensor
2 Exhaust gas wastegate
3 Dump valve vacuum switch
4 Dump valve solenoid valve
5 Air pressure transducer
6 Air intake filter housing
7 Boost control solenoid valve
8 Ignition input signal (engine speed)
9 Electronic control unit (ECU)

Figure D2-9

Turbocharging system – fault diagnosis chart
Sheet 5 of 5

Brake lamps, Cruise control, and Knock sensors

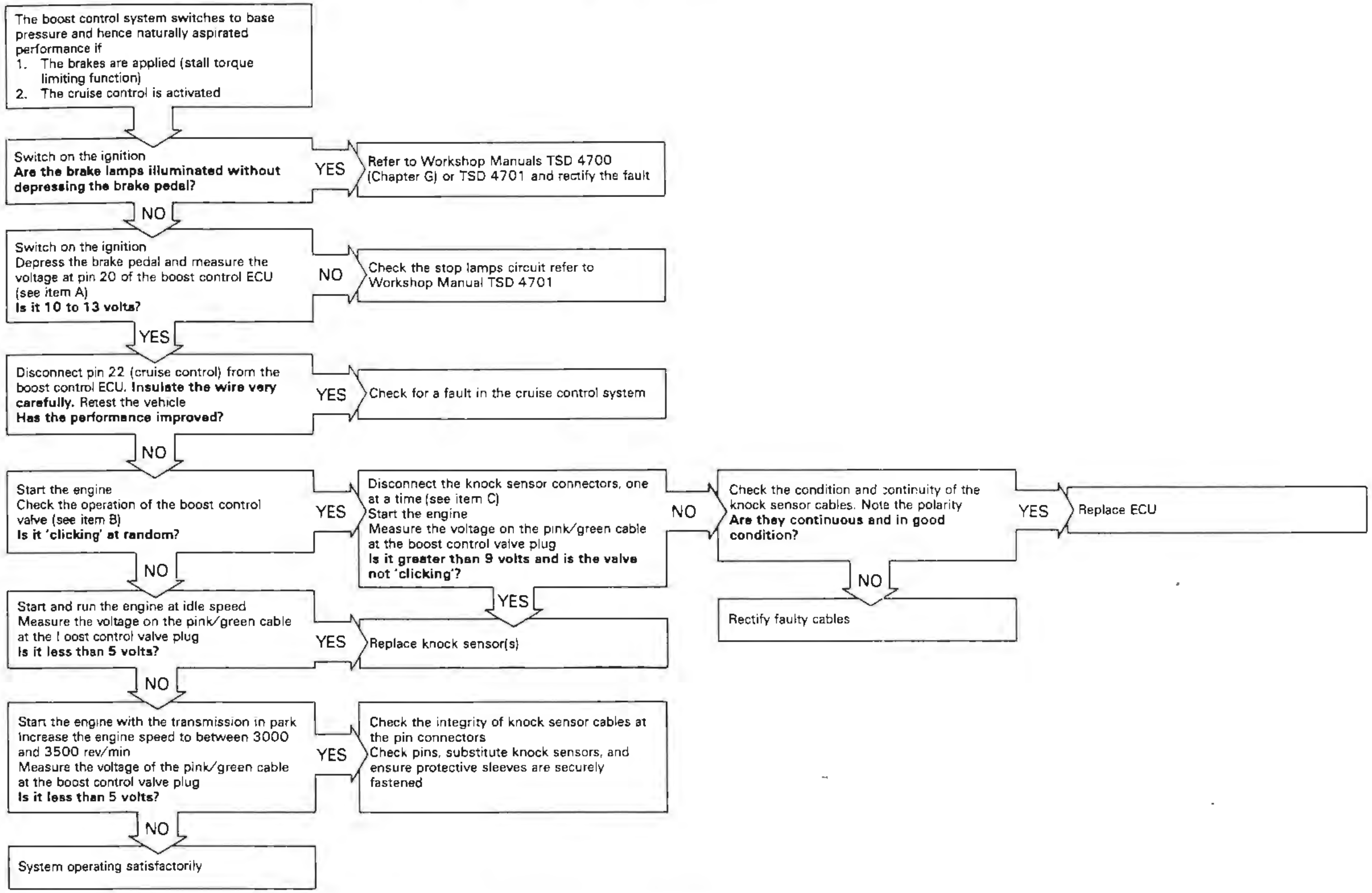

The boost control system switches to base pressure and hence naturally aspirated performance if
1. The brakes are applied (stall torque limiting function)
2. The cruise control is activated

Switch on the ignition
Are the brake lamps illuminated without depressing the brake pedal?

Refer to Workshop Manuals TSD 4700 (Chapter G) or TSD 4701 and rectify the fault

Switch on the ignition
Depress the brake pedal and measure the voltage at pin 20 of the boost control ECU (see item A)
Is it 10 to 13 volts?

Check the stop lamps circuit refer to Workshop Manual TSD 4701

Disconnect pin 22 (cruise control) from the boost control ECU. **Insulate the wire very carefully.** Retest the vehicle
Has the performance improved?

Check for a fault in the cruise control system

Start the engine
Check the operation of the boost control valve (see item B)
Is it 'clicking' at random?

Disconnect the knock sensor connectors, one at a time (see item C)
Start the engine
Measure the voltage on the pink/green cable at the boost control valve plug
Is it greater than 9 volts and is the valve not 'clicking'?

Check the condition and continuity of the knock sensor cables. Note the polarity
Are they continuous and in good condition?

Replace ECU

Rectify faulty cables

Start and run the engine at idle speed
Measure the voltage on the pink/green cable at the boost control valve plug
Is it less than 5 volts?

Replace knock sensor(s)

Start the engine with the transmission in park
Increase the engine speed to between 3000 and 3500 rev/min
Measure the voltage of the pink/green cable at the boost control valve plug
Is it less than 5 volts?

Check the integrity of knock sensor cables at the pin connectors
Check pins, substitute knock sensors, and ensure protective sleeves are securely fastened

System operating satisfactorily

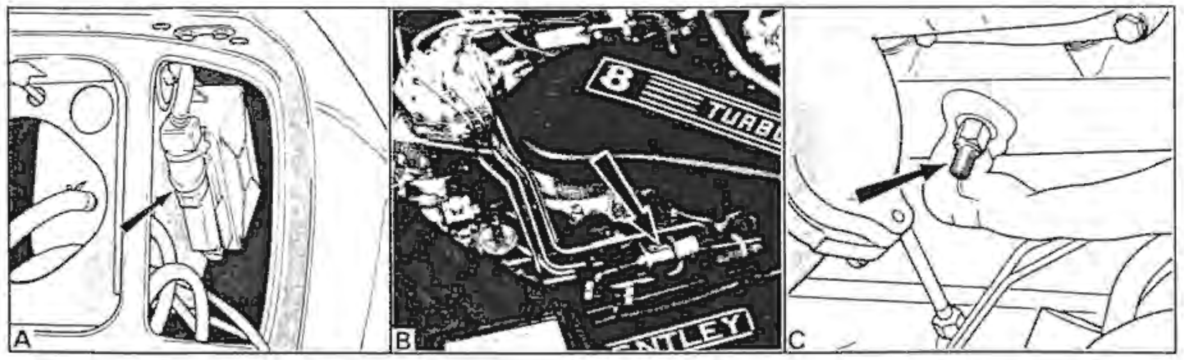

a. Slowly pour the engine oil into the feed port on top of the turbocharger and manually spin the compressor blades. Exercise care to ensure that the blades are not damaged.

b. Once the oil drains from the port on the bottom of the turbocharger, clean the joint face and fit both the gasket and oil return pipe.

c. Fill the turbocharger through the feed port and then clean the joint face and fit both the gasket and oil feed pipe.

Exhaust wastegate – To remove and fit
(see fig. D2-11)

1. Locate the boost pressure pipe connection on the side of the wastegate assembly. Unscrew the male pipe nut and withdraw the pressure pipe.
2. Unscrew the two setscrews securing the wastegate to the exhaust manifold. Collect the washers.
3. Withdraw the wastegate and collect the gasket.
4. Fit the wastegate by reversing the removal procedure, noting that the sealing ring fitted between the wastegate and exhaust manifold must be in good condition. Fit a new gasket.

For the remainder of the information relating to the exhaust system refer to Workshop Manual TSD 4700, Chapter Q.

Air dump valve (recirculation) pipe – To remove and fit

The recirculation pipe is an integral part of the cast intake assembly.

1. Unscrew the worm drive clip securing.

a. the main intake hose to the cast intake assembly.

b. the hose from the air dump valve to the metal pipe.

c. the hose from the crankcase breather to the metal pipe.

Twist each hose to free the joint.

2. Unscrew the intake assembly retaining nut and collect the washer (see fig. D2-12).
3. Withdraw the pipe assembly.
4. Fit the pipe assembly by reversing the procedure, ensuring that the hoses are in good condition.

Air dump valve – To remove and fit

1. Unscrew the hose clamps securing the two flexible hoses to their respective connections on the bottom of the dump valve (see fig. D2-14).
2. Remove the cast engine air intake elbow (refer to Chapter B, Section B3, Mixture control unit assembly – To remove and fit, Operations 2 to 6 inclusive).
3. Invert the cast elbow.
4. Unscrew the three setscrews retaining the dump valve. Collect the washer fitted under the head of each setscrew.
5. Withdraw the dump valve assembly.
6. Fit the dump valve by reversing the procedure, ensuring that the gasket is in good condition.

Air dump valve – To dismantle, inspect, and assemble (see fig. D2-5)

1. Remove the dump valve from the cast air intake elbow.

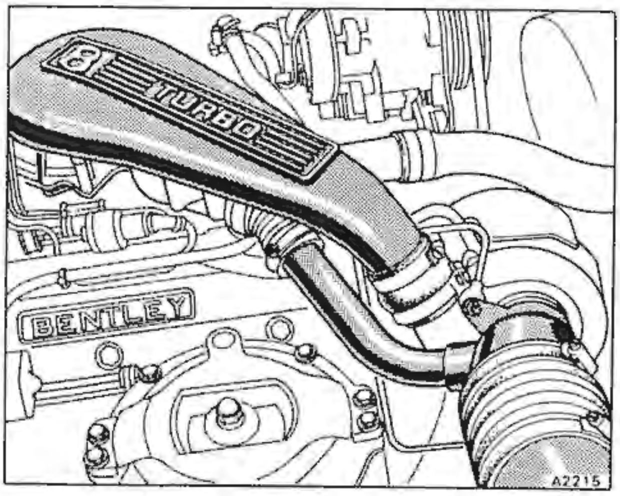

Fig. D2-10 Turbocharger and inlet pipes

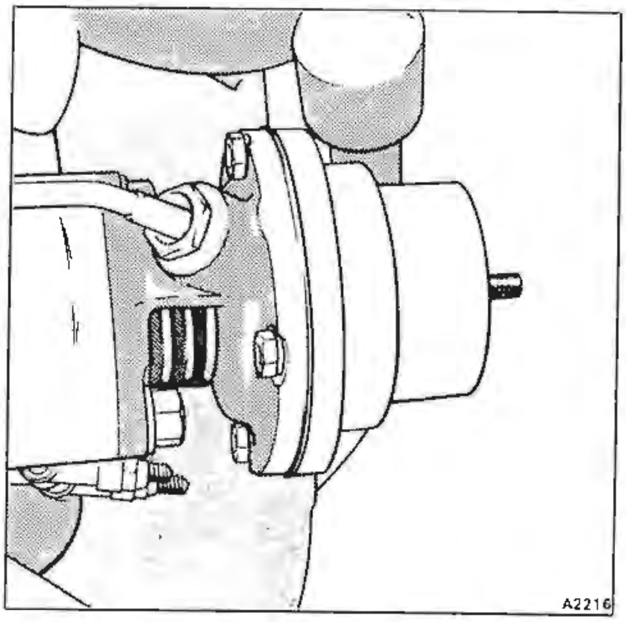

Fig. D2-11 Exhaust wastegate

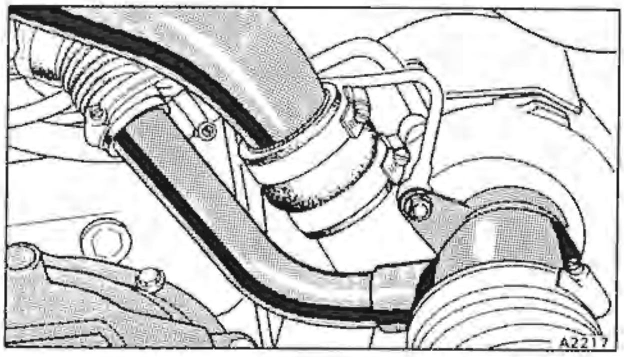

Fig. D2-12 Air dump valve pipe

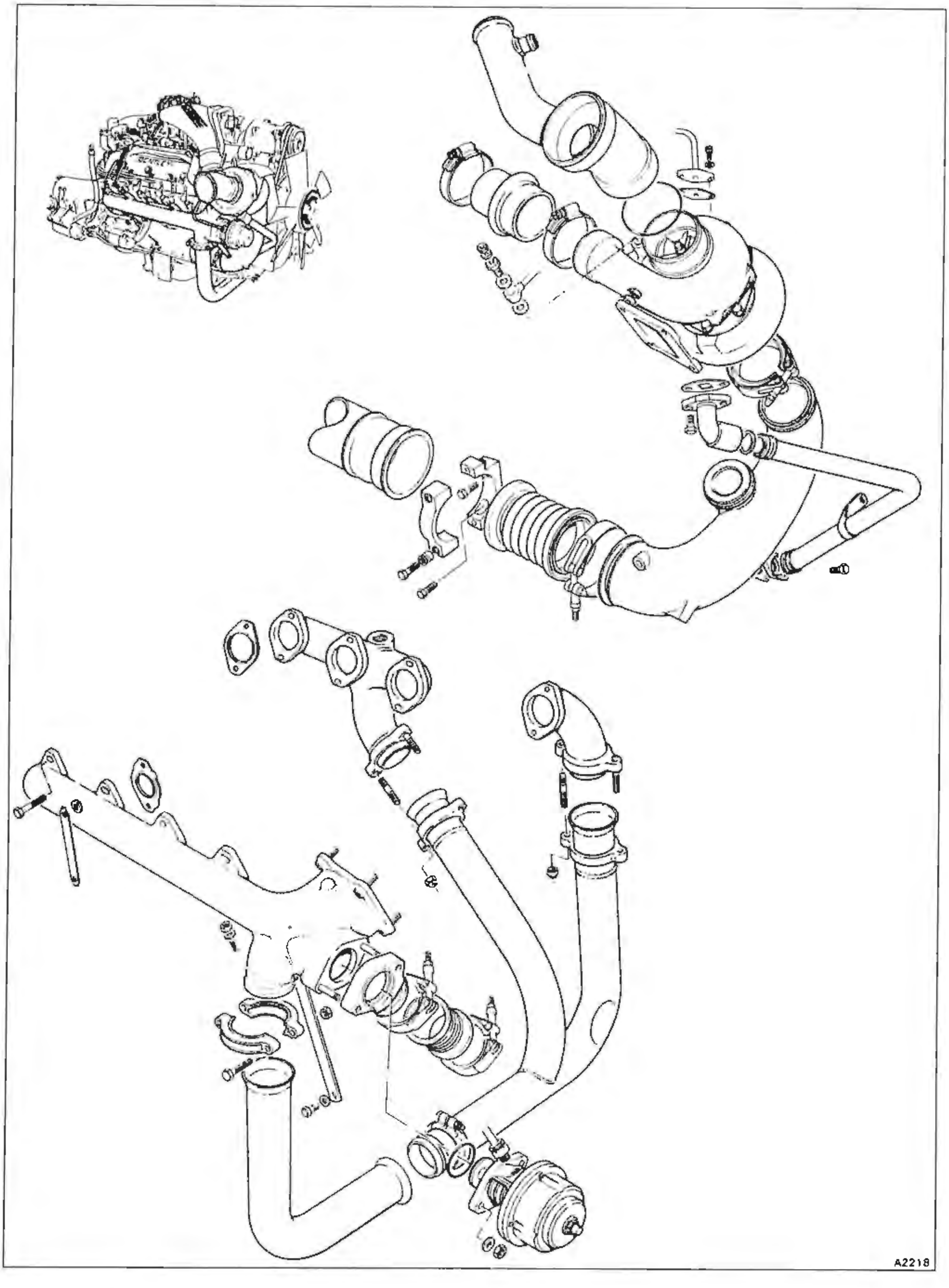

Fig. D2-13 Turbocharger and exhaust fittings

2. Collect the rubber sealing ring.
3. Unscrew the two Allen screws retaining the circular end plate to the assembly. Collect the gasket.
4. Unscrew the two through setscrews from the base of the dump valve. Collect the washer from each setscrew.
5. Withdraw the valve from the casting.
6. Unscrew the four setscrews situated around the diaphragm retaining ring.
7. Unscrew the nut from the centre through bolt. Collect the washer.
8. Lift off the seal assembly, diaphragm, spring guide, spring, and base washer.
9. Withdraw the through bolt, guide, and washer from the valve housing.
10. Clean the parts and examine the rubber diaphragm, body sealing ring, and the valve seal assembly plate.
11. Assemble the components by reversing the dismantling procedure.

Air dump valve vacuum switch and solenoid – To remove and test (see fig. D2-5)
This solenoid and switch are fitted adjacent to the air potentiometer on the mixture control unit. Take care when identifying these components on cars produced to a Middle East specification, as the purge control system solenoid and switch are also fitted in this area (refer to Chapter G).

Vacuum switch – To remove and fit
1. Unscrew the vacuum signal hose clamp screw situated adjacent the switch. Twist the hose to free the joint.
2. Disconnect the electrical connections to the switch, at the 4-way connection. This block is situated between the air potentiometer (mixture control unit) and the dump valve solenoid.

Note The connection block is usually clipped together with the connection block for the solenoid valve.

3. Carefully prise the shakeproof securing washer from the cylindrical body of the switch, below the mounting bracket.
4. Lift the switch from the mounting bracket.
5. Fit the switch by reversing the dismantling procedure.

Vacuum switch – To test
1. Locate the switch electrical connection block and connect a digital multimeter between the brown cable and earth.
2. Slacken the vacuum switch signal hose clamp screw and withdraw the hose. Connect the Mityvac pump RH 12495 to the connection on the switch.
3. Switch on the ignition noting that the reading on the multimeter is between 8 volts and 15 volts.
4. Operate the vacuum pump and apply a vacuum to the switch. The meter should read zero when the reading on the gauge is between 317,50 mm Hg and 381,0 mm Hg (12.50 in Hg and 15 in Hg).
5. Slowly release the vacuum, noting that the meter again reads between 8 volts and 15 volts before the vacuum drops below 317,50 mm Hg (12.50 in Hg).

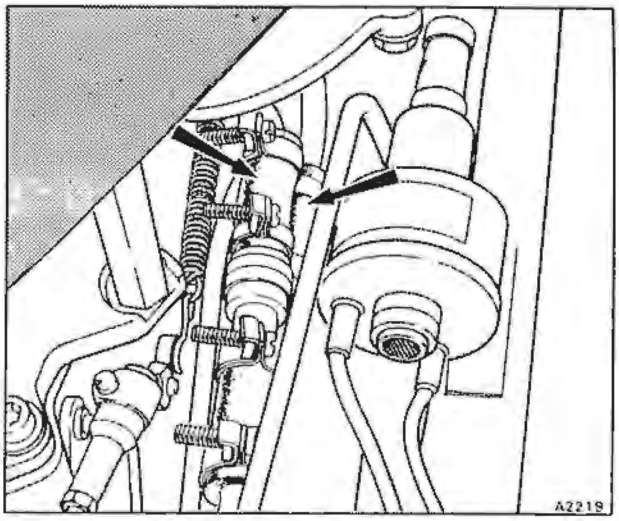

Fig. D2-14 Dump valve signal hoses

6. If the operation of the switch is suspect, it should be renewed.

Solenoid valve – To remove and fit
1. Disconnect the inlet and outlet hoses from the solenoid valve.
2. Disconnect the electrical connections to the solenoid valve at the 2-way connection block. This block is situated between the air potentiometer (mixture control unit) and the solenoid valve.

Note The connection block is usually clipped together with the connection block for the vacuum switch.

3. Remove the two nuts, washers, and bolts fitted on either side of the solenoid valve.
4. Withdraw the solenoid valve from the mounting bracket.
5. Fit the solenoid valve by reversing the dismantling procedure.

Solenoid valve – To test
1. Disconnect electrical connections to the solenoid valve at the 2-way connection block. This block is situated between the air potentiomer (mixture control unit) and the solenoid valve.

Note The connection block is usually clipped together with the connection block for the vacuum switch.

2. Slacken the hose clamp screws on the solenoid inlet and outlet connections. Twist each hose to free the joint. Withdraw the two hoses.
3. Connect a suitable length of hose to the front connection on the solenoid and blow down the open end of the hose. It **should be** possible to blow through the solenoid valve.
4. Connect a 12 volt supply to the solenoid. Note that it **should not be** possible to blow down the hose when the solenoid is energized.

Note If the solenoid valve is fitted to the car for this test, exercise care to eliminate the possibility of an electrical spark.

Boost control ECU – To remove and fit
(see fig. D2-6)

1. Disconnect the battery.
2. Remove the front left-hand flasher and side lamp assembly (refer to Workshop Manual TSD 4701).
3. Disconnect the multi-pin plug from the ECU.

Note Do not finger the ECU terminal pins.

4. Unscrew the setscrews securing the engine cooling system expansion bottle to the wing valance. Carefully manoeuvre the expansion bottle into the engine compartment to gain access to the ECU securing screws.
5. Unscrew the three self-tapping screws that retain the ECU to the wing valance.

   Support the ECU before the last securing screw is removed.
6. Withdraw the ECU through the front flasher and side lamp wing aperture.
7. Collect the three screw clips from the ECU.
8. Fit the ECU by reversing the removal procedure.

Air pressure transducer (APT) – To remove and fit

1. Disconnect the electrical plug at the APT.
2. Unscrew the metal pipe nut from the adapter on the APT.
3. Unscrew the two mounting screws and withdraw the APT.
4. Fit the assembly by reversing the removal procedure.

Engine knock sensors– To remove and fit

1. Locate the sensor mounted half-way along the crankcase on each side.
2. Detach the electrical plug from the end of the sensor.
3. Unscrew the sensor from the crankcase.
4. Fit the sensors by reversing the removal procedure. Ensure that the heat resistant sleeves fitted to protect each sensor cable, are in good condition and satisfactorily clipped along their entire length.

Turbocharging system

Basic principle of operation (see fig. D3-2)
The turbocharger is designed to increase the power and torque of the engine under certain operating conditions. Increased engine load and throttle plate opening, increases exhaust gas flow rate. The turbocharger turbine utilizes this energy and generates a positive induction manifold pressure (boost) via the turbocharger compressor.

Increased air density which results from compressing the inlet charge produces higher engine power and torque.

The size of the turbocharger has been chosen to ensure optimum torque at low engine speeds. However, without accurate control this would result in excessive boost pressure and subsequent engine damage under certain operating conditions.

To overcome this situation a wastegate is fitted into the exhaust system between the engine and the turbocharger.

Operation of the wastegate is controlled by the boost control ECU. This unit receives information from the two knock sensors (detonation), the K-Motronic ECU (engine speed), and an air pressure transducer (monitoring induction manifold pressure).

When certain conditions are sensed by the boost control ECU, it signals the boost control valve to open. The resultant build-up of signal pressure is then applied to the wastegate diaphragm. Any reduction of induction manifold pressure required by the boost control ECU is achieved by wastegate control.

At a pre-set pressure the wastegate opens and allows a proportion of exhaust gas to by-pass the turbocharger. This ensures that engine power output is safely regulated under all operating conditions.

To prevent surging of the turbocharger compressor when the throttles are suddenly closed, a dump valve is fitted into the cast air intake elbow. This assembly allows the inlet air to be recirculated from the air intake system to the compressor and relieves the boost pressure when the throttles are closed.

When the throttles are opened the dump valve is closed and boost pressure is rapidly applied to the engine.

Description of the components
This section relates to control systems and components that operate the basic turbocharging system and comprise the following.
Turbocharger assembly
Wastegate
Dump valve

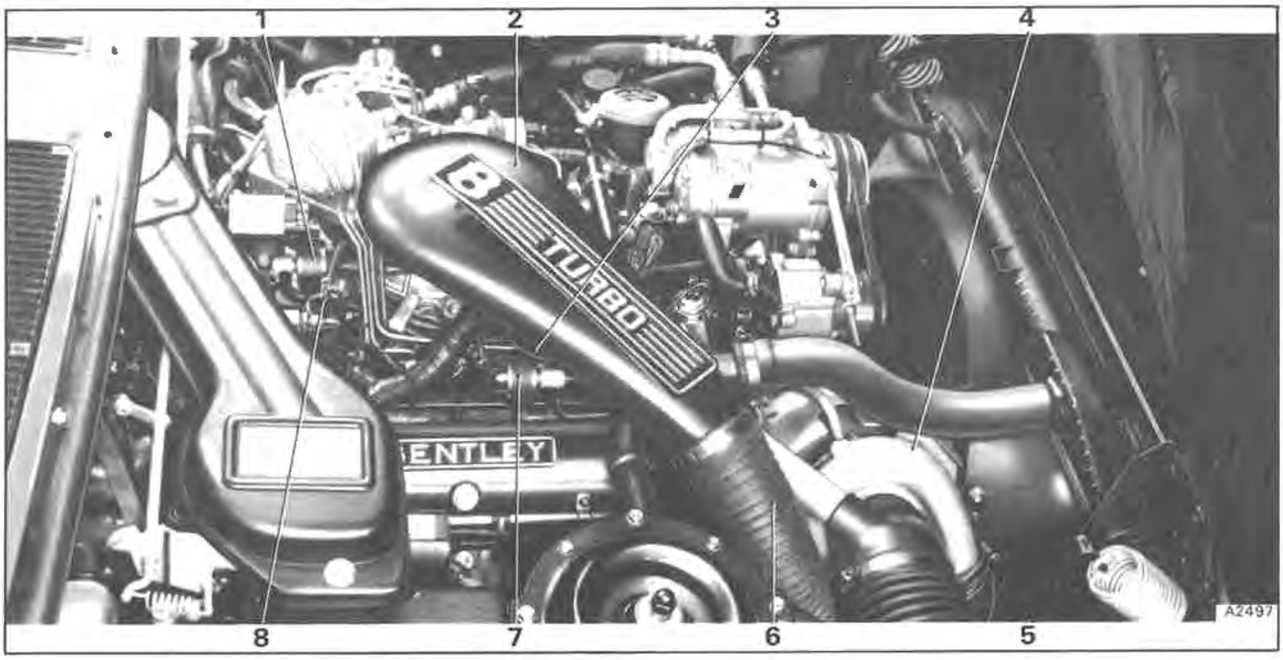

Fig. D3-1 Engine compartment details
1 Dump valve solenoid valve
2 Cast air intake elbow
3 Dump valve assembly (partially hidden)
4 Turbocharger assembly
5 Connection to intercooler
6 Connection from intercooler
7 Boost control solenoid valve
8 Dump valve vacuum switch

Dump valve vacuum switch and solenoid
Boost control ECU
Boost control valve
Knock sensors
Air pressure transducer
Intercooler (refer to Chapter J)

Turbocharger (see fig. D3-3)
The turbocharger is basically an air pump driven by the exhaust gas. The main components are the exhaust turbine, the shaft, the compressor, and the centre housing assembly.

The turbine and compressor are mounted at opposite ends of the same shaft which is supported in plain bearings within the centre housing. The compressor is contained within an aluminium alloy housing and the exhaust turbine within the cast iron housing. Both housings are bolted to the centre housing and the complete assembly is mounted via the turbine flange to the exhaust manifold.

The plain bearings that support the shaft have floating bushes which are lubricated by pressurized engine oil. The oil is also used to cool both the bearings and the centre housing assembly.

Oil seals are fitted at either end of the shaft to prevent oil leakage into the turbine or compressor housings.

Do not use an exhaust extraction system on the vehicle. Failure to observe this caution may result in a temporary leak from the turbocharger oil seal arrangement. This leak may continue for some time after the extraction equipment has been removed and result in the emission of smoke from the exhaust tailpipe.

Exhaust gas wastegate (see fig. D3-4)
The exhaust gas wastegate is used to control the boost pressure by regulating the flow of exhaust gas to the turbocharger turbine. This controls the energy available for compressing inlet air.

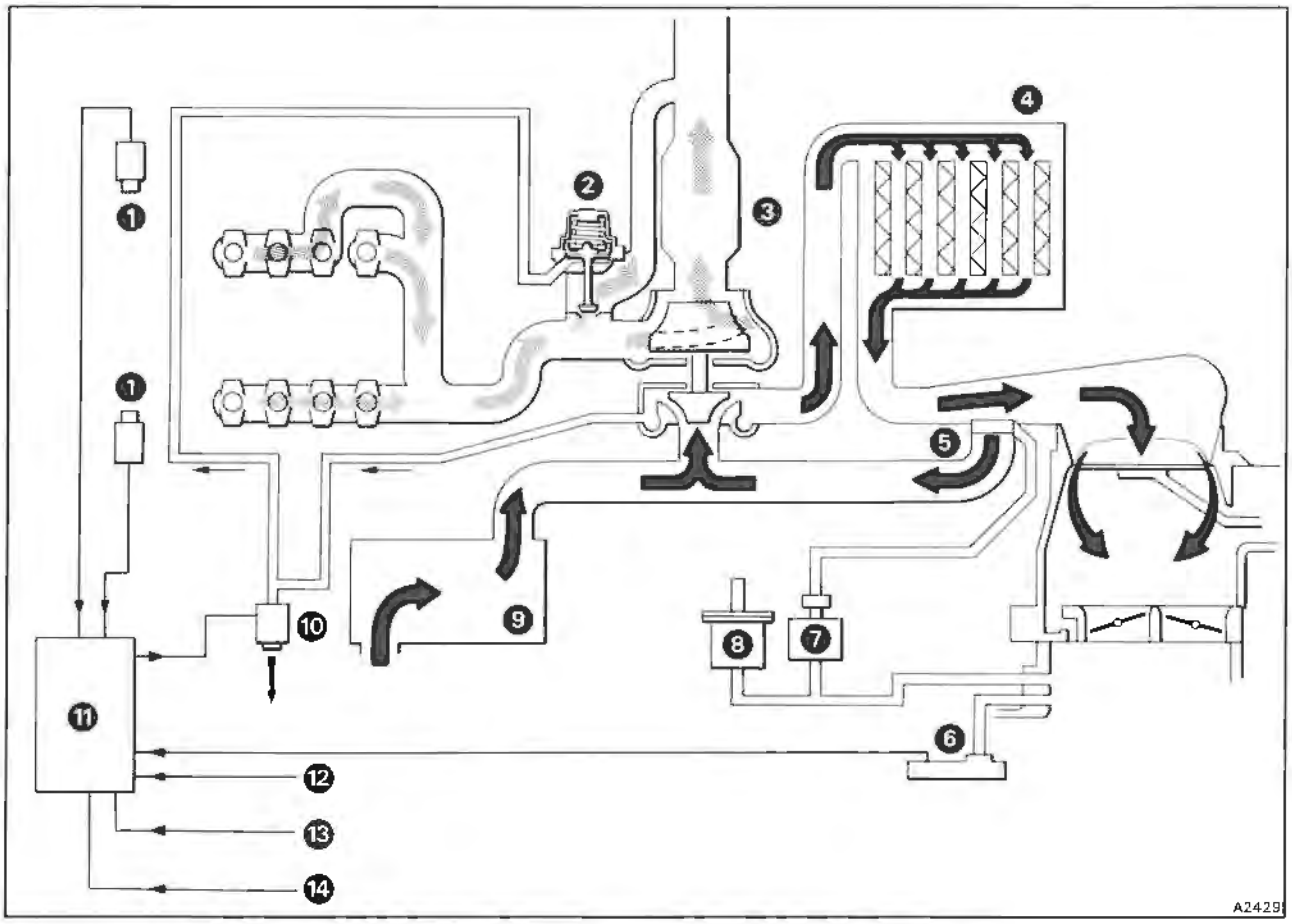

Fig. D3-2 The turbocharging system
1 Knock sensor
2 Wastegate
3 Warm-up catalytic converter
4 Intercooler
5 Dump valve
6 Air pressure transducer
7 Dump valve solenoid
8 Dump valve vacuum switch
9 Air intake filter housing
10 Boost control solenoid
11 Boost control ECU
12 K-Motronic ECU
13 Braking system
14 Speed control system

The boost pressure is taken from a tapping at the end of the turbocharger compressor volute and acts on a diaphragm connected to the wastegate valve. As the boost pressure rises, the diaphragm acts against a spring and at a predetermined pressure the valve lifts off its seat, controlling exhaust gas flow and thus limiting the boost pressure.

The boost pressure signal to the wastegate is vented to atmosphere by the boost control valve. This solenoid valve is unenergized in the closed position. When it receives a signal from the electronic control unit (ECU) the solenoid valve opens and allows pressure to build-up in the wastegate, by venting signal pressure to atmosphere.

Dump valve (see fig. D3-5)
The manifold depression operated dump valve is situated in the cast air intake elbow. At low engine loads [manifold vacuum greater than 368,30 mm Hg (14.5 in Hg)] it allows compressed air to recirculate through the intake system and back into the compressor.

At higher engine loads the dump valve closes (due to a fall in the manifold depression) and pressure builds-up in the induction system, increasing part throttle engine power and improving throttle progression.

A solenoid valve operated by a vacuum switch, connects the dump valve to atmospheric pressure whenever the inlet manifold vacuum is less than 368,30 mm Hg (14.5 in Hg) and allows the dump valve to close.

When the vacuum switch and solenoid are de-energized [inlet manifold vacuum greater than 368,30 mm Hg (14.5 in Hg)], the solenoid connects the dump valve to the inlet manifold vacuum which in turn, draws the valve open.

The dump valve also acts as a relief valve if the boost pressure exceeds approximately 0,59 bar (8.5 lbf/in^2, 439,50 mm Hg, 17.30 in Hg).

Boost control (see fig. D3-6)
This system is controlled by an electronic control unit (ECU) situated behind the front flasher lamp on the left-hand side of the vehicle.

The function of the unit is to interpret electrical signals received from the K-Motronic engine management ECU (engine speed), the two knock sensors (detonation), and an air pressure transducer (monitoring induction manifold pressure).

The boost control solenoid valve regulates the wastegate position and thus induction manifold pressure, in response to boost control ECU output.

Boost inhibit
This system prevents the build-up of boost pressure when the vehicle is stationary with the brakes applied, the transmission is in drive range, and the accelerator pedal depressed.

When the ECU senses that the above conditions prevail, it signals to close the boost control solenoid. The resulting build-up of pressure in the control line, opens the wastegate and prevents a build-up of the main boost pressure.

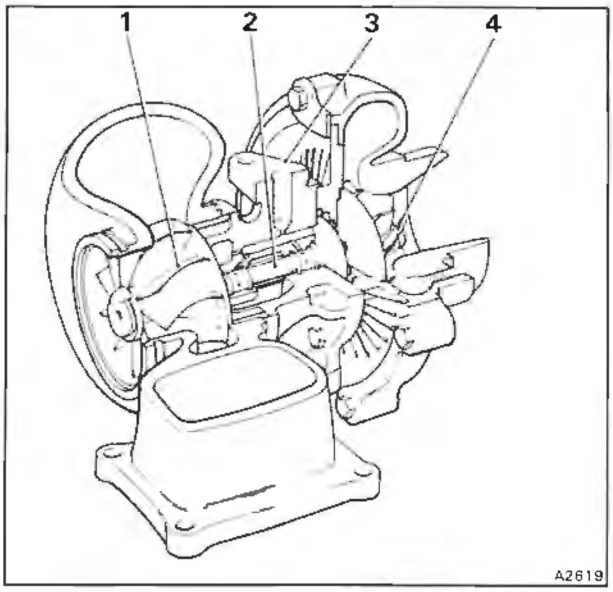

Fig. D3-3 The turbocharger assembly
1 Exhaust turbine
2 Shaft
3 Centre housing
4 Intake compressor

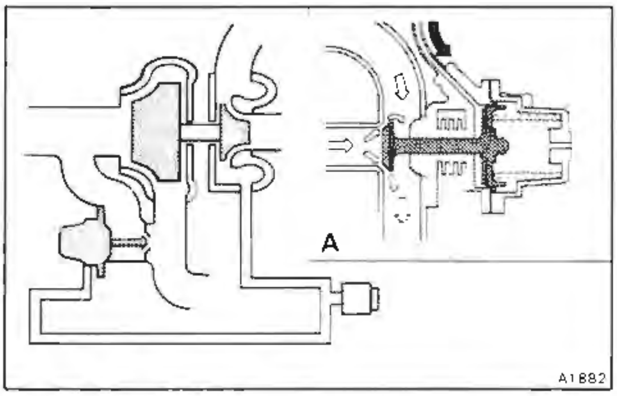

Fig. D3-4 Exhaust gas wastegate and control system

Engine knock sensors
A knock sensor is fitted between cylinders two and three of both 'A' bank and 'B' bank.

The sensor is a piezo-electric accelerometer which produces a small voltage output with engine vibration. This voltage output increases significantly if detonation is present.

The output signal is processed by the boost control electronic control unit which then decides if detonation is present.

If detonation is present the ECU signals to the boost control solenoid to progressively close, reducing induction manifold pressure until detonation is eliminated. When the ECU detects that detonation has ceased it signals the boost solenoid to re-open, gradually restoring the induction manifold pressure to its correct value.

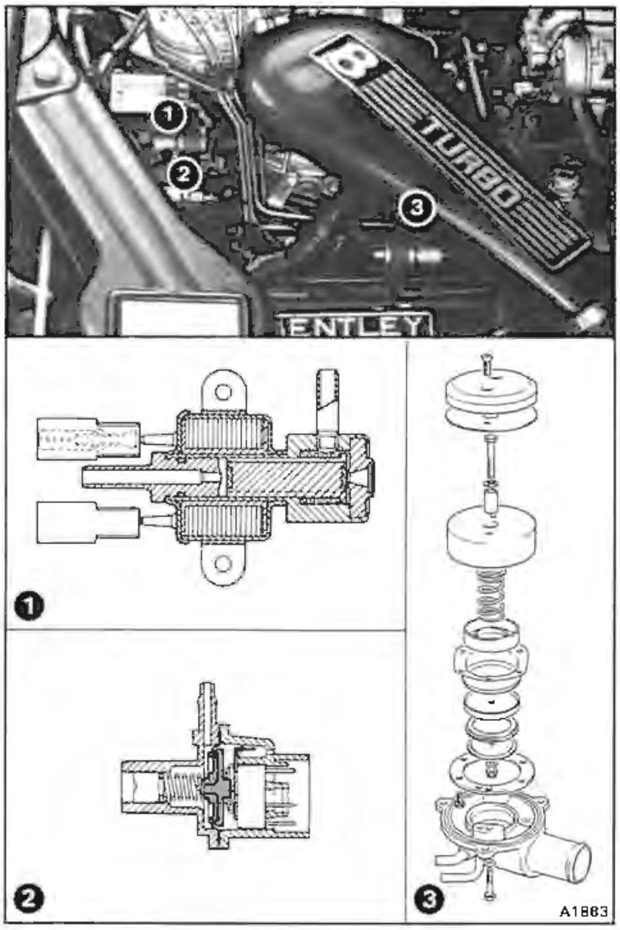

Fig. D3-5 Dump valve and control system

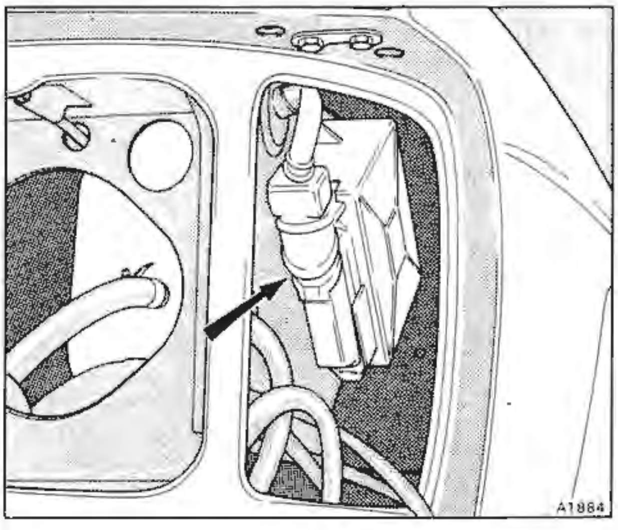

Fig. D3-6 Boost control electronic control unit (ECU)

Air pressure transducer (see fig. D3-7)
The air pressure transducer is a cast aluminium block mounted on the speed control actuator at the rear of 'A' bank cylinder head.

The unit monitors induction manifold pressure and relays this as a voltage to the boost control system.

Modes of operation

This section comprises a brief description of the operating modes for the system.

Engine light load operation
With a small throttle opening and low engine speed the inlet manifold depression is high. Therefore, the dump valve vacuum switch de-energizes the solenoid valve and allows the inlet manifold depression to open the dump valve.

The inlet air delivered by the turbocharger compressor to the air intake elbow is allowed to return to the compressor via the dump valve. Under these conditions there is no turbocharging effect and the engine operates in the 'conventional' naturally aspirated manner.

Engine part throttle operation (with boost)
When the throttles are partially opened, the inlet manifold depression will fall below 368,30 mm Hg (14.5 in Hg). Therefore, the dump valve vacuum switch energizes the solenoid valve and closes the dump valve by venting it to atmosphere.

When the dump valve closes pressure in the induction manifold builds-up to a maximum of approximately 0,48 bar (7 lbf/in^2, 361,97 mm Hg, 14.25 in Hg), dependent upon the throttle openings, producing a correspondingly higher engine power output.

The boost pressure is also conveyed from the turbocharger compressor to the exhaust gas wastegate assembly via the boost control solenoid valve. At low loads this valve is open venting the signal pressure to atmosphera. However, as the engine load increases the electronic boost control unit (ECU) signals to close the solenoid to atmosphere, increasing the pressure in the signal line which in turn applies a larger force on the wastegate diaphragm.

At a predetermined pressure the wastegate valve lifts off its seat. This allows a proportion of the exhaust gas to by-pass the turbocharger turbine limiting the power driving the turbocharger compressor. This action regulates the boost pressure.

If, due to malfunction, the boost pressure is not limited in the manner described, the dump valve will act as a relief valve when the pressure approaches approximately 0,59 bar (8.5 lbf/in^2, 439,50 mm Hg, 17.30 in Hg).

Engine full load operation
With the throttles fully opened, the inlet manifold depression is below the setting required to keep the dump valve open. Therefore, the vacuum switch

activates the solenoid which vents the dump valve to atmosphere, closing the valve.

Boost pressure from the turbocharger builds-up in the induction manifold and the turbocharging effect is evident with increased engine power.

The turbocharger boost pressure is also fed to the exhaust gas wastegate assembly. As the signal pressure increases the valve is lifted further from its seat and allows more exhaust gas to by-pass the turbocharger turbine. This limits the boost pressure.

If a malfunction of a component results in excessive boost pressure, the dump valve will operate as a relief valve at approximately 0,59 bar (8.5 lbf/in^2, 439,50 mm Hg, 17.30 in Hg).

A knock sensor is fitted to each bank of engine cylinders. The sensors produce a signal which is fed to the boost control ECU for processing.

If detonation is present the ECU signals to the boost control solenoid valve to close. This allows boost control signal pressure to be exerted on the wastegate diaphragm, to open the wastegate.

The speed of the turbocharger rotor is therefore limited by the operation of the wastegate.

Servicing

The information contained in this section includes
Basic system fault finding chart.
System test procedures flow charts.
Mechanical components assembly sequence.
Components removal and fitting procedures.

If a fault cannot be clearly defined, it is suggested that the following procedure is carried out before any involved fault diagnosis work is undertaken.

The procedure should be adhered to otherwise, an incorrect diagnosis may be made which could result in both lengthy and costly repairs.

Procedure

1. Check the K-Motronic controlled **ignition system** and **fuel injection system**, carry out the functional checks detailed in Chapter B.

If the car is fitted with catalytic converters, carry out an 'on-board' fault diagnosis check (refer to Chapter B). The resulting blink code will assist any diagnosis work.

2. Ensure that the exhaust emission CO reading is correct, refer to Chapter B.

If the exhaust CO reading is incorrect, carry out a compression test on the engine cylinders before adjusting the mixture strength.

Note Inhibit the operation of the fuel injection and ignition control systems during this test by disconnecting the multi-plug from the K-Motronic ECU.

Engine cylinder compression pressure 9,66 bar (140 lbf/in^2) minimum @ cranking speed
Variation between cylinders must not exceed 1,034 bar (15 lbf/in^2)

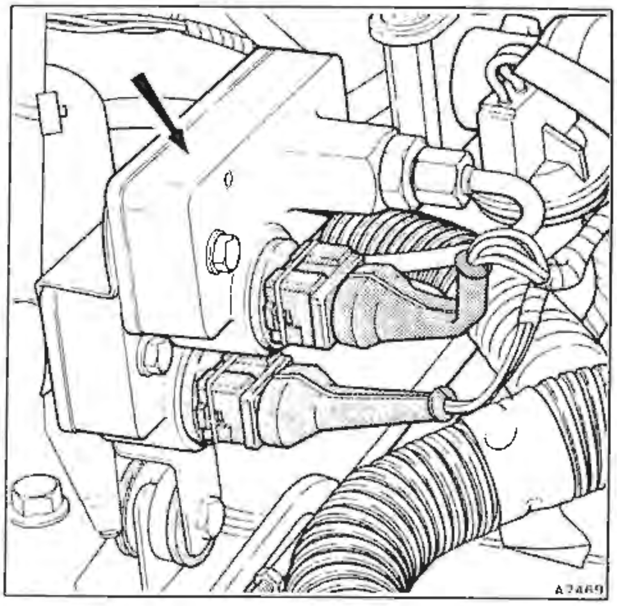

Fig. D3-7 Air pressure transducer

3. Carry out the turbocharging system flow chart test procedures.

Removal and fitting of components

When removing any parts always blank off the open connections immediately to prevent the ingress of dirt.

Turbocharger assembly – To remove and fit

1. Ensure that the usual workshop safety procedures are carried out.
2. Drain the coolant and remove the top hose, refer to TSD 4700, Chapter L.
3. Remove the air injection pump (if fitted), refer to Chapter F.
4. Remove the air dump valve (recirculation) pipe, refer to this chapter.
5. Locate the air hose connecting the turbocharger to the intercooler assembly. Unscrew the worm drive clip securing this hose to the turbocharger. Free the joint.
6. Unscrew the banjo bolt from the pressure tapping on the end of the turbocharger compressor casing. Free the joint and collect the aluminium washer from both sides of the pipe joint faces.
7. Unscrew the two setscrews retaining the large heatshield to the top of the turbocharger assembly.
8. Unscrew the nut and collect the washer from the lower timing cover stud, that retains the large heatshield lower mounting bracket.
9. Carefully withdraw the heatshield.
10. Unscrew the two Allen screws securing the oil feed pipe to the top of the turbocharger.
11. Unscrew the banjo bolt securing the bottom joint of the oil feed pipe to the crankcase.
12. Free the oil feed pipe.
13. On cars fitted with catalytic converters, unscrew

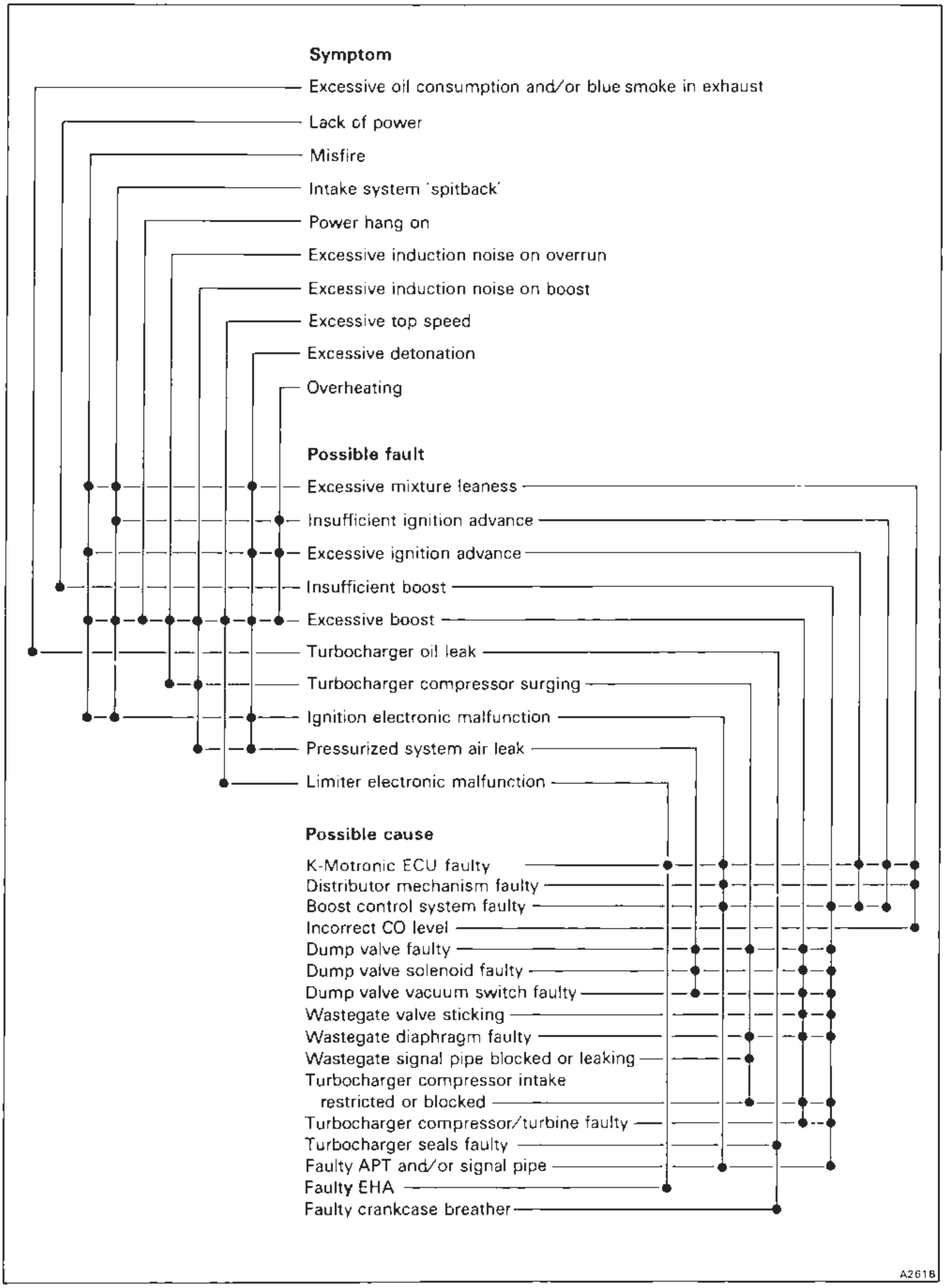

Fig. D3-8 Basic turbocharging fault diagnosis chart

Figure D3-9

Turbocharging system – fault diagnosis chart
Sheet 1 of 5

Preliminary checks and conditions

Possible cause	Poor performance (general)	Poor performance (intermittent)	Excessive performance	Misfire	Overboosting	Detonation	Surging [113 km/h to 144 km/h (70 mile/h to 90 mile/h)]
Knock sensors	●	●					●
Air pressure transducer	●				●	●	
Boost control valve	●	●	●	●	●		
Stall torque limiter – brakes	●						
Wastegate	●				●	●	
Turbocharger	●		●		●	●	
Dump valve	●				●		●

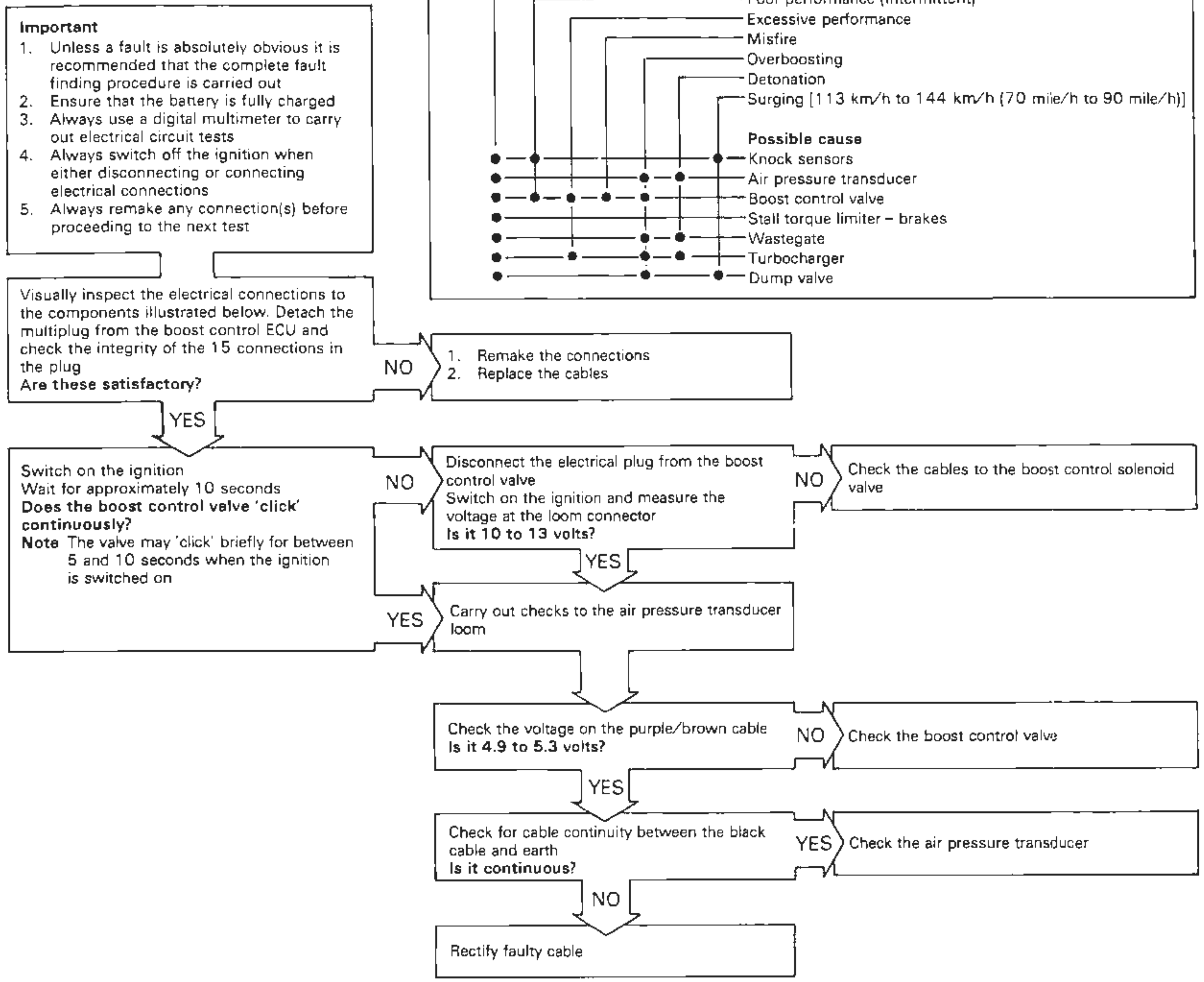

Important
1. Unless a fault is absolutely obvious it is recommended that the complete fault finding procedure is carried out
2. Ensure that the battery is fully charged
3. Always use a digital multimeter to carry out electrical circuit tests
4. Always switch off the ignition when either disconnecting or connecting electrical connections
5. Always remake any connection(s) before proceeding to the next test

Visually inspect the electrical connections to the components illustrated below. Detach the multiplug from the boost control ECU and check the integrity of the 15 connections in the plug
Are these satisfactory?

NO → 1. Remake the connections
2. Replace the cables

YES ↓

Switch on the ignition
Wait for approximately 10 seconds
Does the boost control valve 'click' continuously?
Note The valve may 'click' briefly for between 5 and 10 seconds when the ignition is switched on

NO → Disconnect the electrical plug from the boost control valve
Switch on the ignition and measure the voltage at the loom connector
Is it 10 to 13 volts?

NO → Check the cables to the boost control solenoid valve

YES ↓

YES → Carry out checks to the air pressure transducer loom

↓

Check the voltage on the purple/brown cable
Is it 4.9 to 5.3 volts?

NO → Check the boost control valve

YES ↓

Check for cable continuity between the black cable and earth
Is it continuous?

YES → Check the air pressure transducer

NO ↓

Rectify faulty cable

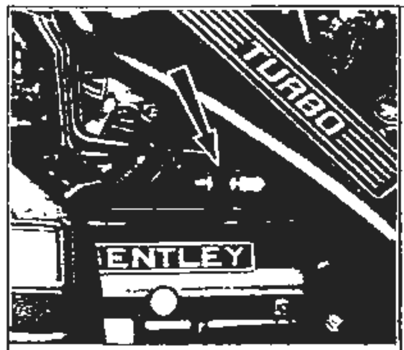

Boost control solenoid valve

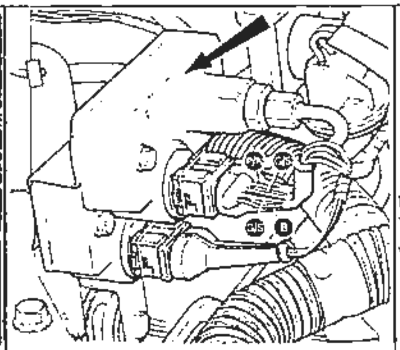

Air pressure transducer (APT)

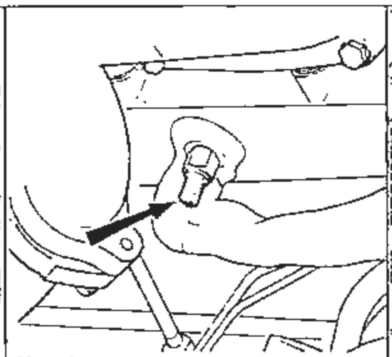

Knock sensors

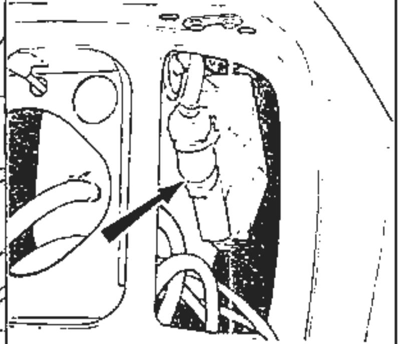

Boost control ECU

Figure D3-9

Turbocharging system – fault diagnosis chart
Sheet 2 of 5

Printed in England

Boost control system air pressure transducer (APT)

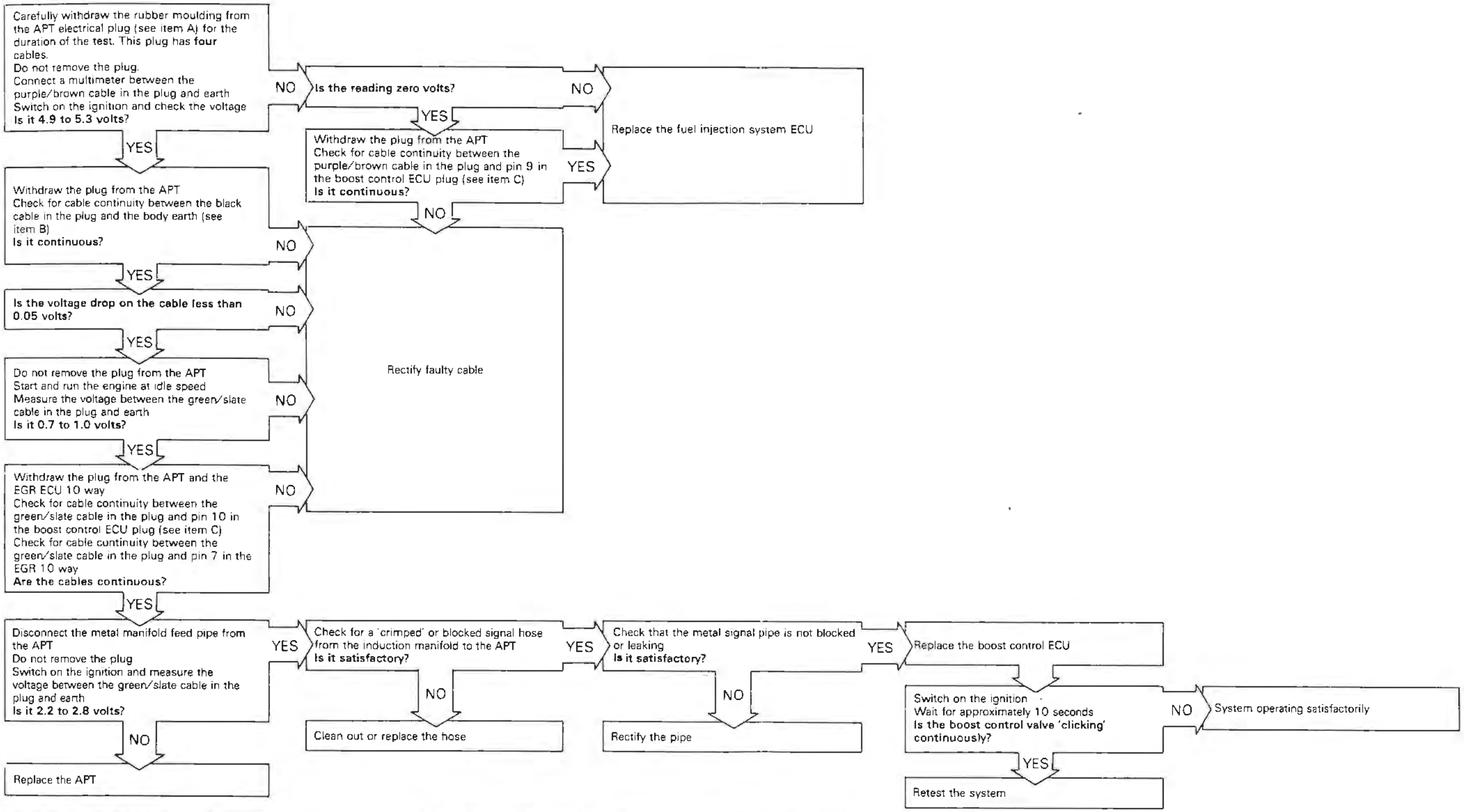
Carefully withdraw the rubber moulding from the APT electrical plug (see item A) for the duration of the test. This plug has **four** cables.
Do not remove the plug.
Connect a multimeter between the purple/brown cable in the plug and earth
Switch on the ignition and check the voltage
Is it 4.9 to 5.3 volts?

NO → **Is the reading zero volts?**

NO → Replace the fuel injection system ECU

YES → Withdraw the plug from the APT
Check for cable continuity between the purple/brown cable in the plug and pin 9 in the boost control ECU plug (see item C)
Is it continuous?

YES → Replace the fuel injection system ECU

NO → Rectify faulty cable

YES → Withdraw the plug from the APT
Check for cable continuity between the black cable in the plug and the body earth (see item B)
Is it continuous?

NO → Rectify faulty cable

YES → **Is the voltage drop on the cable less than 0.05 volts?**

NO → Rectify faulty cable

YES → Do not remove the plug from the APT
Start and run the engine at idle speed
Measure the voltage between the green/slate cable in the plug and earth
Is it 0.7 to 1.0 volts?

NO → Rectify faulty cable

YES → Withdraw the plug from the APT and the EGR ECU 10 way
Check for cable continuity between the green/slate cable in the plug and pin 10 in the boost control ECU plug (see item C)
Check for cable continuity between the green/slate cable in the plug and pin 7 in the EGR 10 way
Are the cables continuous?

NO → Rectify faulty cable

YES → Disconnect the metal manifold feed pipe from the APT
Do not remove the plug
Switch on the ignition and measure the voltage between the green/slate cable in the plug and earth
Is it 2.2 to 2.8 volts?

NO → Replace the APT

YES → Check for a 'crimped' or blocked signal hose from the induction manifold to the APT
Is it satisfactory?

NO → Clean out or replace the hose

YES → Check that the metal signal pipe is not blocked or leaking
Is it satisfactory?

NO → Rectify the pipe

YES → Replace the boost control ECU

Switch on the ignition
Wait for approximately 10 seconds
Is the boost control valve 'clicking' continuously?

NO → System operating satisfactorily

YES → Retest the system

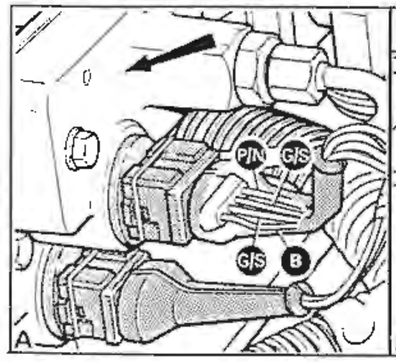

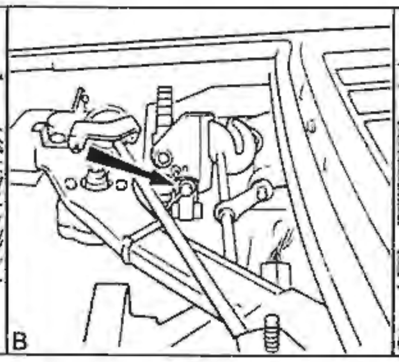

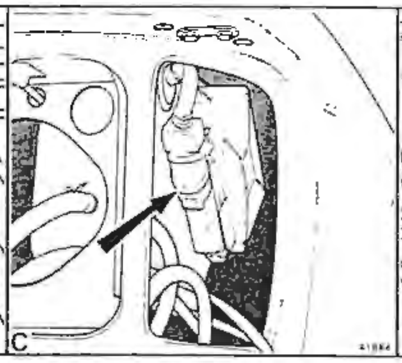

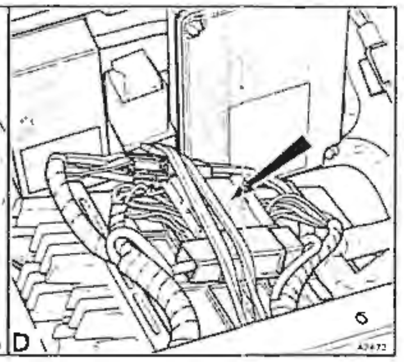

Figure D3-9

Turbocharging system – fault diagnosis chart
Sheet 3 of 5

Boost control solenoid valve

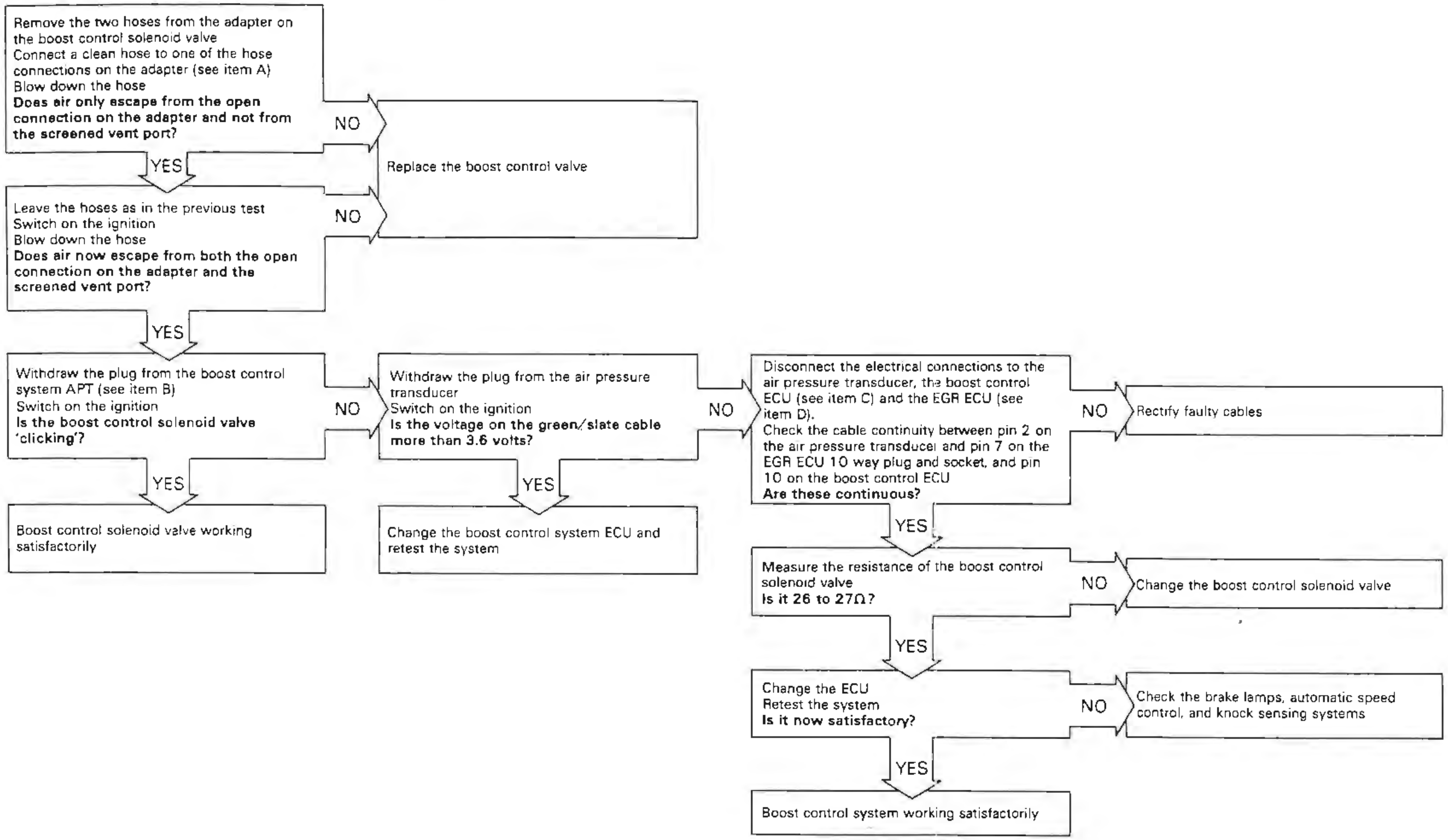

Remove the two hoses from the adapter on the boost control solenoid valve
Connect a clean hose to one of the hose connections on the adapter (see item A)
Blow down the hose
Does air only escape from the open connection on the adapter and not from the screened vent port?

Replace the boost control valve

Leave the hoses as in the previous test
Switch on the ignition
Blow down the hose
Does air now escape from both the open connection on the adapter and the screened vent port?

Withdraw the plug from the boost control system APT (see item B)
Switch on the ignition
Is the boost control solenoid valve 'clicking'?

Boost control solenoid valve working satisfactorily

Withdraw the plug from the air pressure transducer
Switch on the ignition
Is the voltage on the green/slate cable more than 3.6 volts?

Change the boost control system ECU and retest the system

Disconnect the electrical connections to the air pressure transducer, the boost control ECU (see item C) and the EGR ECU (see item D).
Check the cable continuity between pin 2 on the air pressure transducer and pin 7 on the EGR ECU 10 way plug and socket, and pin 10 on the boost control ECU
Are these continuous?

Rectify faulty cables

Measure the resistance of the boost control solenoid valve
Is it 26 to 27Ω?

Change the boost control solenoid valve

Change the ECU
Retest the system
Is it now satisfactory?

Check the brake lamps, automatic speed control, and knock sensing systems

Boost control system working satisfactorily

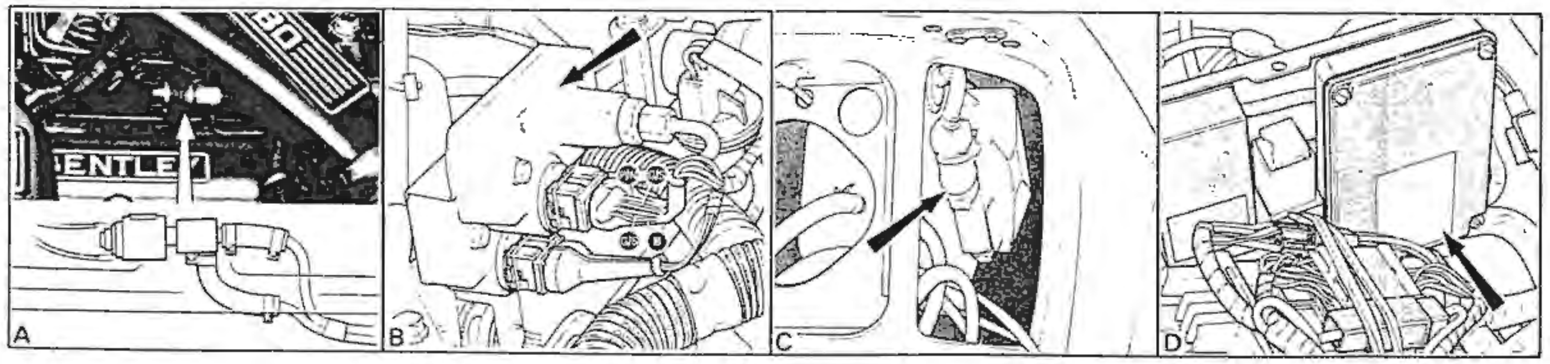

Figure D3-9

Turbocharging system – fault diagnosis chart
Sheet 4 of 5

Printed in England

Wastegate

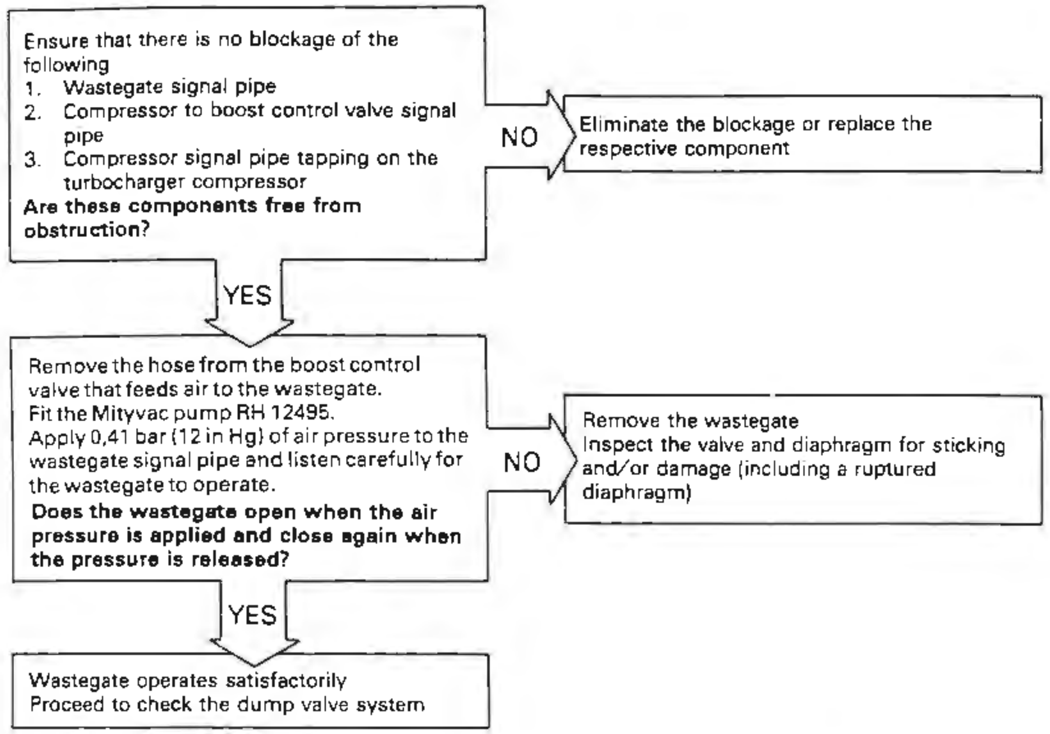

Ensure that there is no blockage of the following
1. Wastegate signal pipe
2. Compressor to boost control valve signal pipe
3. Compressor signal pipe tapping on the turbocharger compressor

Are these components free from obstruction?

Eliminate the blockage or replace the respective component

Remove the hose from the boost control valve that feeds air to the wastegate.
Fit the Mityvac pump RH 12495.
Apply 0,41 bar (12 in Hg) of air pressure to the wastegate signal pipe and listen carefully for the wastegate to operate.
Does the wastegate open when the air pressure is applied and close again when the pressure is released?

Remove the wastegate
Inspect the valve and diaphragm for sticking and/or damage (including a ruptured diaphragm)

Wastegate operates satisfactorily
Proceed to check the dump valve system

Dump valve

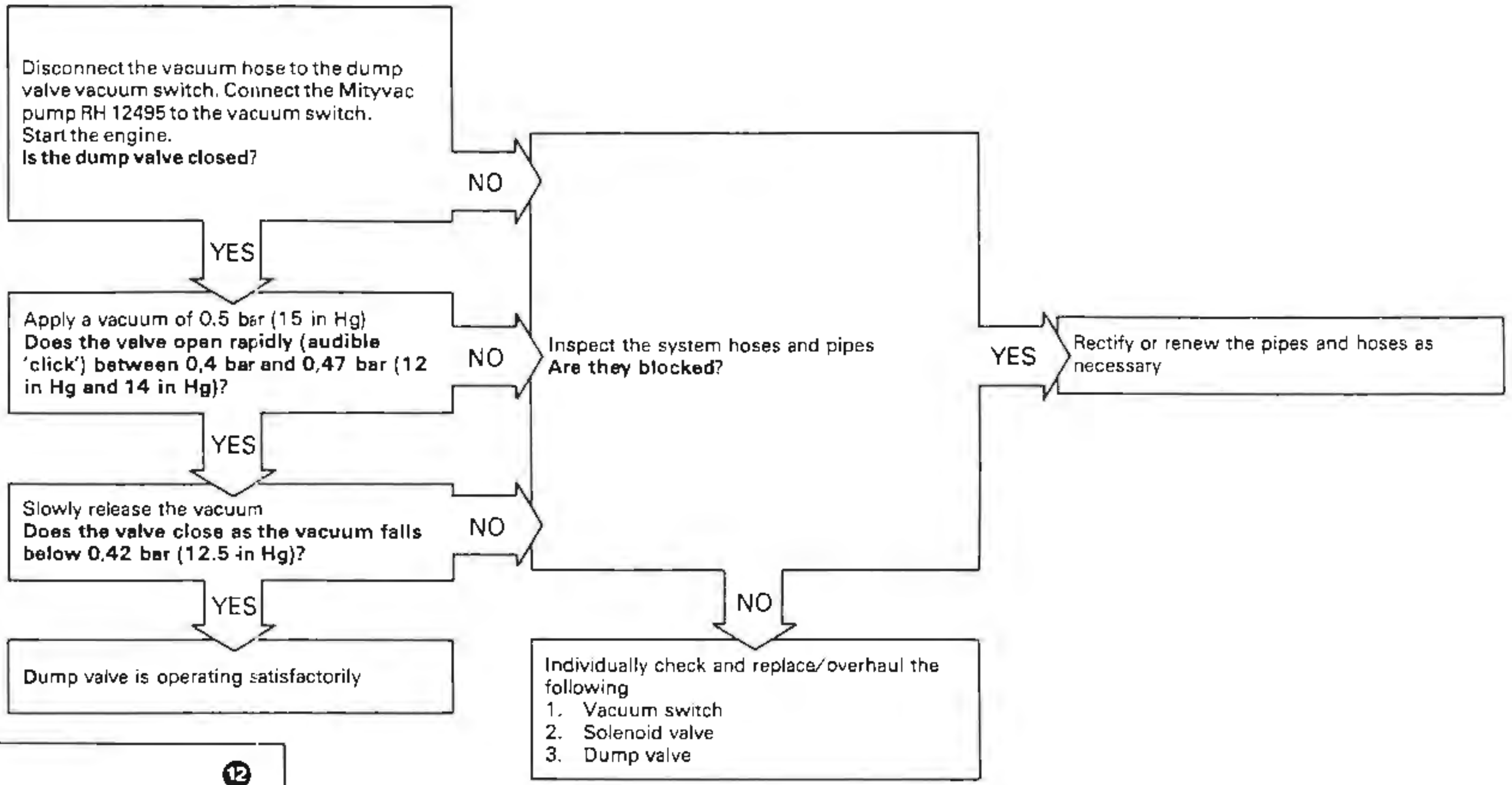

Disconnect the vacuum hose to the dump valve vacuum switch. Connect the Mityvac pump RH 12495 to the vacuum switch.
Start the engine.
Is the dump valve closed?

Apply a vacuum of 0.5 bar (15 in Hg)
Does the valve open rapidly (audible 'click') between 0,4 bar and 0,47 bar (12 in Hg and 14 in Hg)?

Slowly release the vacuum
Does the valve close as the vacuum falls below 0.42 bar (12.5 in Hg)?

Dump valve is operating satisfactorily

Inspect the system hoses and pipes
Are they blocked?

Rectify or renew the pipes and hoses as necessary

Individually check and replace/overhaul the following
1. Vacuum switch
2. Solenoid valve
3. Dump valve

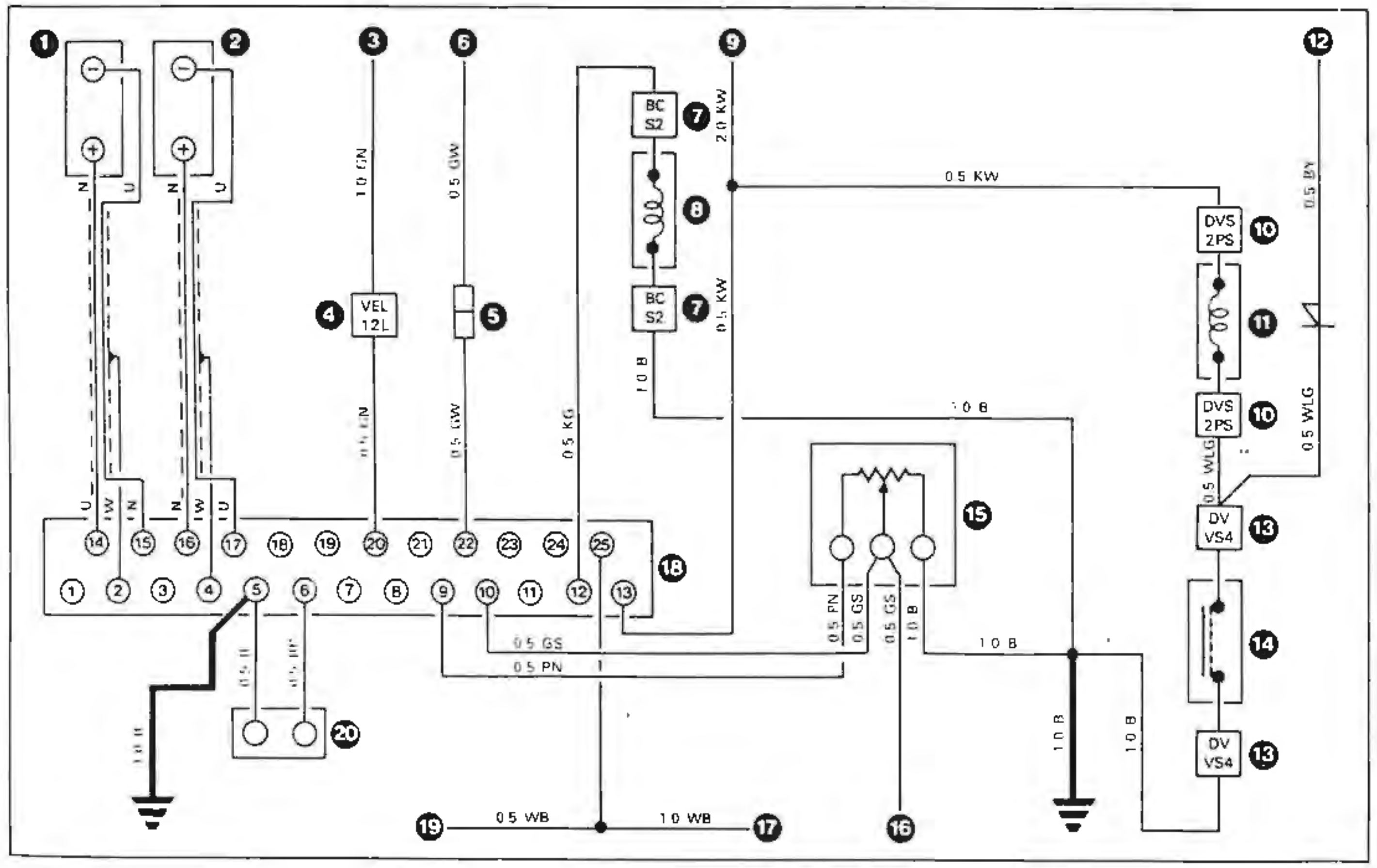

1 'A' bank knock sensor
2 'B' bank knock sensor
3 Braking system
4 Left-hand valance 12 way plug and socket
5 Left-hand valance single connection
6 Speed control system
7 Boost control solenoid 2 way plug and socket
8 Boost control solenoid
9 Right-hand valance 7 way plug and socket
10 Dump valve solenoid 2 way plug and socket
11 Dump valve solenoid
12 Left-hand valance 12 way plug and socket
13 Dump valve vacuum switch 4 way plug and socket
14 Dump valve vacuum switch
15 Air pressure transducer
16 EGR ECU
17 EGR ECU
18 Boost control ECU
19 K-Motronic ECU
20 Parameter code socket (link required on cars fitted with catalytic converters)

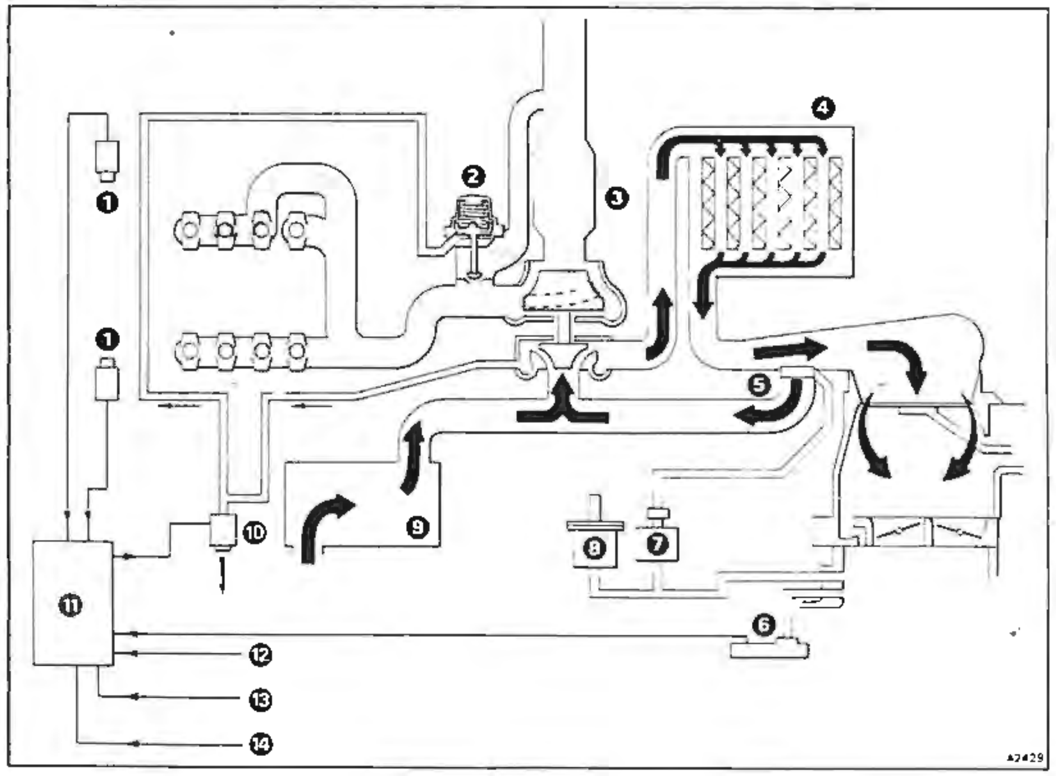

1 Knock sensor
2 Wastegate
3 Warm-up catalytic converter
4 Intercooler
5 Dump valve
6 Air pressure transducer
7 Dump valve solenoid
8 Dump valve vacuum switch
9 Air intake filter housing
10 Boost control solenoid
11 Boost control ECU
12 K-Motronic
13 Braking system
14 Speed control system

Figure D3-9

Turbocharging system – fault diagnosis chart
Sheet 5 of 5

Brake lamps, Cruise control, and Knock sensors

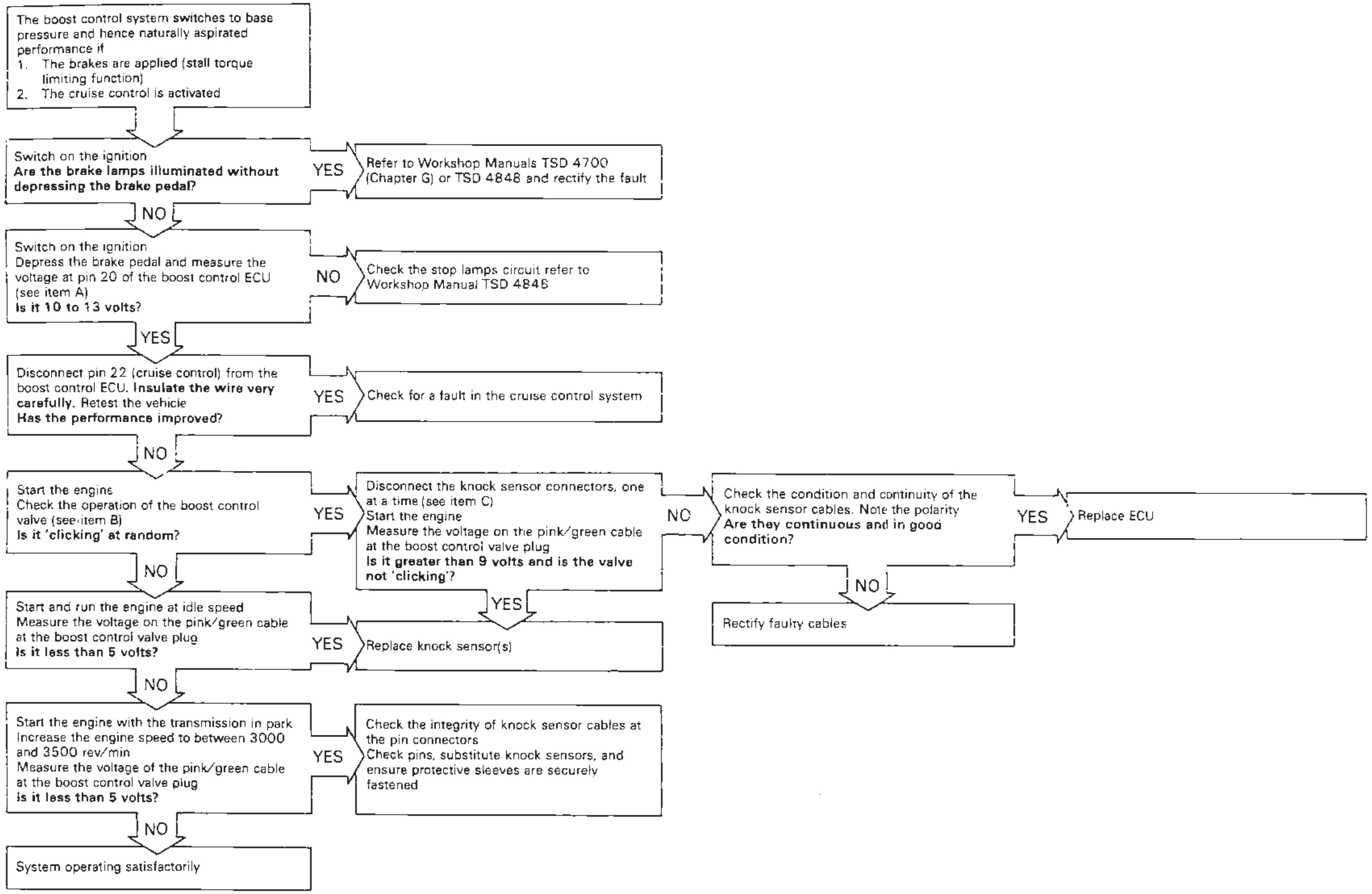

The boost control system switches to base pressure and hence naturally aspirated performance if

1. The brakes are applied (stall torque limiting function)
2. The cruise control is activated

Switch on the ignition
Are the brake lamps illuminated without depressing the brake pedal?

YES

Refer to Workshop Manuals TSD 4700 (Chapter G) or TSD 4848 and rectify the fault

NO

Switch on the ignition
Depress the brake pedal and measure the voltage at pin 20 of the boost control ECU (see item A)
Is it 10 to 13 volts?

NO

Check the stop lamps circuit refer to Workshop Manual TSD 4848

YES

Disconnect pin 22 (cruise control) from the boost control ECU. **Insulate the wire very carefully.** Retest the vehicle
Has the performance improved?

YES

Check for a fault in the cruise control system

NO

Start the engine
Check the operation of the boost control valve (see item B)
Is it 'clicking' at random?

YES

Disconnect the knock sensor connectors, one at a time (see item C)
Start the engine
Measure the voltage on the pink/green cable at the boost control valve plug
Is it greater than 9 volts and is the valve not 'clicking'?

NO

Check the condition and continuity of the knock sensor cables. Note the polarity
Are they continuous and in good condition?

YES

Replace ECU

NO

Rectify faulty cables

YES

Replace knock sensor(s)

NO

Start and run the engine at idle speed
Measure the voltage on the pink/green cable at the boost control valve plug
Is it less than 5 volts?

YES

Replace knock sensor(s)

NO

Start the engine with the transmission in park
Increase the engine speed to between 3000 and 3500 rev/min
Measure the voltage of the pink/green cable at the boost control valve plug
Is it less than 5 volts?

YES

Check the integrity of knock sensor cables at the pin connectors
Check pins, substitute knock sensors, and ensure protective sleeves are securely fastened

NO

System operating satisfactorily

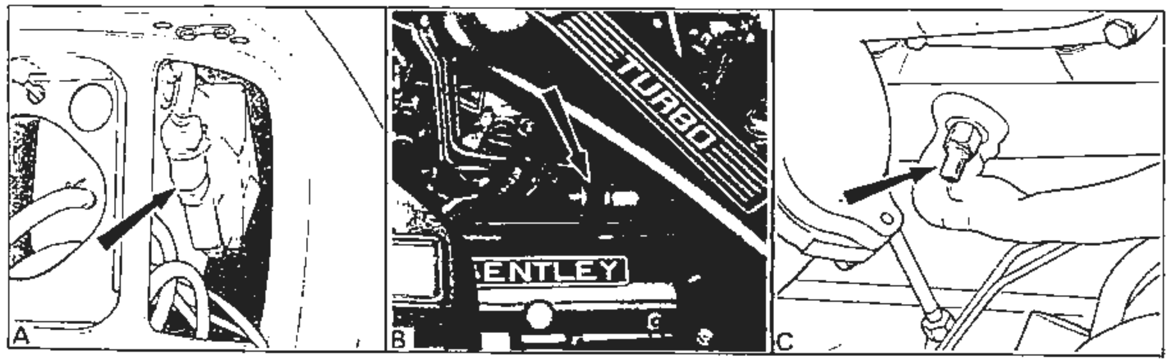

the CO measuring pipe from the main exhaust pipe below the turbocharger.

14. Unscrew the two setscrews securing the oil drain pipe to the bottom of the turbocharger. Free the joint.

15. Unscrew the exhaust clamp ring, securing the turbocharger assembly to the exhaust downtake pipe.

16. Unscrew the four nuts retaining the turbocharger assembly to the exhaust manifold mounting flange. Collect the distance washers.

17. Carefully withdraw the turbocharger assembly, taking care not to damage the machined mating faces of both the turbocharger and the exhaust manifold.

18. Fit the turbocharger by reversing the removal procedure, noting the following.

19. Ensure that the face joint surfaces between the turbocharger and exhaust manifold are clean and undamaged.

20. Torque tighten the retaining nuts to the figures given in Chapter L.

21. Before connecting the lubrication pipes, the turbocharger must be primed with clean engine oil in the following manner.

a. Slowly pour the engine oil into the feed port on top of the turbocharger and manually spin the compressor blades. Exercise care to ensure that the blades are not damaged.

b. Once the oil drains from the port on the bottom of the turbocharger, clean the joint face and fit both the gasket and oil return pipe.

c. Fill the turbocharger through the feed port and then clean the joint face and fit both the gasket and oil feed pipe.

Exhaust wastegate – To remove and fit
(see fig. D3-11)

1. Locate the boost pressure pipe connection on the side of the wastegate assembly. Unscrew the male pipe nut and withdraw the pressure pipe.

2. Unscrew the setscrews securing the wastegate to the exhaust manifold. Collect the washers.

3. Withdraw the wastegate and collect the 'O' ring.

4. Fit the wastegate by reversing the removal procedure, noting that the sealing ring fitted between the wastegate and housing must be in good condition.

For the remainder of the information relating to the exhaust system refer to Workshop Manual TSD 4700, Chapter Q.

Air dump valve (recirculation) pipe – To remove and fit

The recirculation pipe is an integral part of the cast intake assembly.

1. Unscrew the worm drive clip securing.

a. the main intake hose to the cast intake assembly.

b. the hose from the air dump valve to the metal pipe.

Twist each hose to free the joint.

2. Unscrew the intake assembly retaining nut and collect the washer (see fig. D3-12).

3. Withdraw the pipe assembly.

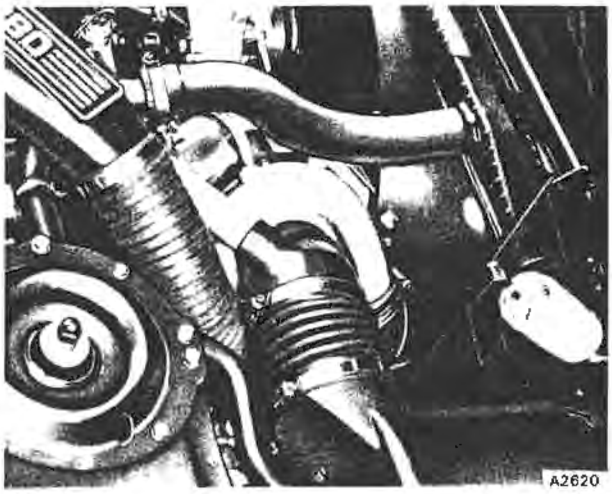

Fig. D3-10 Turbocharger and inlet pipes

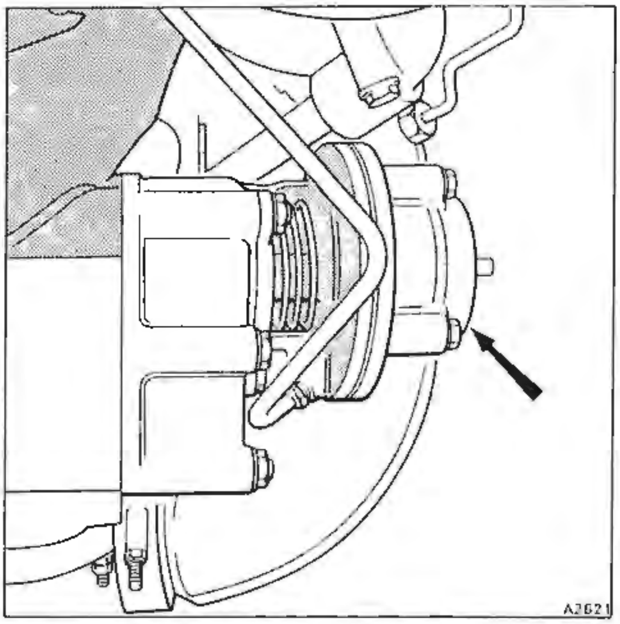

Fig. D3-11 Exhaust gas wastegate

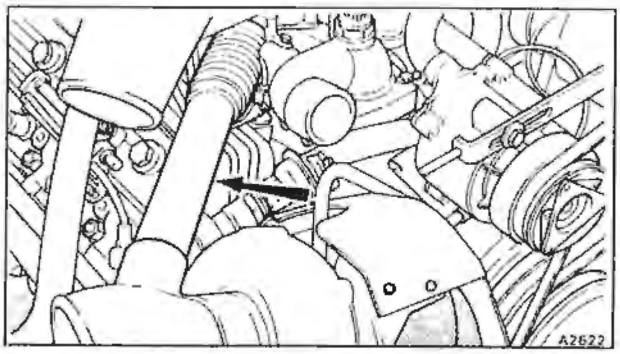

Fig. D3-12 Air dump valve pipe

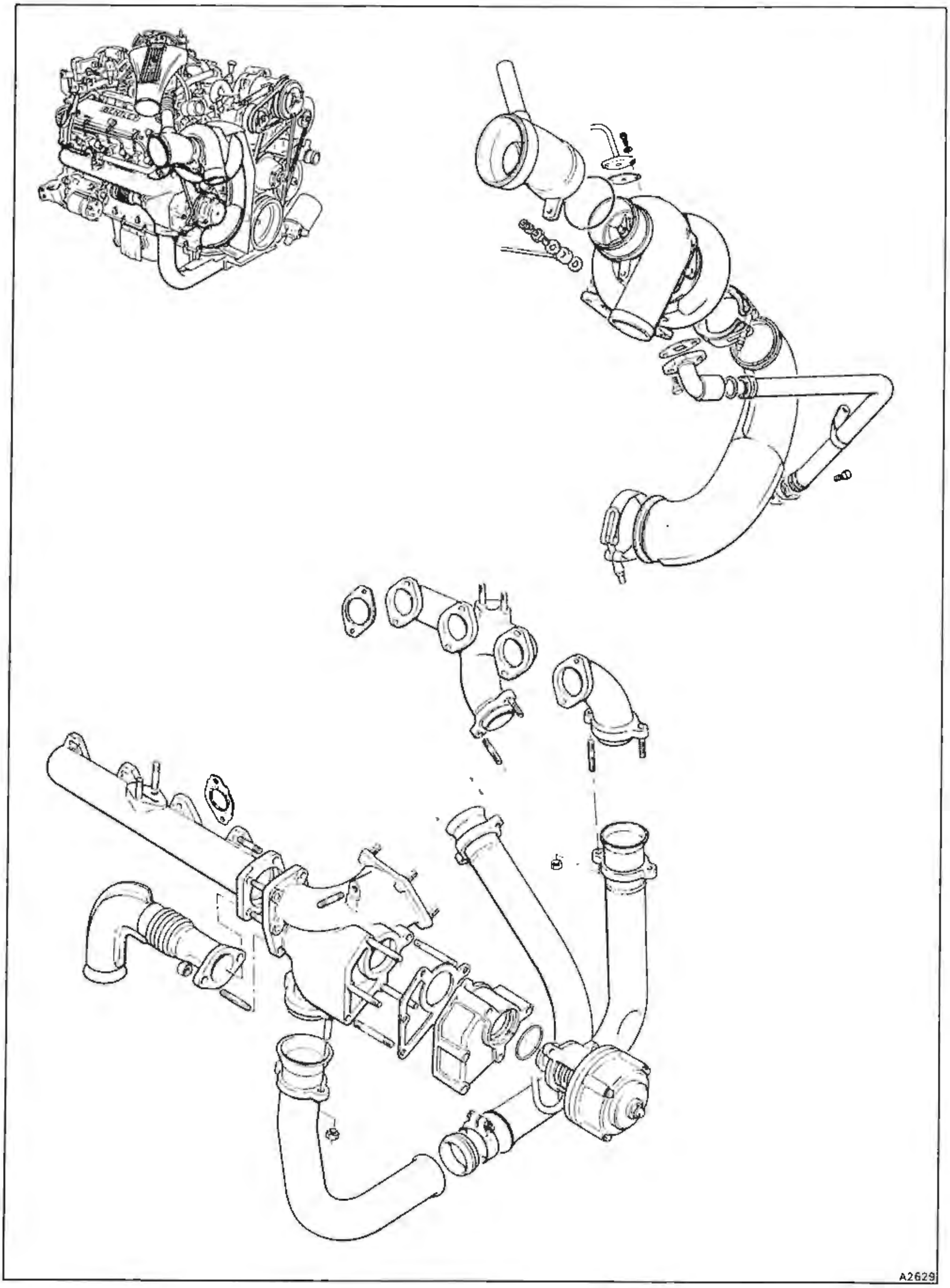

Fig. D3-13 Turbocharger and exhaust fittings

4. Fit the pipe assembly by reversing the procedure, ensuring that the hoses are in good condition.

Air dump valve – To remove and fit

1. Free the two flexible hoses from their respective connections on the bottom of the dump valve (see fig. D3-14).
2. Remove the cast engine air intake elbow (refer to Chapter B, Section B4, Mixture control unit assembly – To remove and fit).
3. Invert the cast elbow.
4. Unscrew the three setscrews retaining the dump valve. Collect the washer fitted under the head of each setscrew.
5. Withdraw the dump valve assembly.
6. Fit the dump valve by reversing the procedure, ensuring that the gasket is in good condition.

Air dump valve – To dismantle, inspect, and assemble (see fig. D3-5)

1. Remove the dump valve from the cast air intake elbow.
2. Collect the rubber sealing ring.
3. Unscrew the two Allen screws retaining the circular end plate to the assembly. Collect the gasket.
4. Unscrew the two through setscrews from the base of the dump valve. Collect the washer from each setscrew.
5. Withdraw the valve from the casting.
6. Unscrew the four setscrews situated around the diaphragm retaining ring.
7. Unscrew the nut from the centre through bolt. Collect the washer.
8. Lift off the seal assembly, diaphragm, spring guide, spring, and base washer.
9. Withdraw the through bolt, guide, and washer from the valve housing.
10. Clean the parts and examine the rubber diaphragm, body sealing ring, and the valve seal assembly plate.
11. Assemble the components by reversing the dismantling procedure.

Air dump valve vacuum switch and solenoid – To remove and test (see fig. D3-5)

This solenoid and switch are fitted adjacent to the air flow sensor potentiometer on the mixture control unit.

Vacuum switch – To remove and fit

1. Disconnect the vacuum signal hose from the switch.
2. Disconnect the electrical connections to the switch, at the 4-way connection.
3. Carefully prise the shakeproof securing washer from the cylindrical body of the switch, below the mounting bracket.
4. Lift the switch from the mounting bracket.
5. Fit the switch by reversing the dismantling procedure.

Vacuum switch – To test

1. Locate the switch electrical connection block and connect a digital multi-meter between the brown cable and earth.

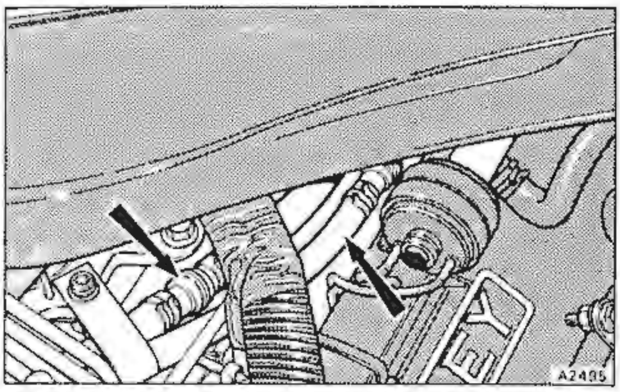

Fig. D3-14 Dump valve signal hoses

2. Slacken the vacuum switch signal hose clamp screw and withdraw the hose. Connect the Mityvac pump RH 12495 to the connection on the switch.
3. Switch on the ignition noting that the reading on the multi-meter is between 8 volts and 15 volts.
4. Operate the vacuum pump and apply a vacuum to the switch. The meter should read zero when the reading on the gauge is between 317,50 mm Hg and 381,0 mm Hg (12.50 in Hg and 15 in Hg).
5. Slowly release the vacuum, noting that the meter again reads between 8 volts and 15 volts before the vacuum drops below 317,50 mm Hg (12.50 in Hg).
6. If the operation of the switch is suspect, it should be renewed.

Solenoid valve – To remove and fit

1. Disconnect the inlet and outlet hoses from the solenoid valve.
2. Disconnect the electrical connections to the solenoid valve at the 2-way connection block.
3. Carefully slide the solenoid from its rubber mounting.
4. Fit the solenoid valve by reversing the dismantling procedure.

Solenoid valve – To test

1. Disconnect the electrical connections to the solenoid valve at the 2-way connection block. This block is situated between the air potentiomer (mixture control unit) and the solenoid valve.

Note The connection block is usually clipped together with the connection block for the vacuum switch.

2. Slacken the hose clamp screws on the solenoid inlet and outlet connections. Twist each hose to free the joint. Withdraw the two hoses.
3. Connect a suitable length of hose to the front connection on the solenoid and blow down the open end of the hose. It **should be** possible to blow through the solenoid valve.
4. Connect a 12 volt supply to the solenoid. Note that it **should not be** possible to blow down the hose

when the solenoid is energized.

Note If the solenoid valve is fitted to the car for this test, exercise care to eliminate the possibility of an electrical spark.

Boost control ECU – To remove and fit
(see fig. D3-6)

1. Disconnect the battery.
2. Remove the front left-hand flasher and side lamp assembly (refer to Workshop Manual TSD 4848).
3. Disconnect the multi-pin plug from the ECU.

Note Do not finger the ECU terminal pins.

4. Unscrew the setscrews securing the engine cooling system expansion bottle to the wing valance. Carefully manoeuvre the expansion bottle into the engine compartment to gain access to the ECU securing screws.
5. Unscrew the three self-tapping screws that retain the ECU to the wing valance.

   Support the ECU before the last securing screw is removed.
6. Withdraw the ECU through the front flasher and side lamp wing aperture.
7. Collect the three screw clips from the ECU.
8. Fit the ECU by reversing the removal procedure.

Air pressure transducer (APT) – To remove and fit

1. Disconnect the electrical plug at the APT.
2. Unscrew the metal pipe nut from the adapter on the APT.
3. Unscrew the two mounting screws and withdraw the APT.
4. Fit the assembly by reversing the removal procedure.

Engine knock sensors – To remove and fit

1. Locate the sensor mounted half-way along the crankcase on each side.
2. Detach the electrical plug from the end of the sensor.
3. Unscrew the sensor from the crankcase.
4. Fit the sensors by reversing the removal procedure. Ensure that the heat resistant sleeves fitted to protect each sensor cable, are in good condition and satisfactorily clipped along their entire length.

Ignition systems

Contents

Contents	Sections						
	Rolls-Royce			Bentley			
	Silver Spirit	Silver Spur	Corniche / Corniche II	Eight	Mulsanne / Mulsanne S	Turbo R	Continental
Contents and issue record sheet	E1	E1	E1	E1	E1	E1	E1
1987/88/89 model year Naturally aspirated cars							
1987/88 model year Turbocharged cars							
Precautions	E2	E2	E2	E2	E2	E2	E2
Ignition control system	E3	E3	E3	E3	E3	E5	E3
Ignition timing	E4	E4	E4	E4	E4	–	E4
Ignition system test procedures (incorporating ignition timing)	–	–	–	–	–	E6	–
Ignition circuits	E7	E7	E7	E7	E7	E7	E7

Note For details of the ignition system fitted to 1989 model year turbocharged cars, refer to Chapter B, Section B4 K - Motronic.

Printed in England

Issue record sheet

The dates quoted below refer to the issue date of individual pages within this chapter.

Sections	E1	E2	E3	E4	E5	E6	E7			
Page No.										
1	5/88	2/87	2/87	2/90	7/87	10/88	10/87			
2			2/87	2/90	7/87	1/89				
3	2/90			2/90	7/87	7/87	2/87			
4				2/87		7/87	——			
5						7/87	2/87			
6						7/87	2/87			
7						2/90	2/87			
8										
9										
10										
11										
12										
13										
14										
15										
16										
17										
18										
19										
20										
21										
22										
23										
24										
25										
26										
27										
28										
29										
30										
31										
32										
33										
34										
35										
36										
37										
38										
39										
40										
41										
42										
43										
44										
45										
46										
47										
48										
49										
50										
51										
52										
53										
54										

2/90
Printed in England

Precautions

Danger – Exhaust gases
To ensure adequate ventilation, always open garage doors fully before starting the car in a garage, or any confined space.

The exhaust gases contain carbon monoxide (CO), which is odourless and invisible, but very poisonous.

Operating the air conditioning system in a confined space increases the danger of these gases entering the car.

Danger – High voltage levels
Dangerously high voltage levels are present in an electronic ignition system. These levels are not only present in individual components, but also in the wiring looms, plugs, sockets, and test connections.

The primary as well as the secondary circuit are subject to these high voltages.

Therefore, whenever the system is switched on ensure that you do not touch components/circuits contained within the ignition system.

General precautions
Whenever possible ensure that the battery master switch (if fitted) is turned to the OFF position or the battery is disconnected. However, it is essential that when disconnecting or connecting electrical components, either the battery master switch is turned to the OFF position or the battery is disconnected.

When carrying out operations that require the battery master switch to be in the ON position and the battery connected **always ensure** that the following procedures are carried out.

The parking brake is firmly applied.

The gear range selector lever is in the park position.

The gearchange isolating fuse (fuse A6) on the main fuseboard F2 is removed.

In addition, the following points should be noted.

Never disconnect the battery or switch off the battery master switch when the engine is running.

Always ensure correct polarity when making cable connections.

It is recommended that when carrying out tests on the car wiring, a good quality multi-meter is used. **Never** use generator type meters.

Do not use a test lamp on circuitry that contains electronic components, such as the ignition system.

Special precautions
1. Always wear thick rubber gloves and use insulated tools.
2. Before using test equipment always read the manufacturer's instructions.
3. Do not pierce any electrical leads or looms with test probes, etc.
4. Never remove the high tension lead situated between the ignition coil and distributor when the engine is running.
5. Ensure that no arcing takes place between electrical connections.
6. Never supply more than 16 volts direct current to the ignition system.

Ignition control system

Introduction

A constant energy ignition control system is fitted.

The system utilises a variable reluctance electronic distributor incorporating an integral amplifier module together with a high energy coil. The system also incorporates resistive type sparking plugs.

Component description

Ignition distributor (see fig. E3-1)

The ignition distributor assembly is situated at the rear of the engine and is driven from the crankshaft via a skew gear.

Contained within the distributor body is an assembly incorporating a permanent magnet and coil; the assembly being linked to an amplifier module. Also contained within the body is a rotor arm and reluctor wheel; the wheel incorporating eight teeth, one per cylinder. Each time a tooth of the reluctor wheel passes close to the coil pole piece (during rotation of the distributor shaft) a small voltage is induced within the coil. The voltage is then passed to the ignition amplifier module. This in turn controls the primary current in the ignition coil.

The advance characteristics of the ignition distributor are controlled by centrifugal weights together with the vacuum advance capsule.

Except during idle speed or at small throttle openings, a gated orifice vacuum signal is applied to the ignition distributor capsule from the throttle body. This ensures smooth running of the engine under all operating conditions and therefore improves fuel economy.

Ignition coil

The ignition coil is situated in the engine compartment, mounted on the right-hand inner wing valance (see fig. E3-2).

When the ignition amplifier, located on the distributor body, interrupts the current to the primary winding of the ignition coil a high voltage is induced in the secondary winding. The high voltage is distributed via the distributor rotor arm and high tension leads to the sparking plugs.

Sparking plugs

Prior to fitting the sparking plugs ensure that the gap setting corresponds to the figures quoted in Chapter A.

Engine crankshaft sensor

To enable ignition timing to be measured using diagnostic test equipment an engine crankshaft sensor is located at the rear of the engine, mounted on the transmission adapter (see fig. E3-3).

When the crankshaft is at 20° atdc the sensor detects a pin on the starter ring carrier. This causes a

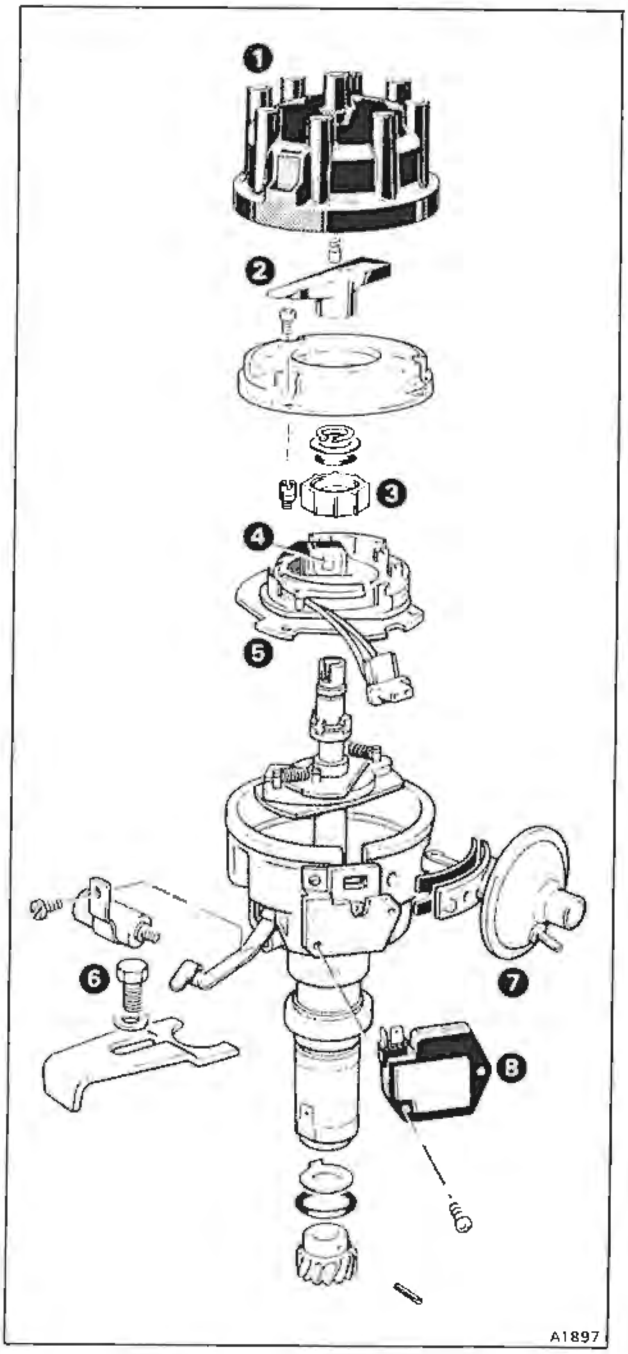

Fig. E3-1 Ignition distributor
1 Cover
2 Rotor arm
3 Reluctor wheel
4 Coil pole piece
5 Pick-up assembly
6 Clamp setscrew
7 Vacuum advance capsule
8 Amplifier module

Printed in England

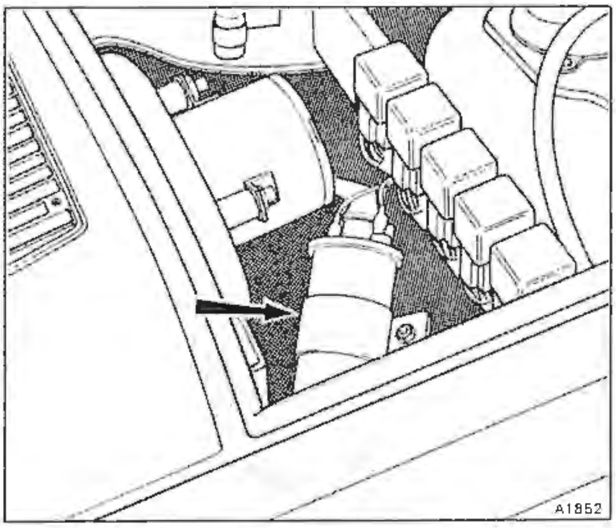

Fig. E3-2 Ignition coil

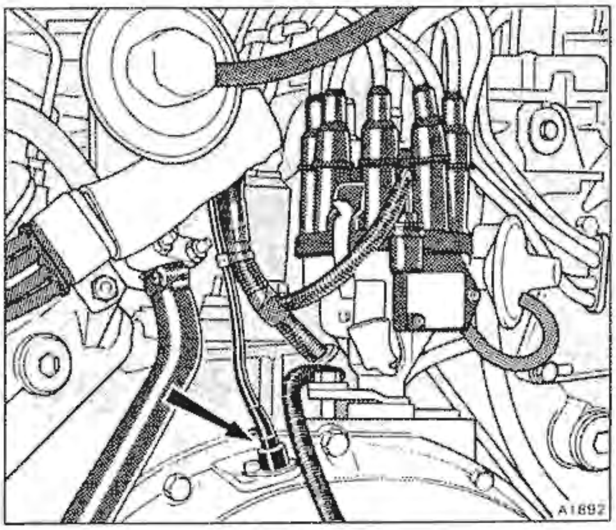

Fig. E3-3 Engine crankshaft sensor

pulse to be generated in the coil of the sensor. This pulse is transmitted, via the diagnostic socket, to the test equipment giving accurate information as to crankshaft position.

Diagnostic socket
The diagnostic socket is situated on the engine adjacent to the alternator as shown in figure E4-4.

Ignition timing

Ignition timing
Ignition timing settings vary, dependent upon the country specification of the car. Therefore, prior to commencing work, reference must be made to one of the following ignition timing data charts.

Figure E4-1 *Cars conforming to an Australian, Japanese, or North American specification.*

Figure E4-2 *Cars conforming to a Middle East specification.*

Figure E4-3 *Cars other than those conforming to an Australian, Japanese, Middle East, or North American specification.*

Ignition – To time
Ignition timing is carried out on A1 cylinder, the front cylinder on the right-hand side of the engine when viewed from the driver's seat.

Note It is important that the test equipment used to time the ignition meets the following specification.
Accuracy – Ignition timing within ± 1°
Rotational speed within ± 10 rev/min.

1. Ensure that the parking brake is firmly applied, the gear range selector lever is in the park position, and the gearchange isolating fuse (fuse A6) removed from fuseboard F2 at the main fuseboard.

Also ensure that the air conditioning function switch is in the OFF position and any non essential electrical loads are off.

2. Check that the sparking plugs are in good condition and that the gap settings are correct.
3. Move the battery master switch (if fitted) to the OFF position. Alternatively, disconnect the battery.
4. Connect suitable diagnostic test equipment (e.g. Bosch MOT 201) to the diagnostic socket (see fig. E4-4). Refer to the manufacturer's instructions when connecting this equipment.

If diagnostic test equipment is not available connect a stroboscope and tachometer in accordance with the manufacturer's instructions.

5. Disconnect the vacuum advance hose at the reducer connection (see fig. E4-5). Blank off the exposed hose leading to the throttle body.
6. As necessary move the battery master switch to the ON position or re-connect the battery.
7. Start and run the engine until the coolant thermostat has opened.

Continue to run the engine for a minimum of 15 minutes after the thermostat has opened.

8. As engine speed and ignition timing settings vary, dependent upon the specification of the car, reference must be made to the appropriate ignition timing data chart (see fig. E4-1, E4-2, or E4-3), prior to carrying out Operations 9, 10, 11, 14, and 18.
9. Operate the primary throttles by use of the accelerator pedal until the required engine speed is obtained (see **A** in fig. E4-1, E4-2, or E4-3).

When selecting this speed **ensure** that it is approached from a higher range.

Engine rev/min	**Ignition timing**	**Remarks**
Static	10° btdc	Initial static setting. A1 piston approaching tdc; distributor rotor arm on A1 firing position.
1400± 25 **A**	20° btdc±1°	Vacuum advance hose disconnected and exposed hose leading to throttle body blanked off. Approach engine rev/min from a higher speed.
580 (idle speed) **B**	6° btdc to 14° btdc	Air conditioning function switch in LOW position. Ensure that the compressor clutch is in the engaged position and record ignition timing figure.
580 (idle speed) **C**	10° to 14° **further** advanced than the figure recorded in **B**	Initial Vacuum of 635 mm Hg (25 in Hg) applied using Mityvac pump RH 12495, then reduce to 508 mm Hg (20 in Hg). Ensure that the compressor clutch is in the engaged position when taking ignition timing figure. Ignition timing figure should be between 16° btdc and 28° btdc.

Fig. E4-1 Ignition timing data *Cars conforming to an Australian, Japanese, or North American specification*

10. Check the ignition timing read out on the diagnostic test equipment. Alternatively, direct the timing light from the stroboscope onto the crankshaft damper timing marks and timing pointer (see fig. E4-6). Check the timing.

11. If the reading is outside the specified limits, slacken the ignition distributor clamp setscrew (see fig. E3-1) and rotate the distributor body in the appropriate direction until the correct setting is obtained.

Clockwise rotation of the distributor body advances the ignition and conversely anti-clockwise rotation retards the ignition.

After adjustment, tighten the distributor clamp

Engine rev/min	**Ignition timing**	**Remarks**
Static	1° btdc	Initial static setting. A1 piston approaching tdc; distributor rotor arm on A1 firing position.
2000 A	Middle East 25° btdc ± 1° Taiwan 30° btdc ± 1°	Vacuum advance hose disconnected and exposed hose leading to throttle body blanked off. Approach engine rev/min from a higher speed.
580 (idle speed) B	Middle East 3° atdc to 5° btdc Taiwan 2° btdc to 10° btdc	Air conditioning function switch in LOW position. Ensure that the compressor clutch is in the engaged position and record ignition timing figure.
580 (idle speed) C	12° to 16° **further** advanced than the figure recorded in B	Initial Vacuum of 635 mm Hg (25 in Hg) applied using Mityvac pump RH 12495, then reduce to 508 mm Hg (20 in Hg). Ensure that the compressor clutch is in the engaged position when taking ignition timing figure. Ignition timing figure should be between 9° btdc and 21° btdc.

Fig. E4-2 Ignition timing data *Cars conforming to a Middle East or Taiwan specification*

Engine rev/min	**Ignition timing**	**Remarks**
Static	6° btdc	Initial static setting. A1 piston approaching tdc; distributor rotor arm on A1 firing position.
2000 A	30° btdc ± 1°	Vacuum advance hose disconnected and exposed hose leading to throttle body blanked off. Approach engine rev/min from a higher speed.
580 (idle speed) B	2° btdc to 10° btdc	Air conditioning function switch in LOW position. Ensure that the compressor clutch is in the engaged position and record ignition timing figure.
580 (idle speed) C	12° to 16° **further** advanced than the figure recorded in B	Initial Vacuum of 635 mm Hg (25 in Hg) applied using Mityvac pump RH 12495, then reduce to 508 mm Hg (20 in Hg). Ensure that the compressor clutch is in the engaged position when taking ignition timing figure. Ignition timing figure should be between 14° btdc and 26° btdc.

Fig. E4-3 Ignition timing data *Cars other than those conforming to an Australian, Japanese, Middle East, North American, or Taiwan specification*

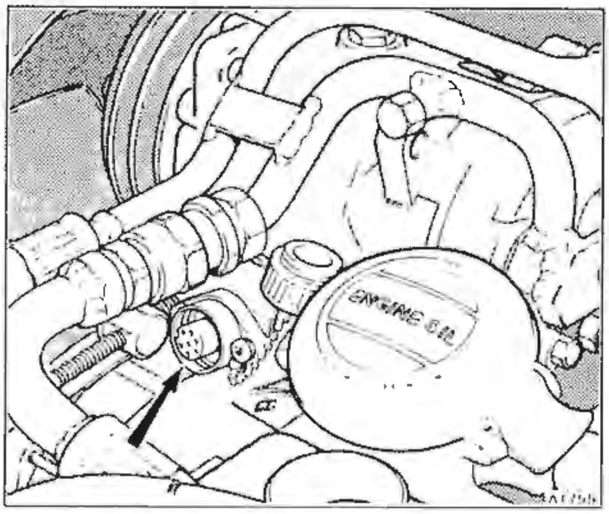

Fig. E4-4 **Diagnostic socket**

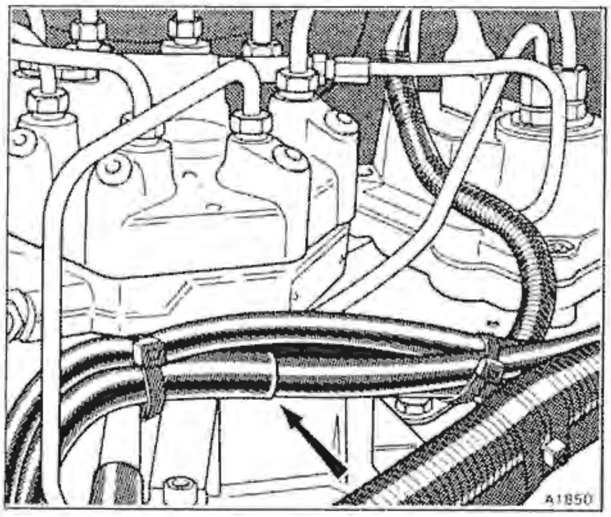

Fig. E4-5 **Vacuum advance hose reducer connection**

setscrew (finger tight plus half a turn) and check to ensure that the reading is still within the specified limits.

12. Select LOW position on the air conditioning function switch and ensure that the compressor clutch, situated in the engine compartment, has engaged.

With the switch in LOW position the compressor clutch will cycle in and out. Therefore, when carrying out Operations 13, 14, and 18 **ensure** that the compressor clutch is always in the engaged position.

13. Set the engine idle speed to 580 rev/min by means of the adjustment screw on the throttle body (see fig. E4-7). Clockwise rotation of the screw reduces the rev/min; anti-clockwise rotation increases the rev/min.

14. Check the ignition timing to ensure that it corresponds with the timing figures quoted in the relevant chart (see **B** in fig. E4-1, E4-2, or E4-3). Record the figure obtained.

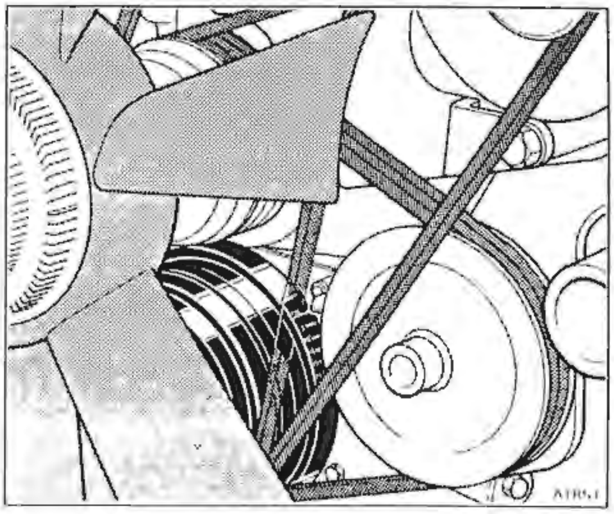

Fig. E4-6 **Crankshaft damper timing marks**

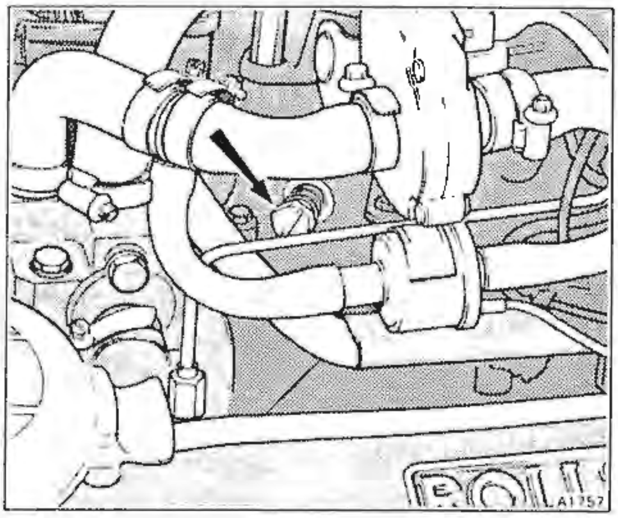

Fig. E4-7 **Idle speed adjustment screw**

If the figure is outside the specified range, this indicates that the distributor is faulty and a new unit must be fitted.

15. Stop the engine.

16. Locate the exposed hose from the vacuum advance capsule and connect a Mityvac pump RH 12495 to this hose.

17. Start the engine and apply an initial vacuum of 635 mm Hg (25 in Hg). Then, reduce the vacuum to 508 mm Hg (20 in Hg).

18. Adjust the engine idle speed to 580 rev/min. Note the ignition timing figure obtained in Operation 14 and check that the timing has **further** advanced by the amount specified in the relevant chart (see **C** in fig. E4-1, E4-2, or E4-3).

If the figure is outside the specified range, this indicates that the distributor is faulty and a new unit must be fitted.

19. Stop the engine. As necessary move the battery

master switch to the OFF position or disconnect the battery.

20. Remove the test equipment and re-connect the vacuum advance hose.

21. As necessary move the battery master switch to the ON position or re-connect the battery.

22. Check the engine idle speed and adjust if necessary, as described in Chapter B.

Ignition control system

Introduction
To provide optimum ignition timing a digital electronic ignition control system is fitted.

The system (see fig. E5-3) incorporates engine sensors, an EZ 58F electronic control unit, group 1 ignition amplifier and coil, group 2 ignition amplifier and coil, a two times four-way ignition distributor, and resistive type sparking plugs.

Ignition timing is pre-programmed and is not adjustable. Under no circumstance must any attempt be made to rotate the ignition distributor housing.

Component description

Engine sensors
The sensors located at various positions on the engine, monitor operating conditions. The information obtained from the sensors is transferred to the EZ 58F electronic control unit providing a constant indication of engine operating conditions. This enables the EZ 58F to provide optimum ignition timing.

Crankshaft sensor (see fig. E5-1) The sensor monitors engine speed and crankshaft position by obtaining a signal from the timing wheel mounted on the end of the crankshaft.

A regular waveform is induced by the sensor from the 124 tooth timing wheel. Each time an odd tooth spacing on the timing wheel passes the sensor tip an indication is produced in the waveform pattern. This provides a reference point for the EZ 58F electronic control unit.

The air gap between the tip of the sensor and the timing wheel should be between 0,5mm and 1,5mm (0.019in and 0.059in).

Engine coolant temperature sensor (see fig. E5-2) Located in the engine thermostat housing, the sensor provides the EZ 58F electronic control unit with information as to engine coolant temperature.

Ignition system Piezo resistive pressure transducer (see fig. E5-4) This sensor is located within the EZ 58F electronic control unit. It obtains information as to the load on the engine by measuring the absolute induction manifold pressure from a tapping on the induction manifold.

Throttle position switch (see fig. E5-5) The switch unit is mounted onto the throttle body and is connected to the spindle of the primary throttle plates. It identifies the position of the accelerator pedal and supplies the EZ 58F electronic control unit with information as to the operating mode of the engine (i.e. idle speed/ overrun, part load, or full load).

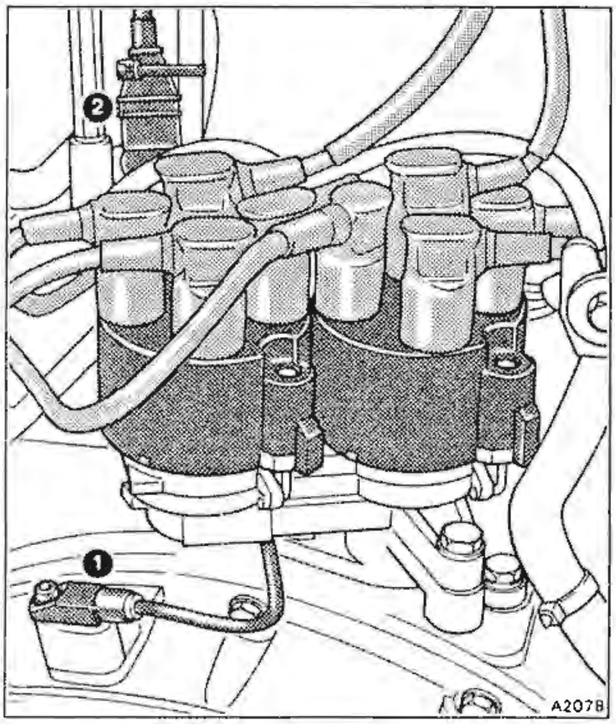

Fig. E5-1 **Crankshaft sensor, plug, and socket**
1 Sensor
2 Plug and socket

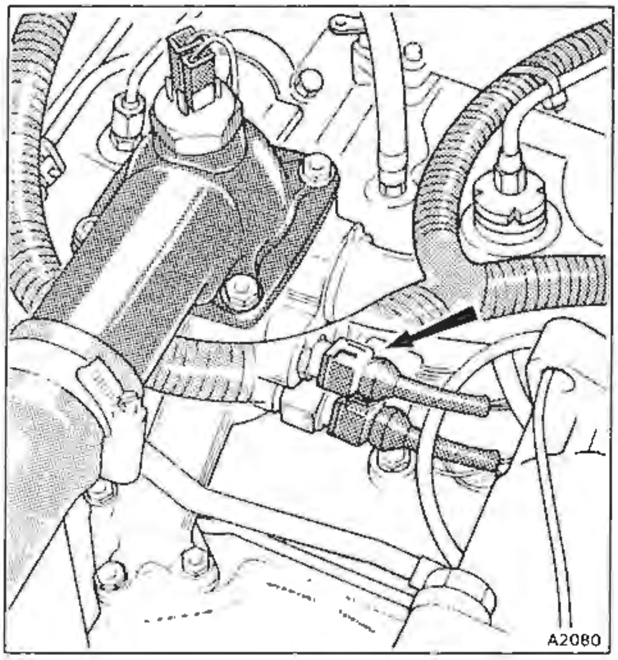

Fig. E5-2 **Engine coolant temperature sensor**

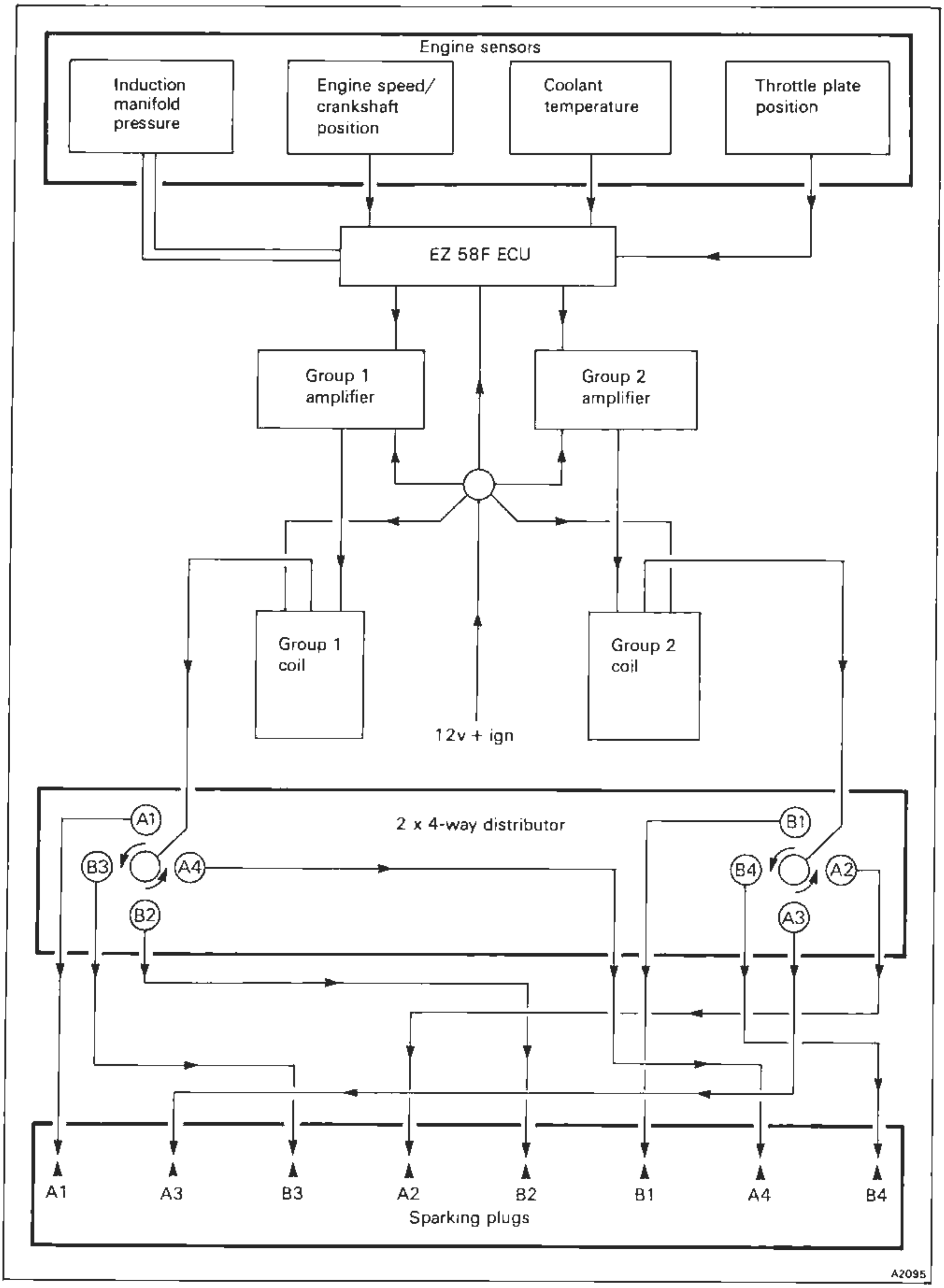

Fig. E5-3 Digital electronic ignition control system

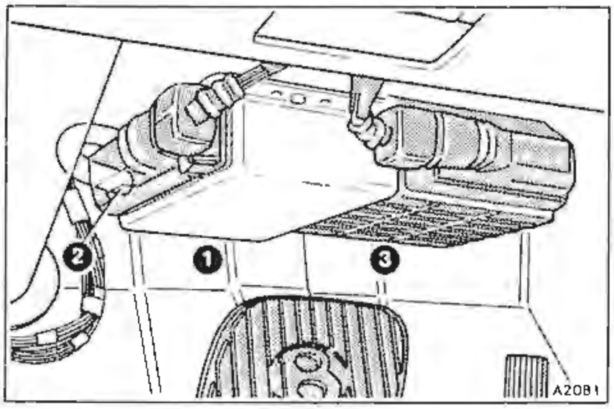

Fig. E5-4 Ignition system EZ 58F digital electronic control unit
1 Electronic control unit
2 Piezo resistive pressure transducer
3 KE2-Jetronic fuel injection system electronic control unit

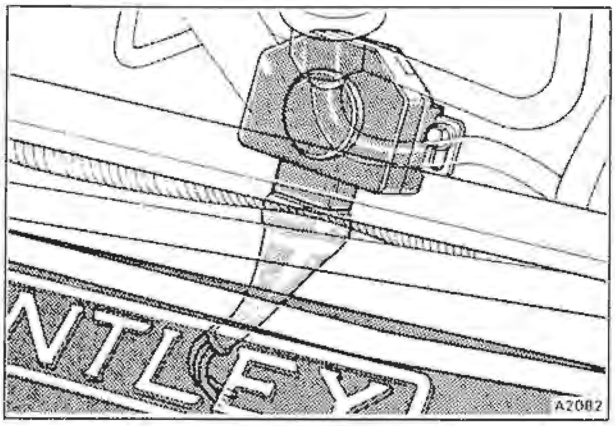

Fig. E5-5 Throttle position switch

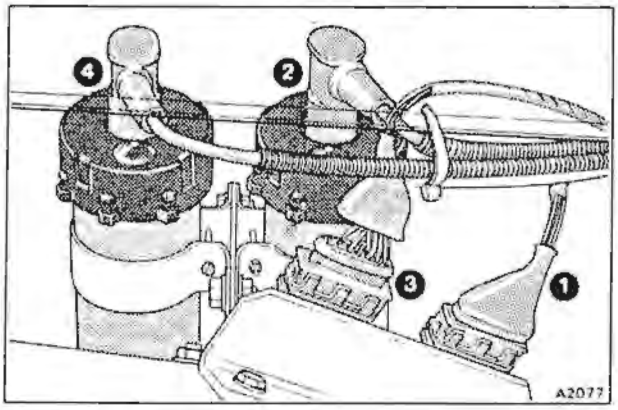

Fig. E5-6 Ignition amplifiers and coils
1 Group 1 amplifier
2 Group 1 coil
3 Group 2 amplifier
4 Group 2 coil

EZ 58F digital electronic control unit (see fig. E5-4)
The electronic control unit incorporates four pre-programmed ignition advance maps. These maps are designated – cranking and low engine rev/min, idle speed/overrun, part load, and full load.

Ignition amplifier modules (see fig. E5-6)
The amplifier modules (group 1 and group 2) are located adjacent to the bulkhead on the right-hand side of the engine compartment to the rear of the windscreen washer fluid reservoir. They are mounted on a common heat sink.

The amplifiers provide first stage amplification of low tension signals from the EZ 58F electronic control unit to the ignition coils.

Ignition coils (see fig. E5-6)
The ignition coils (group 1 and group 2) are located adjacent to the bulkhead on the right-hand side of the engine compartment to the rear of the windscreen washer fluid reservoir.

When the low tension to the coil primary winding is interrupted by its amplifier, high tension is induced in the coil secondary winding. This high tension is then passed to the ignition distributor.

Ignition distributor (see fig. E5-1)
The distributor assembly is mounted at the rear of the engine. It is driven by a gear situated on the end of the camshaft.

The unit incorporates two four pole ignition distributor caps connected by a toothed drive belt. A rotor arm in each cap distributes the high tension from the ignition coils to the sparking plugs.

Sparking plugs
The sparking plugs are NGK BPR 5 EV with the gap set to 1,0mm (0.040in).

Cylinder firing order
A1, A3, B3, A2, B2, B1, A4, B4.

Ignition system test procedures

Prior to commencing fault diagnosis on the EZ 58F digital electronic ignition control system it must be established that the mechanical functions of the engine are operating correctly, that the KE2-Jetronic fuel injection system is operating correctly, and that the battery is in a good state of charge.

When carrying out the following procedures it is essential that all workshop safety precautions and the precautions described in Section E2 are observed.

Equipment required

1. A stroboscopic ignition timing lamp
2. A suitable tachometer
3. A vacuum pump with a range of up to 635mm Hg (25in Hg)
4. A digital multi-meter
5. Equipment suitable for testing high tension (HT)

Note It is important that the test equipment used to check the ignition timing meets the following specification

Accuracy – Ignition timing within ± 1°
Rotational speed within ± 10 rev/min.

Basic fault diagnosis

The basic ignition system fault diagnosis chart given in figure E6-2 provides a list of basic symptoms and possible ignition system causes.

Note The symptoms described could also be caused by fuel system failure or boost control system failure.

The chart also indicates which ignition system test procedures should be carried out to rectify a specific problem. When carrying out a test procedure reference can also be made to the appropriate wiring diagram in Section E7.

Test procedures

High tension (HT)

1. Using suitable test equipment check for spark (HT) at a sparking plug during engine cranking.

If HT is present proceed to Operation 3.

2. Ensure that all HT leads, the ignition distributor caps, and the rotor arms are in good condition.

Using the multi-meter check the series suppression resistance of the ignition system components (see fig. E6-1), renew as necessary.

Note To remove a distributor cap depress each of the two retaining screws and rotate them a quarter of a turn anti-clockwise, then lift off the cap. Reverse the procedure to fit the cap.

Repeat Operation 1. If HT is not present proceed to Operation 4.

3. Referring to figure E5-3 ensure that the HT leads of the group 1 and group 2 ignition systems are not crossed. Also ensure the correct firing order A1, A3, B3, A2, B2, B1, A4, B4.

Using the multi-meter check the series suppression resistance of the ignition system components as given in figure E6-1. Renew components as necessary and re-test the system.

Component	**Resistance**
Rotor arms	1 KΩ ± 100 Ω
Ignition distributor towers	1 KΩ ± 100 Ω
HT leads	0.1 Ω – 0.5 Ω
Sparking plug connector caps	5 KΩ ± 100 Ω
Sparking plugs	5 KΩ ± 100 Ω

Take into account the internal resistance of test leads/probes when carrying out the above measurements.

Fig. E6-1 Ignition system components series suppression resistance

Primary ignition system

4. To enable Operations 5 to 8 inclusive to be carried out it is recommended that the windscreen washer fluid reservoir is removed.

5. Fold back the sleeving at each ignition amplifier plug. Switch on the ignition. Using the multi-meter measure the voltage between the black cable (earth) at pin 2 and the white cable (positive) at pin 4 on each ignition amplifier.

If a voltage reading cannot be obtained.

a. Verify that fuse B3 at fuseboard F1 is intact.

b. Ensure the continuity of the white cable at pin 4 of each ignition amplifier to fuse B3 at fuseboard F1.

c. Ensure the continuity of the black cable at pin 2 of each ignition amplifier to its earth connection.

If a voltage reading of less than 12 volts is obtained.

a. Check the condition of the battery. Rectify if necessary.

b. Referring to the wiring diagram in Section E7 ensure that no high resistance occurs in the routing of the white cables from pin 4 of each ignition amplifier to fuse B3 at fuseboard F1.

c. Ensure the integrity of the earth connection on the black cable at pin 2 of each ignition amplifier.

6. Using the multi-meter, measure the voltage between the white cable at terminal 15 of each ignition coil and a known earth point. Also measure the voltage between the white cable at pin 25 of the EZ 58F electronic control unit and a known earth point. In each case ensure that a 12 volts positive supply is available on the white cables.

If a voltage reading cannot be obtained ensure the continuity of the white cable to fuse B3 at fuseboard F1.

Ignition coils

7. Remove the protective cover from each ignition coil and inspect the blanking plug. If the plug is

displaced or sealing compound has escaped, fit a new coil.

Using the multi-meter and taking into account the resistance of the test leads, ensure the resistance of the primary and secondary windings at each ignition coil as follows.

Between terminals 1 and 15   0.4 Ω to 0.7 Ω
Between terminals 1 and 4   4.9 K Ω to 8.7 K Ω

If a reading is outside the limits fit a new coil.

Ignition amplifiers

8. Remove the ignition amplifier plugs and at each plug ensure continuity between the blue/black cable at pin 3 and the red cable at pin 5. Also ensure continuity of the white/black cable at pin 1 to its coil connection.

Re-connect the amplifier plugs. Carry out Operations 1, 2, and 3. If the ignition coils fail to generate HT replace the ignition amplifiers as necessary.

Crankshaft sensor

9. Disconnect the three-way plug and socket to the crankshaft sensor. Using the multi-meter ensure the following.

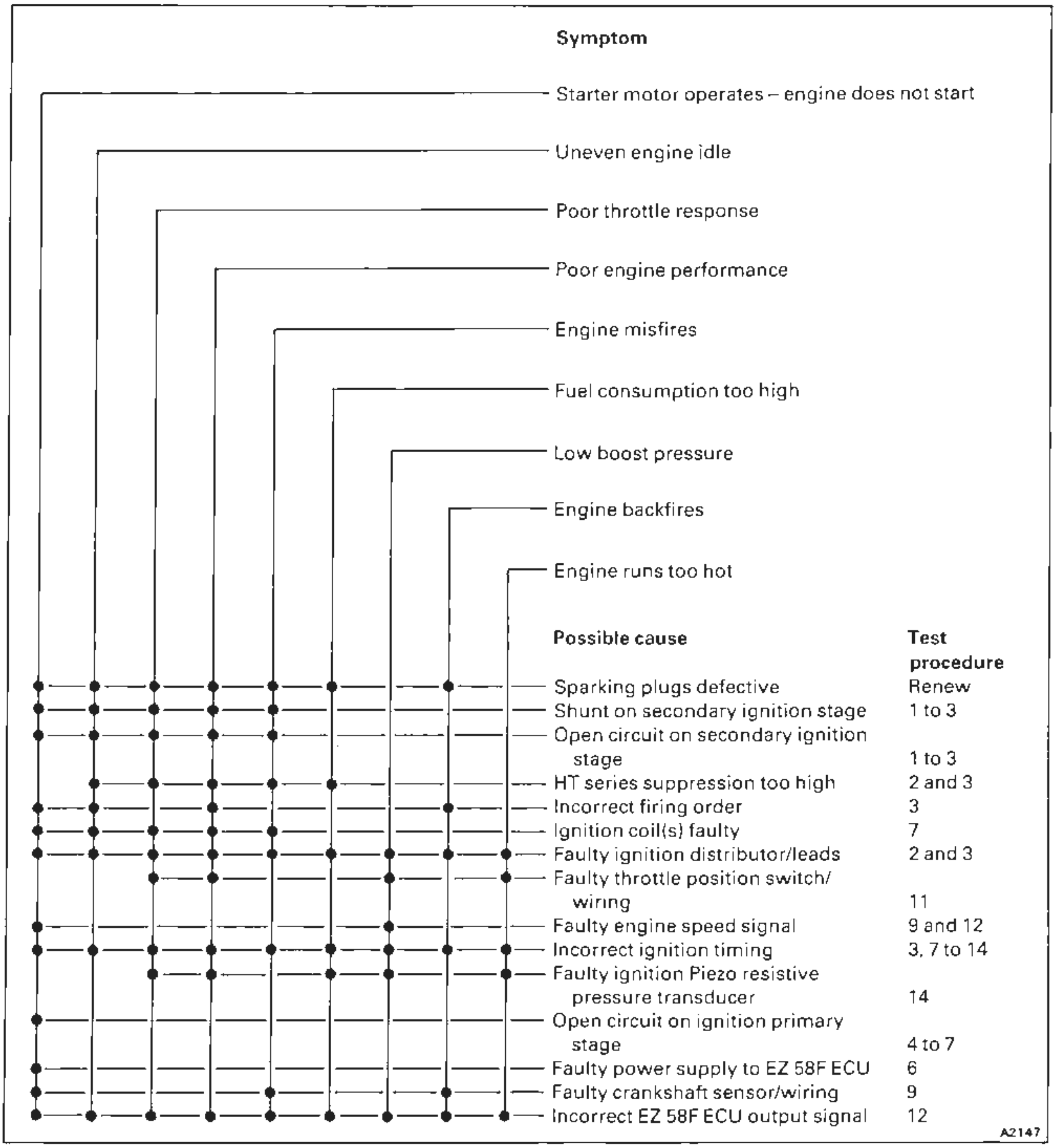

Symptom

Possible cause	Starter motor operates – engine does not start	Uneven engine idle	Poor throttle response	Poor engine performance	Engine misfires	Fuel consumption too high	Low boost pressure	Engine backfires	Engine runs too hot	Test procedure
Sparking plugs defective	●	●	●	●	●	●		●		Renew
Shunt on secondary ignition stage	●	●	●	●	●					1 to 3
Open circuit on secondary ignition stage	●	●	●	●	●					1 to 3
HT series suppression too high		●	●	●	●	●				2 and 3
Incorrect firing order	●	●		●				●		3
Ignition coil(s) faulty	●	●	●	●	●					7
Faulty ignition distributor/leads	●	●	●	●	●	●	●	●	●	2 and 3
Faulty throttle position switch/ wiring			●	●			●		●	11
Faulty engine speed signal	●						●			9 and 12
Incorrect ignition timing	●	●	●	●	●	●	●	●	●	3, 7 to 14
Faulty ignition Piezo resistive pressure transducer			●	●		●	●		●	14
Open circuit on ignition primary stage	●									4 to 7
Faulty power supply to EZ 58F ECU	●									6
Faulty crankshaft sensor/wiring	●				●			●		9
Incorrect EZ 58F ECU output signal	●	●	●	●	●	●	●	●	●	12

Fig. E6-2 Ignition system fault diagnosis chart

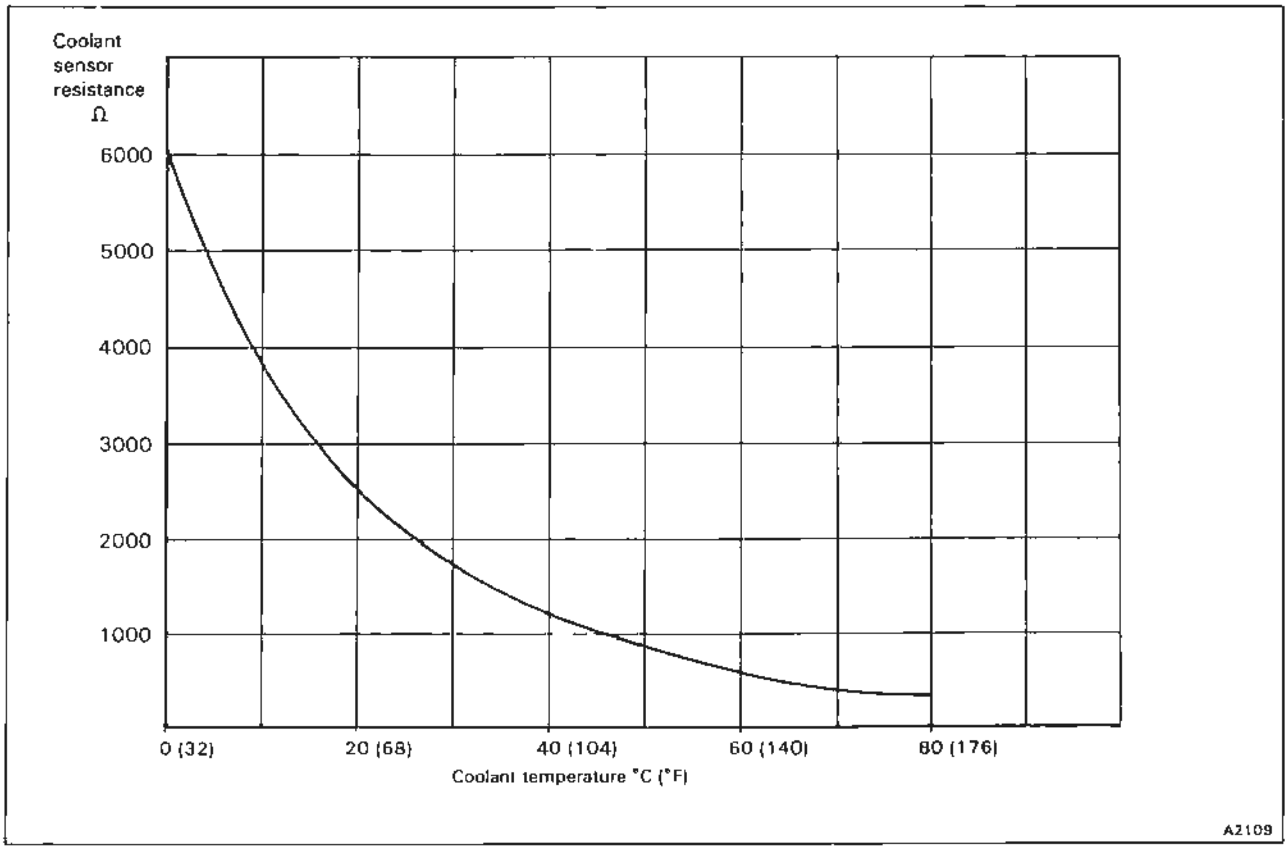

Fig. E6-3 Engine coolant temperature sensor resistance characteristic graph

a. The continuity of the blue cable at pin 1 of the loom connector to pin 7 of the EZ 58F electronic control unit.

b. The continuity of the brown cable at pin 2 of the loom connector to pin 19 of the EZ 58F electronic control unit.

c. The internal resistance of the crankshaft sensor, measured between pins 1 and 2 of the sensor connection, is between 0.6 KΩ and 1.6 KΩ.

If the measurement is outside these limits fit a new sensor. Re-make all connections.

Engine coolant temperature sensor

10. The sensor provides information to both the EZ 58F electronic control unit (via the green/blue cable) and the KE2-Jetronic fuel injection system electronic control unit (via the yellow/blue cable).

Disconnect the plug from both the EZ 58F electronic control unit and from the KE2-Jetronic fuel injection system electronic control unit.

Using the multi-meter ensure the following.

a. Continuity of the black cable at pin 10 of the EZ 58F electronic control unit plug to its earth connection.

b. Continuity of the green/blue cable at pin 23 of the EZ 58F electronic control unit plug to the engine coolant temperature sensor.

c. Resistance measured between pins 10 and 23 of the EZ 58F electronic control unit plug compares with the sensor resistance characteristic graph given in figure E6-3.

Note Under service conditions it may not be practical to gauge precise engine coolant temperature. Therefore carrying out the test with a cold engine (e.g. after the car has stood overnight) would mean that coolant temperature and ambient air temperature would be similar.

Throttle position switch

11. The throttle position switch provides information to both the EZ 58F electronic control unit and to the KE2-Jetronic fuel injection system electronic control unit.

Disconnect the plug from the EZ 58F electronic control unit and from the KE2-Jetronic electronic control unit.

Using the multi-meter and referring to the wiring diagram in Section E7 ensure the following.

a. Continuity of the blue/purple cable at pin 4 of the EZ 58F electronic control unit plug to its connection at the throttle position switch.

b. Continuity of the yellow/purple cable at pin 17 of the EZ 58F electronic control unit plug to its connection at the throttle position switch.

c. Continuity of the black cable at the throttle position switch to its earth connection.

d. With the throttle plates closed only switch contacts 2 and 18 are connected (see fig. E6-4).

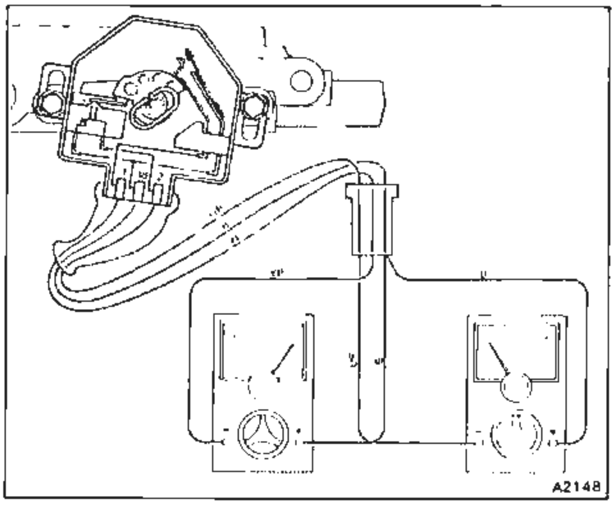

Fig. E6-4 **Throttle position switch – idle speed condition**

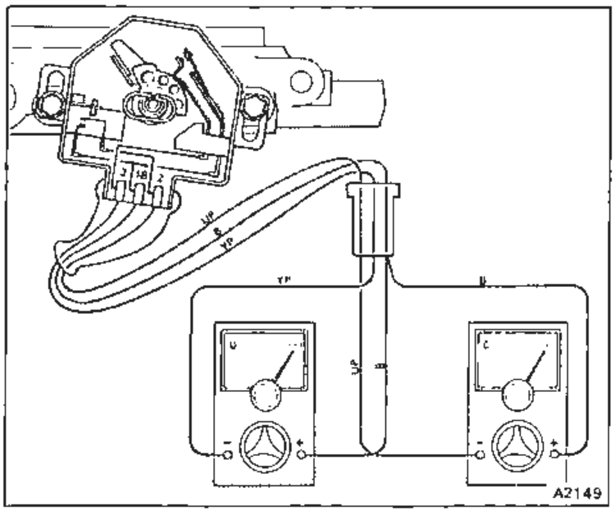

Fig. E6-5 **Throttle position switch – part load condition**

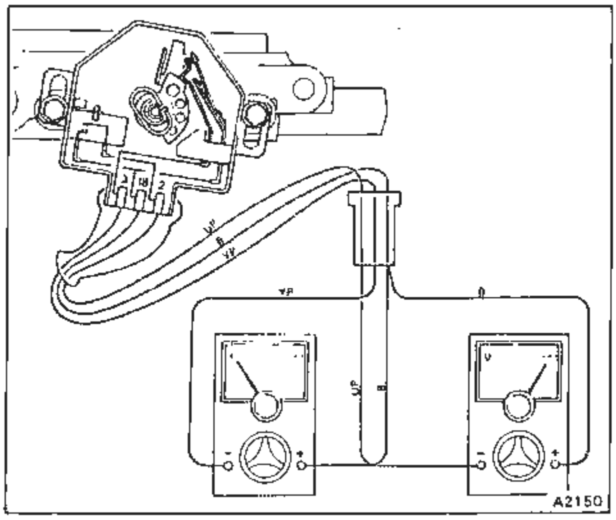

Fig. E6-6 **Throttle position switch – full load condition**

e. With the throttle plates just off the idle position (confirmed by an audible click) switch contacts 2, 3, and 18 are open circuit i.e. not connected (see fig. E6-5).

f. With the throttle plates fully open (the switching point is just before full throttle and there is no audible click), only switch contacts 3 and 18 are connected (see fig. E6-6).

g. Restore all connections.

EZ 58F ignition electronic control unit

12. With the operation of both the engine coolant temperature sensor and throttle position switch proved correct, the following check is sufficient to confirm the correct ignition/engine coolant temperature response of the EZ 58F electronic control unit.

a. Start and run the engine. With the engine coolant at normal operating temperature i.e. above 80°C (176°F) disconnect the two-way plug from the electro hydraulic actuator (see fig. E6-11).

Note It is necessary to disconnect the electro hydraulic actuator (EHA) to prevent over-fuelling when the engine coolant temperature sensor is disconnected. However, disconnecting the EHA will cause some deterioration of engine idling quality.

b. Disconnect the throttle position switch plug and socket.

Using a length of cable with suitable connections bridge the EZ 58F electronic control unit to initiate the ignition idle speed map.

The bridge should be made at the black and blue/purple connections on the control unit side of the throttle position switch plug and socket.

c. Partly open the engine throttles to set a stabilized engine speed at approximately 700 rev/min. Using a stroboscopic timing light, connected in accordance with the manufacturer's instructions, measure the degree of ignition advance at the crankshaft damper timing marks (see fig. E6-12).

d. Disconnect the two-way connector from the engine coolant temperature sensor. Check that the ignition timing has advanced by 2° btdc.

Should this check not prove satisfactory renew the EZ 58F electronic control unit.

Restore all plug and socket connections to return the system to basic engine settings.

Ignition timing

13. All ignition timing checks must be carried out with the engine speed stabilized and with the engine coolant at normal operating temperature i.e. above 80°C (176°F).

Note Although engine settings are carried out with the air conditioning system switched on and with the compressor clutch engaged, it will prove more convenient to carry out the following checks with the air conditioning system switched off. However, it is essential that when re-setting the engine idle speed at the conclusion of these checks, the air conditioning system is switched on and the compressor clutch is engaged.

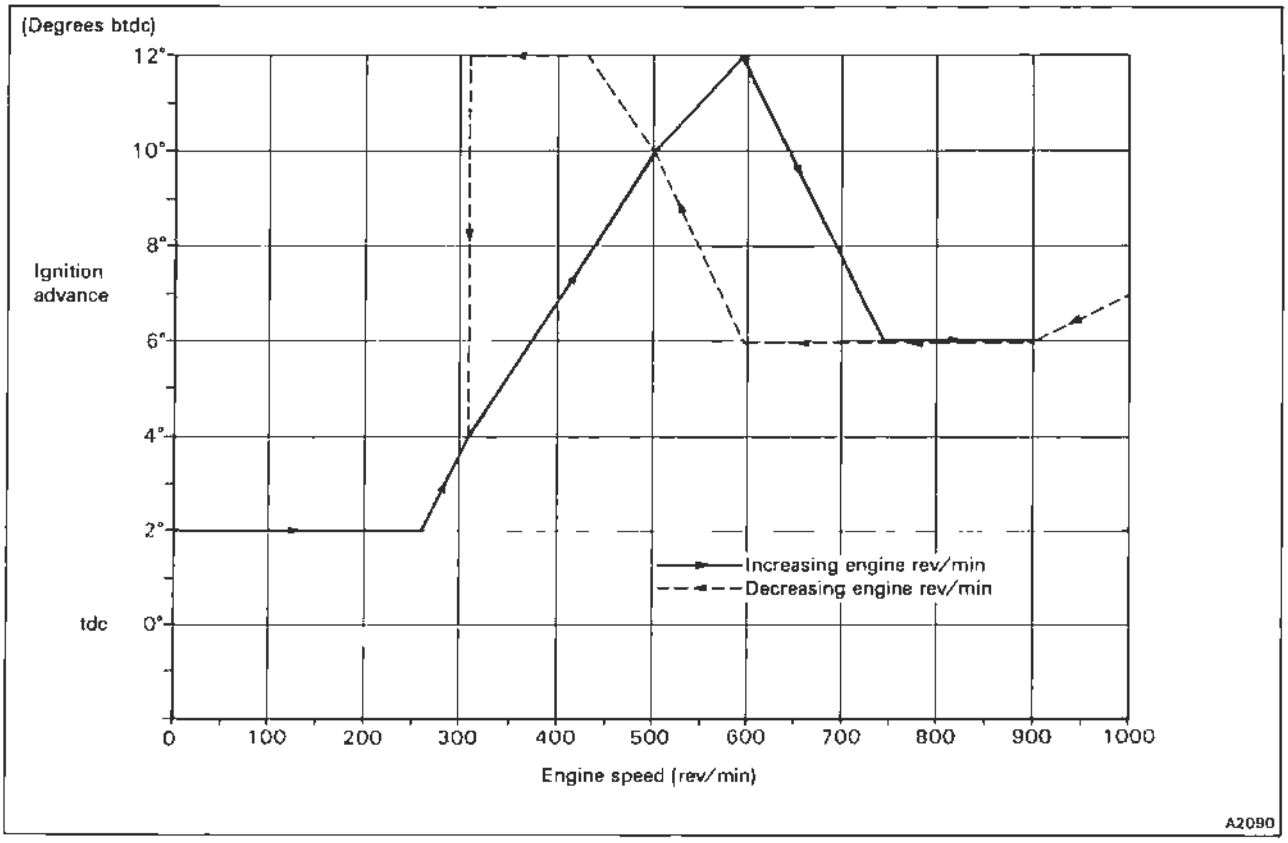

Fig. E6-7 **Cranking and low rev/min stabilization map**

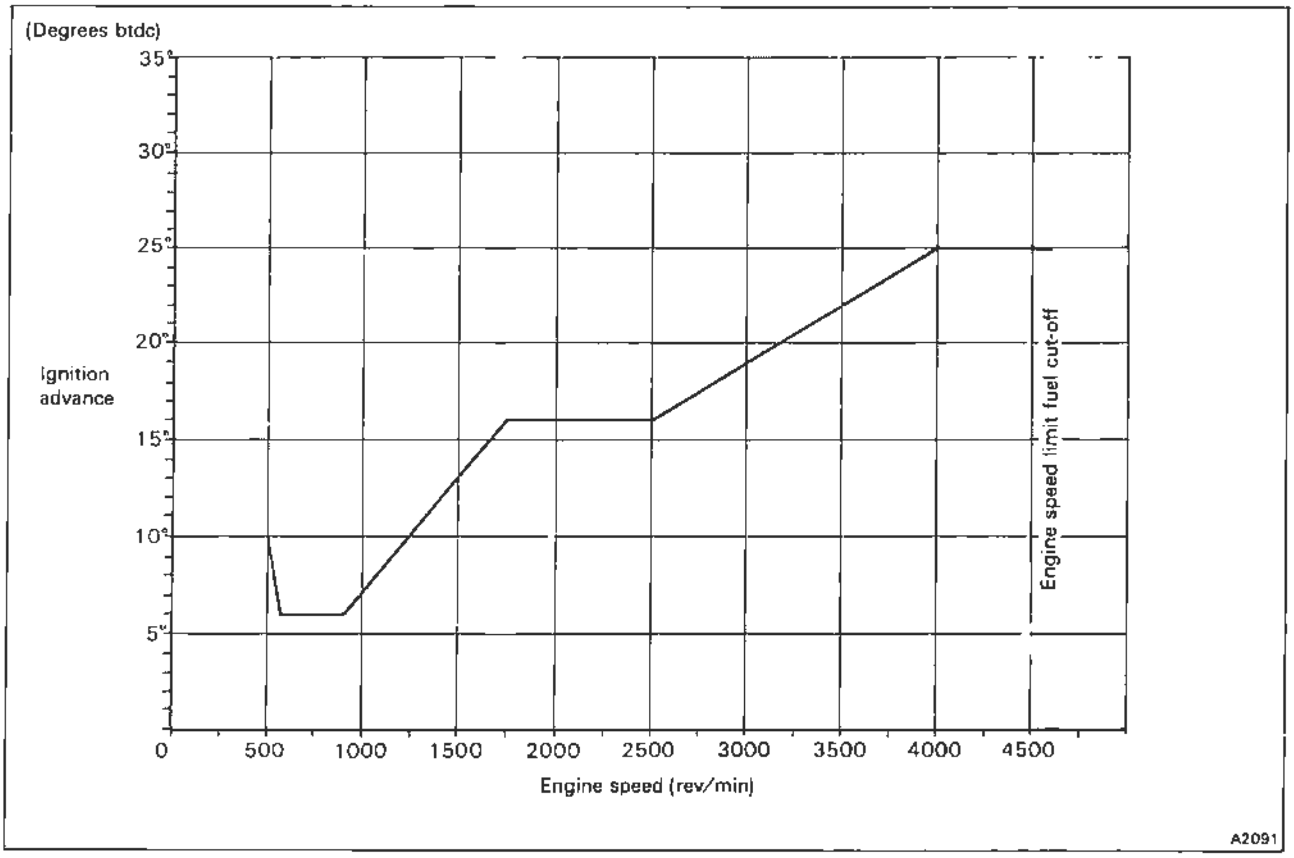

Fig. E6-8 **Idle speed/overrun map**

Absolute manifold pressure

m bar	mm Hg	4000	3500	3000	2750	2500	2250	2000	1750	1500	1300	1100	900	744	598	500	430
255	191	36	34	26	24	22	16	12	10	8	6	6	6	6	6	6	6
340	255	36	34	30	26	24	20	16	12	10	8	8	6	6	6	6	6
425	320	41	43	40	34	34	30	26	22	20	18	14	10	8	6	6	6
510	382	44	46	46	46	44	44	38	32	28	24	18	16	12	10	8	8
595	446	44	46	46	44	44	44	40	34	30	26	22	16	14	10	8	8
675	506	44	46	46	44	42	42	40	34	30	26	24	18	16	12	10	8
760	570	44	44	44	43	40	41	40	36	28	24	24	20	17	13	12	10
845	633	40	40	42	42	38	38	36	32	26	24	22	18	17	14	14	12
930	697	35	34	36	36	36	34	33	28	24	22	20	18	17	15	15	13
1015	791	32	32	34	34	32	30	28	26	23	22	18	16	16	15	15	13
1100	825	27	27	28	28	28	28	26	24	23	21	18	16	16	15	15	13
1185	889	27	24	23	23	23	24	23	22	22	20	18	15	14	14	15	13
1270	952	27	24	22	22	22	23	22	20	20	18	17	14	13	13	14	12
1355	1016	26	25	22	21	21	21	21	18	16	14	13	12	11	10	10	8
1440	1080	24	22	20	20	20	18	16	14	12	10	10	10	9	8	8	8
1525	1144	12	16	18	18	18	16	14	12	10	8	8	8	8	8	8	8

Engine speed (rev/min)

A2089

Fig. E6-9 Part load map (degrees btdc)

The part load map extrapolates last point ignition advance values beyond 4000 rev/min, i.e. at 4000 rev/min and absolute manifold pressure at 1525 mbar (1144mm Hg) ignition advance is 12° btdc. At 4600 rev/min and absolute manifold pressure at 1525 mbar (1144mm Hg) ignition advance is 12° btdc.

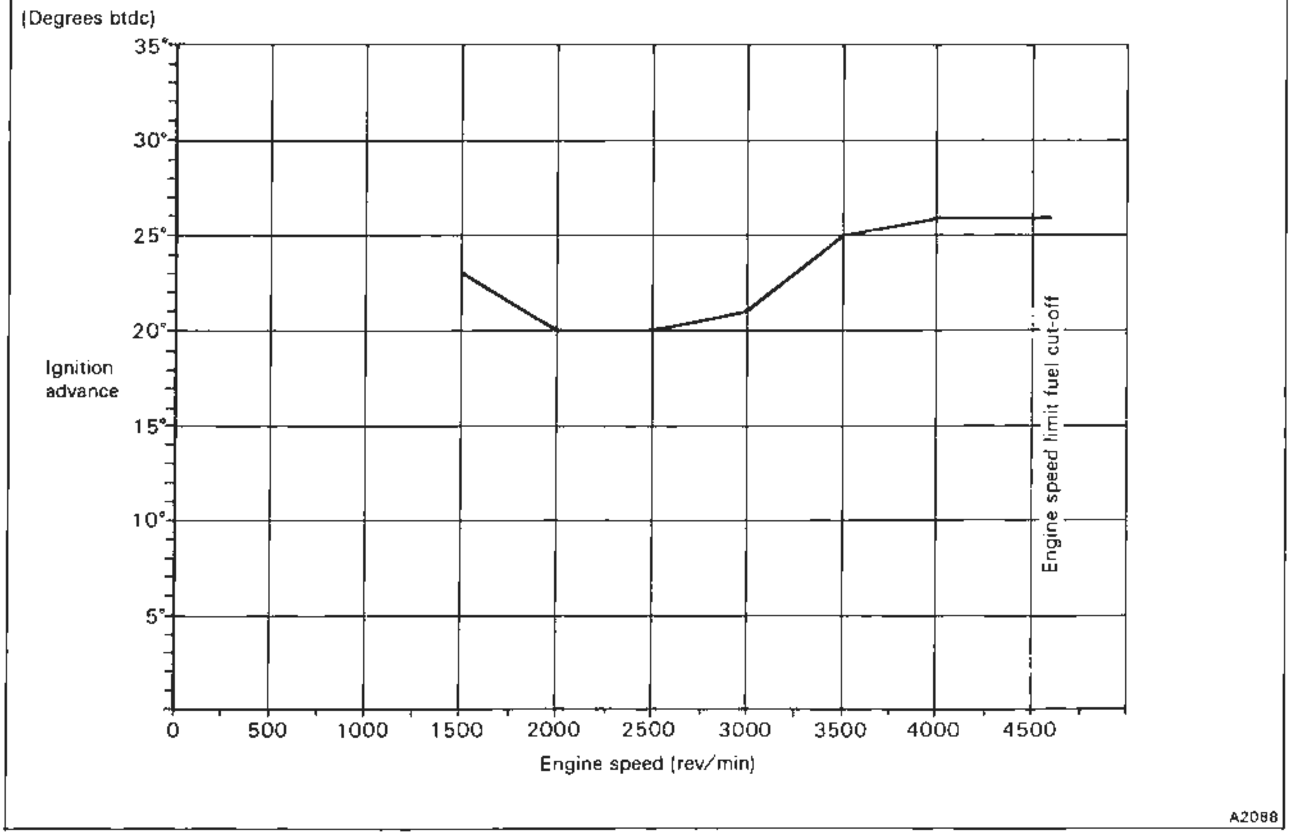

Fig. E6-10 Full load map

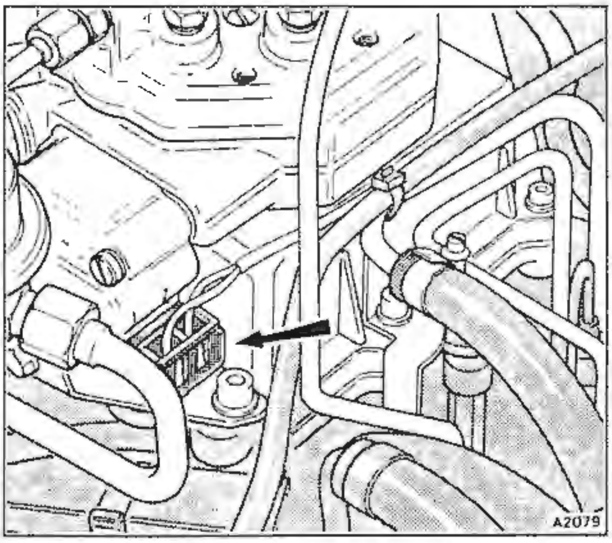

Fig. E6-11 **Electro hydraulic actuator**

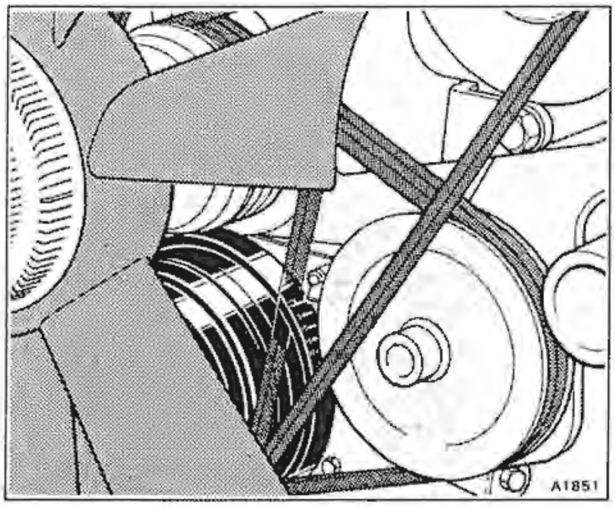

Fig. E6-12 **Crankshaft damper timing marks**

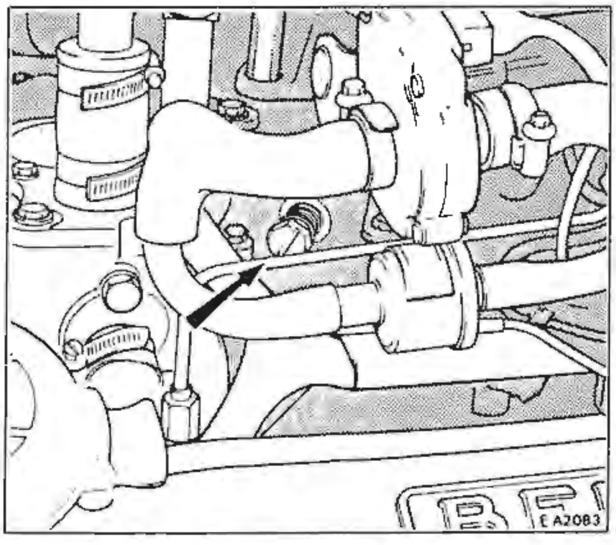

Fig. E6-13 **Idle speed adjustment screw**

Connect a stroboscopic timing light and a tachometer in accordance with the manufacturer's instructions.

Using the idle speed adjustment screw (see fig. E6-13) set the engine idle speed to 580 rev/min ± 10 rev/min. Clockwise rotation of the screw reduces the rev/min, conversely anti-clockwise rotation increases the rev/min.

Check that the ignition timing is 7° btdc ± 1° btdc.

Using the idle speed adjustment screw, reduce the engine idle speed to 500 rev/min ± 10 rev/min.

Check that the ignition timing is 10° btdc ± 1° btdc.

If the ignition timing is outside the specified limits it will be necessary to renew the EZ 58F electronic control unit.

Return the engine idle speed to the basic setting of 580 rev/min with the air conditioning system switched on and with the compressor clutch engaged.

Switch off the ignition.

Ignition system Piezo resistive pressure transducer

14. Disconnect the vacuum hose from the EZ 58F electronic control unit at the induction manifold. Blank off the manifold tapping. Connect the Mityvac pump RH 12495 to the hose from the EZ 58F electronic control unit.

Start the engine and allow to idle. Apply a vacuum of 508mm Hg (20in Hg) to the ignition hose. This should result in a decrease in engine speed of approximately 100 rev/min.

If no decrease occurs, check the induction manifold hose for leaks or blockage between the vacuum pump and the EZ 58F electronic control unit. If no leaks or blockage are present, the Piezo resistive pressure transducer within the EZ 58F electronic control unit is faulty. Renew the unit.

Switch off the ignition. Remove all test equipment and restore all connections.

15. For more detailed information concerning the EZ 58F electronic control unit ignition maps refer to figures E6-7 to E6-10 inclusive.

Ignition circuits

Contents

	Pages						
	Rolls-Royce			**Bentley**			
	Silver Spirit	Silver Spur	Corniche / Corniche II	**Eight**	**Mulsanne / Mulsanne S**	**Turbo R**	**Continental**
Wiring diagram and component location	E7-3	E7-3	E7-3	E7-3	E7-3	E7-6	E7-3

Printed in England

Ignition circuit

Wiring diagram and component location

Naturally aspirated engines

Printed in England

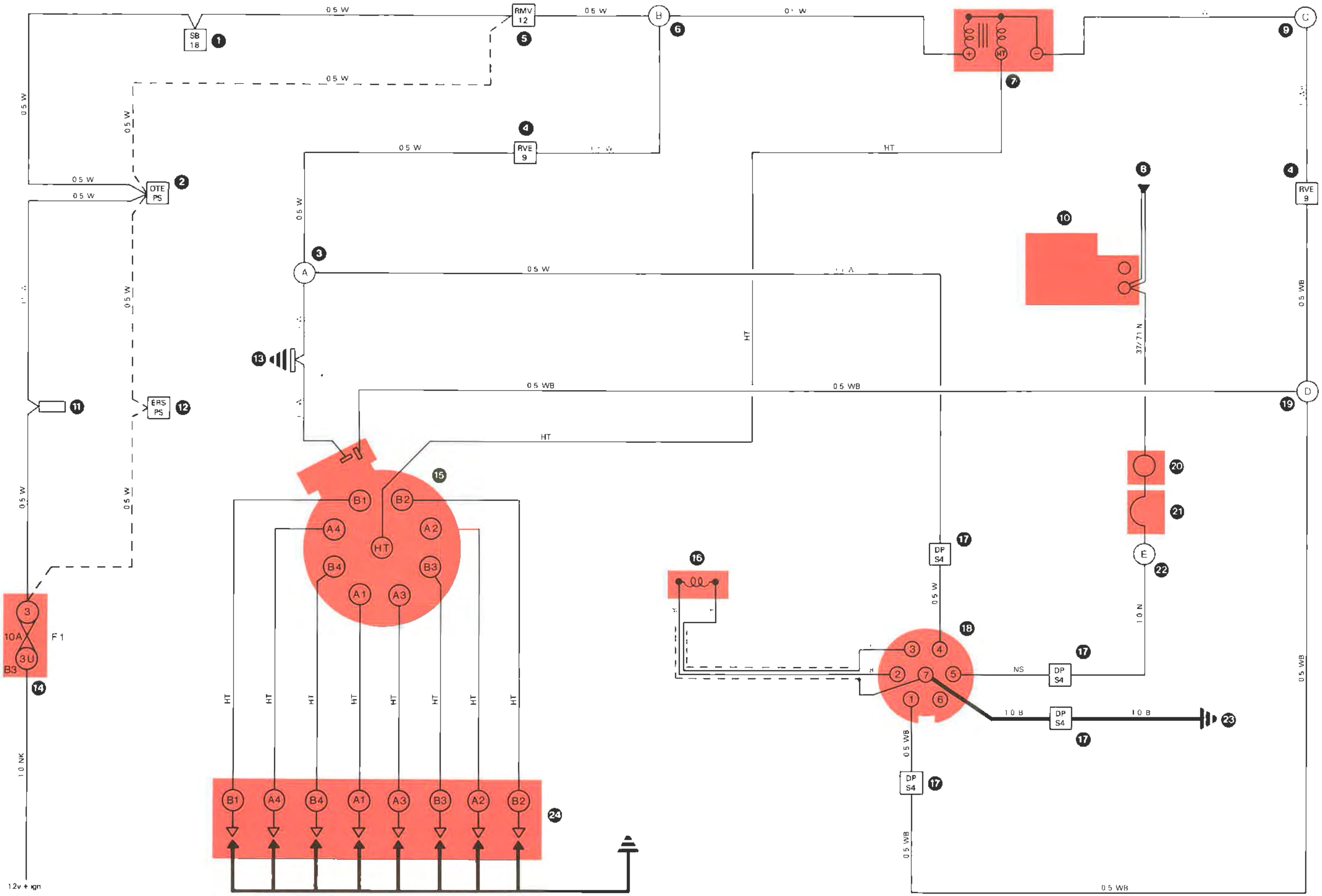

SB 18
1
0.5 W
RMV 12
5
B
6
0.5 W
C
9
7
HT
0.5 W
4
RVE 9
OTE PS
2
A
3
10
8
37/71 N
0.5 WB
D
19
13
11
ERS PS
12
15
B1
B2
A4
A2
HT
B4
B3
A1
A3
20
21
E
22
16
17
DP S4
18
3
4
2
7
5
1
6
NS
1.0 N
1.0 B
23
3
10A
3U
B3
F1
14
1.0 NK
12v + ign
24

1 Switchbox plug and socket 18-way
2 'Other than Europe' plug and socket
3 Splice A

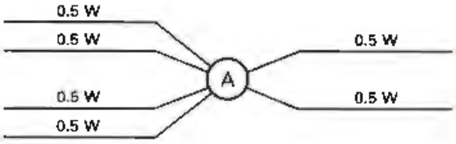

4 Right-hand valance to engine loom plug and socket 9-way
5 Right-hand main to valance loom plug and socket 12-way
6 Splice B

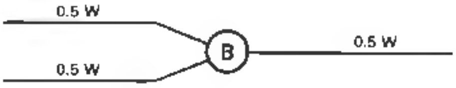

7 Ignition coil
8 12 volts positive supply from battery master switch connection
9 Splice C

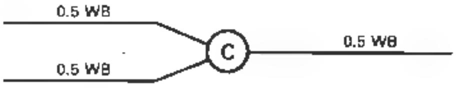

10 Starter motor
11 Speedometer connection – positive
12 Engine running sensor plug and socket
13 Distributor suppressor
14 Fuseboard F1, fuse B3, 10 Amp
15 Distributor assembly
16 Engine crankshaft sensor
17 Diagnostic plug and socket 4-way
18 Diagnostic socket
19 Splice D

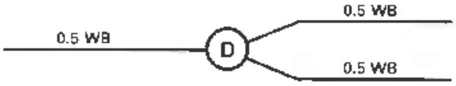

20 Alternator connection
21 Fusible link (at alternator)
22 Splice E

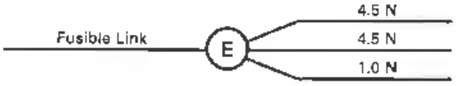

23 Engine earth point
24 Sparking plugs

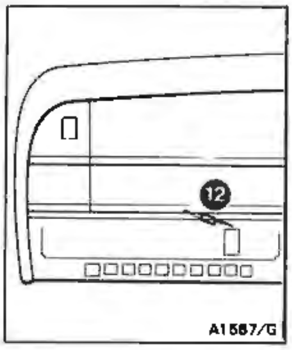

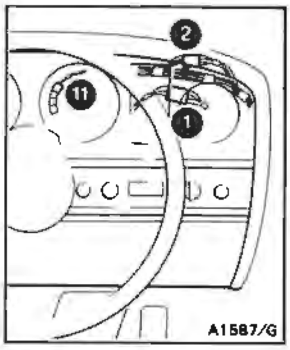

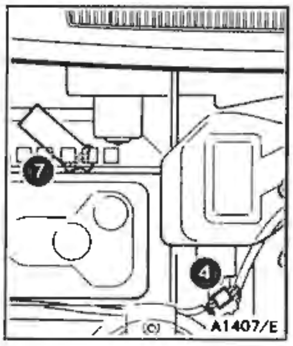

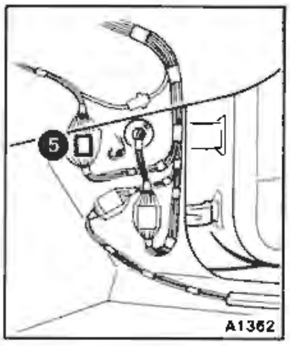

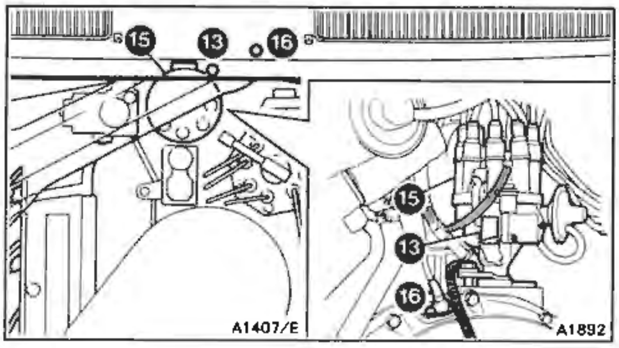

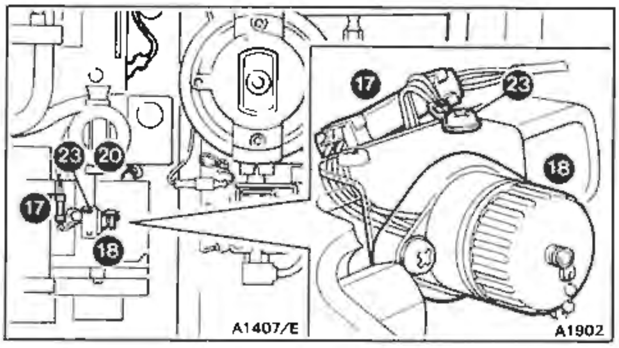

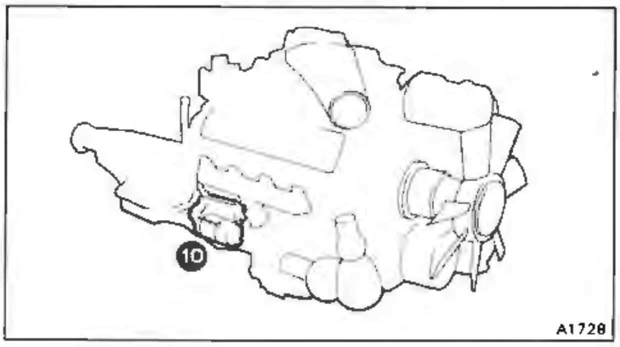

2/87
Printed in England

Ignition circuit

Wiring diagram

Turbocharged engines

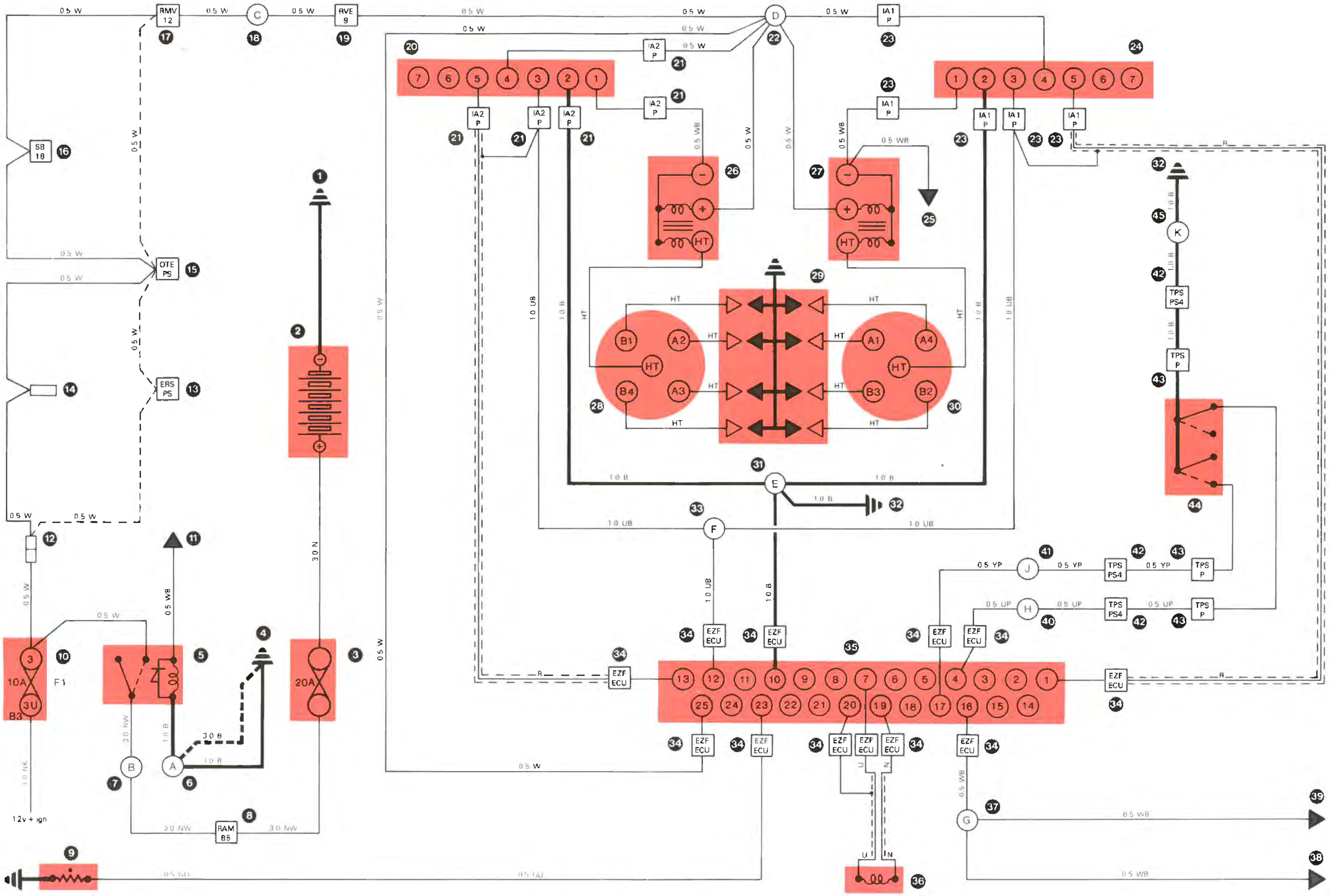
RMV 12
OTE PS
ERS PS
SB 18
RVE 9
IA1 P
IA2 P
TPS PS4
TPS P
EZF ECU
RAM B5
10A
3U
B3
F1
20A
HT
B1
A2
B4
A3
A1
A4
B3
B2
A
B
C
D
E
F
G
H
J
K
U
N
0.5 W
0.5 WB
0.5 YP
0.5 UP
0.5 GU
1.0 B
1.0 UB
1.0 NK
3.0 N
3.0 B
3.0 NW
R
12v + ign
1
2
3
4
5
6
7
8
9
10
11
12
13
14
15
16
17
18
19
20
21
22
23
24
25
26
27
28
29
30
31
32
33
34
35
36
37
38
39
40
41
42
43
44
45

Ignition circuit

Component location

Turbocharged engines

1 Battery earth point
2 Battery
3 Memory fuse, 20 Amp (located in the luggage compartment)
4 'A' post earth point
5 Cranking interlock relay
6 Splice A

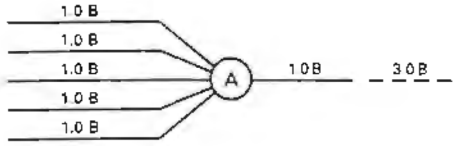

7 Splice B

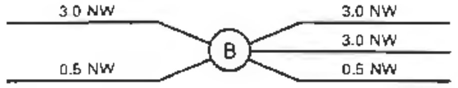

8 Right-hand 'A' post main to body loom plug and socket 5-way
9 Engine coolant temperature sensor
10 Fuseboard F1, fuse B3, 10 Amp
11 12 volts positive supply when engine is cranking
12 Turbo ignition link connection
13 Engine running sensor plug and socket
14 Speedometer connection — positive
15 'Other than Europe' plug and socket
16 Switchbox plug and socket 18-way
17 Right-hand main to valance loom plug and socket 12-way
18 Splice C

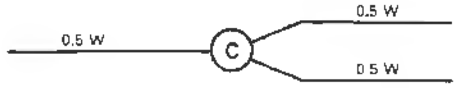

19 Right-hand valance to engine loom plug and socket 9-way
20 Group 2 ignition amplifier
21 Group 2 ignition amplifier plug
22 Splice D

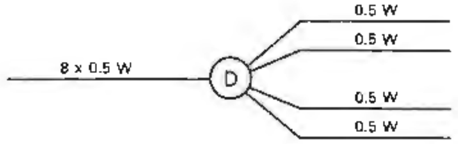

23 Group 1 ignition amplifier plug
24 Group 1 ignition amplifier
25 To tachometer
26 Group 2 ignition coil
27 Group 1 ignition coil
28 Group 2 ignition distributor
29 Sparking plugs
30 Group 1 ignition distributor
31 Splice E

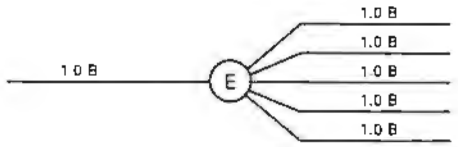

32 Engine earth point
33 Splice F

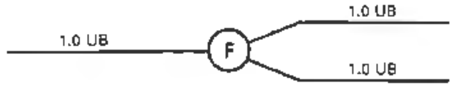

34 EZ 58F electronic control unit plug
35 EZ 58F electronic control unit
36 Engine crankshaft sensor
37 Splice G

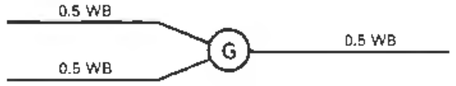

38 To fuel injection system electronic control unit
39 To knock sensor electronic control unit
40 Splice H

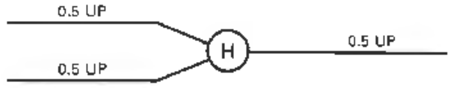

41 Splice J

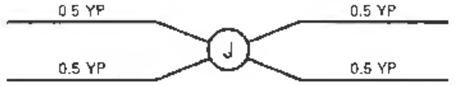

42 Throttle position switch plug and socket 4-way
43 Throttle position switch plug
44 Throttle position switch
45 Splice K

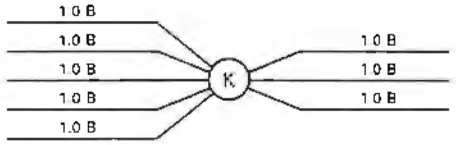

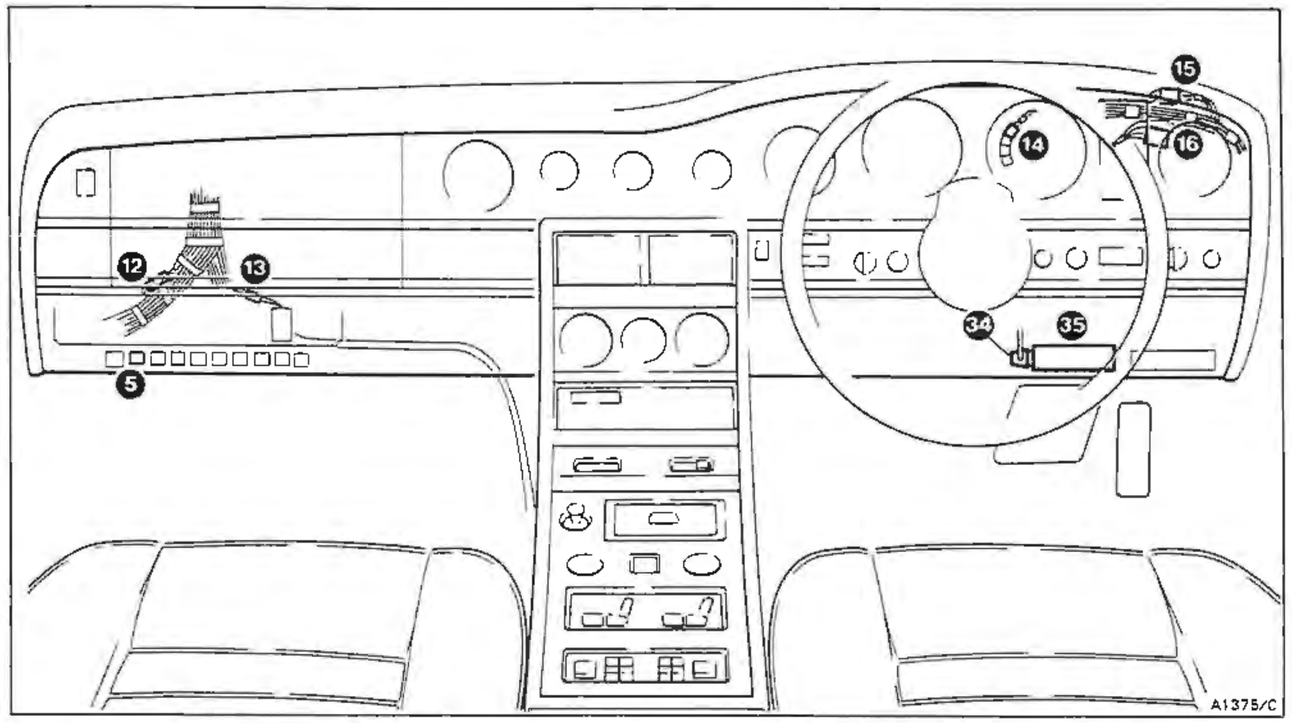

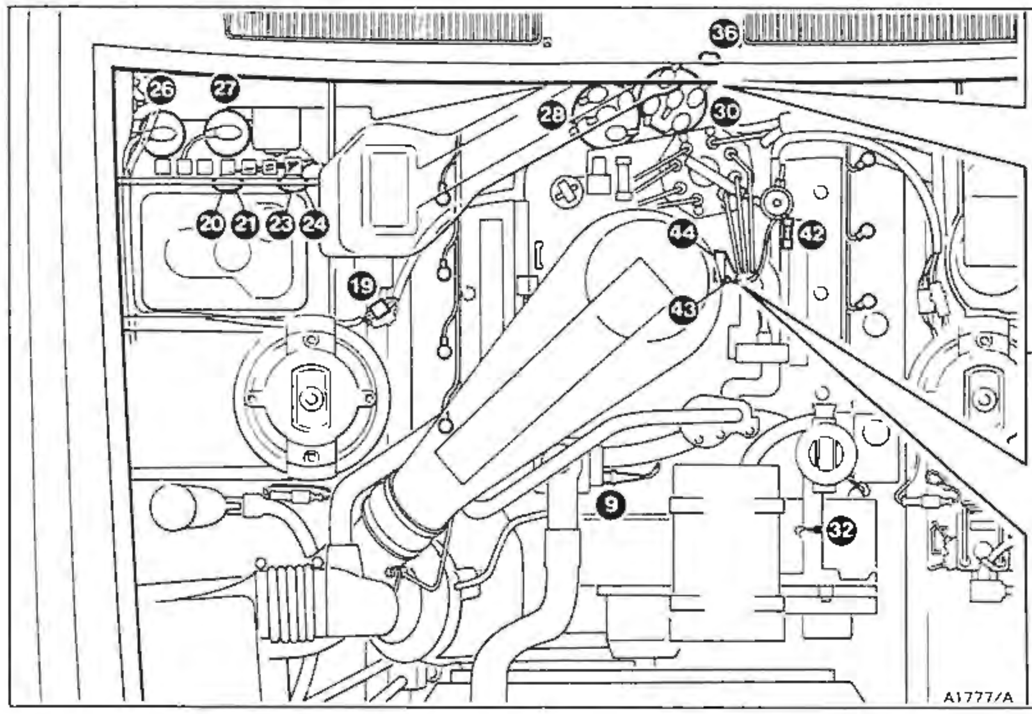

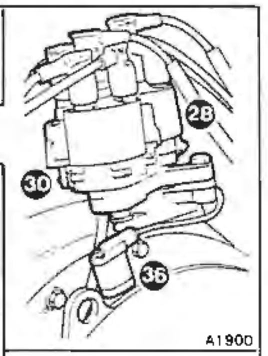

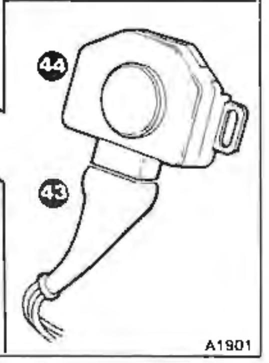

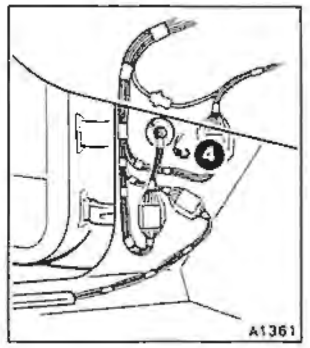

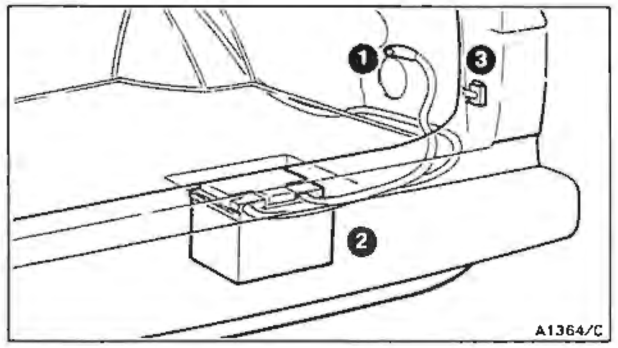

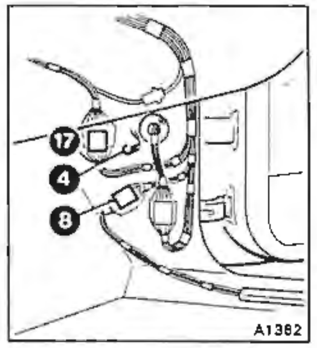

Exhaust emission control system

Contents	Sections						
	Rolls-Royce			Bentley			
	Silver Spirit	Silver Spur	Corniche / Corniche II	Eight	Mulsanne / Mulsanne S	Turbo R	Continental
Contents and issue record sheet	F1	F1	F1	F1	F1	F1	F1
1987/88/89 model year Naturally aspirated cars							
Introduction	F2	F2	F2	F2	F2	–	F2
Exhaust gas recirculation system	F3	F3	F3	F3	F3	–	F3
Air injection system	F4	F4	F4	F4	F4	–	F4
Three-way catalyst system	F5	F5	F5	F5	F5	–	F5
1989 model year Turbocharged cars							
Introduction	–	–	–	–	–	F6	–
Air injection system	–	–	–	–	–	F7	–
Catalytic converter system	–	–	–	–	–	F8	–

Printed in England

Issue record sheet

The dates quoted below refer to the issue date of individual pages within this chapter.

Sections	F1	F2	F3	F4	F5	F6	F7	F8		
Page No.										
1	10/88	11/86	11/86	11/86	11/86	10/88	10/88	10/88		
2			5/87	10/88	11/86	10/88	10/88	10/88		
3	10/88		5/87	11/86	11/86		10/88	10/88		
4					—		10/88	—		
5					11/86		10/88	10/88		
6							—			
7							10/88			
8										
9										
10										
11										
12										
13										
14										
15										
16										
17										
18										
19										
20										
21										
22										
23										
24										
25										
26										
27										
28										
29										
30										
31										
32										
33										
34										
35										
36										
37										
38										
39										
40										
41										
42										
43										
44										
45										
46										
47										
48										
49										
50										
51										
52										
53										
54										

Printed in England

Introduction

The contents of this Chapter apply to cars conforming to an Australian, Japanese, or North American specification. All have naturally aspirated engines.

The exhaust emission control system (see fig. F2-1) is designed to reduce the carbon monoxide, hydrocarbon, and oxides of nitrogen content in the exhaust gases.

To comply with current exhaust emission control regulations, cars produced to these specifications are fitted with a **three-way catalytic converter** in place of the conventional front silencer.

In order to achieve maximum efficiency the catalytic converter requires very accurate control of the engine air/fuel ratio. This is accomplished by the use of a continuous fuel injection system with 'closed loop' mixture control (refer to Chapter B).

Dependent upon the specification of the vehicle the following additional systems are fitted to improve the control of exhaust emissions.

The **exhaust gas recirculation system** recirculates a proportion of the exhaust gas from 'B' bank exhaust pipe, through a vacuum operated metering valve into the induction manifold.

The recirculation of exhaust gas lowers the peak combustion temperature and therefore, reduces the oxides of nitrogen content of the exhaust gas.

The **air injection system** comprises a belt driven pump, that during the warm-up period passes air via an air switching valve and check valves to the exhaust manifolds.

The injected air combines with the exhaust from the combustion chambers to promote oxidation of the gases and reduce the catalytic converter warm-up time.

Whenever the coolant temperature is above 33°C (91°F), the air switching valve vents the output from the air pump into the engine air intake system.

For details of the servicing and maintenance requirements of the exhaust emission control system, refer to the Service Schedules Manual TSD 4702.

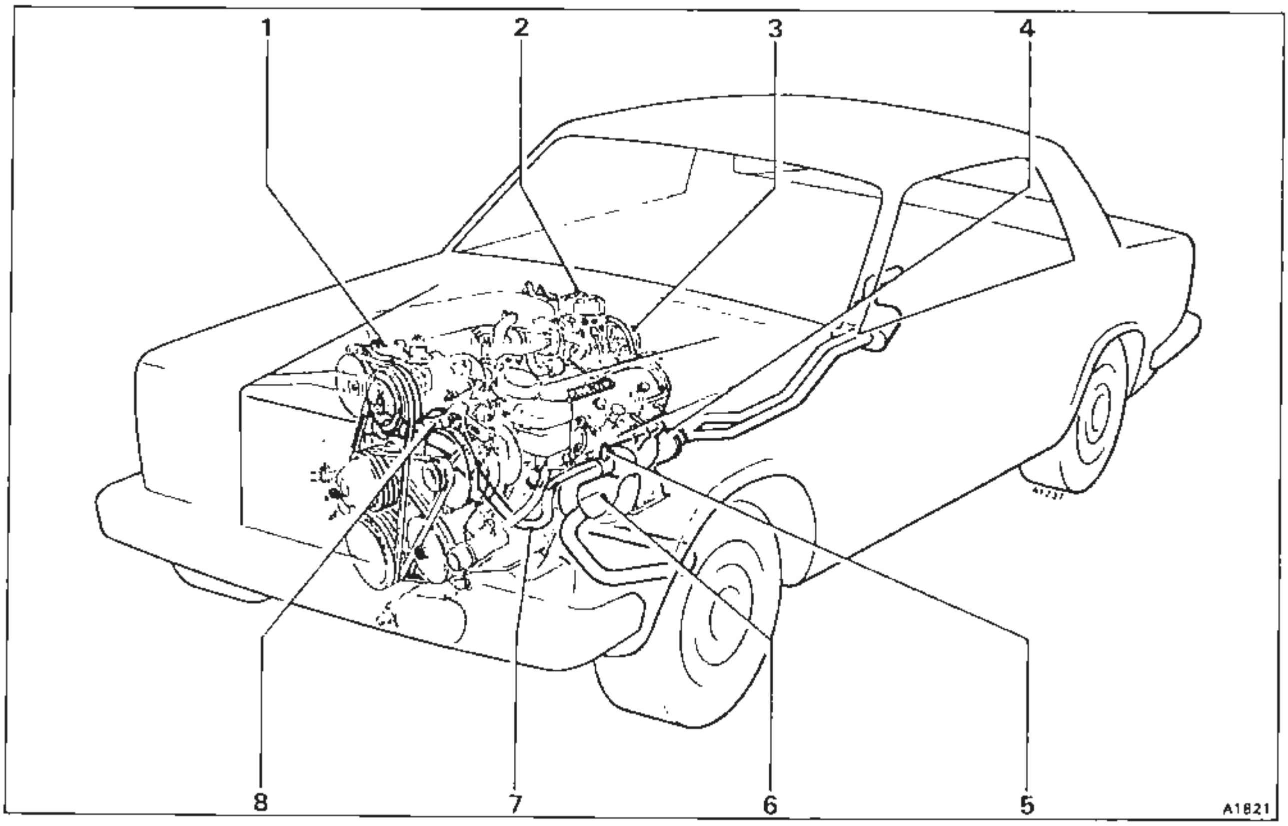

Fig. F2-1 Exhaust emission control system

1 Air pump
2 Air meter and fuel distributor assembly
3 Exhaust gas recirculation valve
4 Catalytic converter
5 Oxygen sensor
6 'B' bank exhaust manifold
7 'B' bank air manifold
8 Air switching valve

11/86
Printed in England

Exhaust gas recirculation system

A proportion of the exhaust gas taken from a connection on the 'B' bank exhaust pipe, is recirculated through a vacuum operated exhaust gas recirculation (EGR) valve, into the induction manifold where it mixes with the intake air (see fig. F3-1). Substantially atmospheric pressure is maintained downstream of the metering valve, so that the recirculation flow is proportional to the exhaust gas flow.

The recirculation of the exhaust gas lowers the peak combustion temperature in the cylinders, reducing the level of oxides of nitrogen in the exhaust gases.

Exhaust gas recirculation (EGR) valve

(see figs. F3-2 and F3-3)

The EGR valve incorporates an integral pressure transducer. Located in an extension of the valve seat is a metering orifice.

A throttle gated vacuum signal is used to operate the valve. This signal is modulated by the integral transducer and applied to the control valve diaphragm. This varies the lift of the control valve, thus maintaining a constant control pressure (just above atmospheric pressure) between the metering orifice and the valve seat.

When the engine load is increased, the control pressure exceeds the transducer setting and the transducer valve closes. The full vacuum signal is then applied to the control valve diaphragm, opening the control valve and increasing the EGR flow.

Similarly, as the engine load is reduced, the control pressure becomes less than the transducer setting and the transducer valve opens, venting the diaphragm chamber to atmosphere. This causes the control valve to close and reduce the EGR flow.

The transducer valve continuously varies the control valve lift to maintain a constant control pressure under all normal operating conditions.

The use of a throttle gated vacuum signal ensures complete control valve closure at idle to maintain good idle quality.

To improve starting and drive-away during low temperature conditions, a solenoid valve interrupts the throttle gated vacuum signal to the EGR valve, until a predetermined coolant temperature is sensed. The temperature is sensed by a switch located in the thermostat housing.

A throttle position switch also operates the solenoid to cut-out exhaust gas recirculation at wide throttle openings.

Fitting components to the exhaust gas recirculation system

It is recommended that prior to fitting components the threads of nuts, bolts, and setscrews are smeared with Never-seez anti-seize compound.

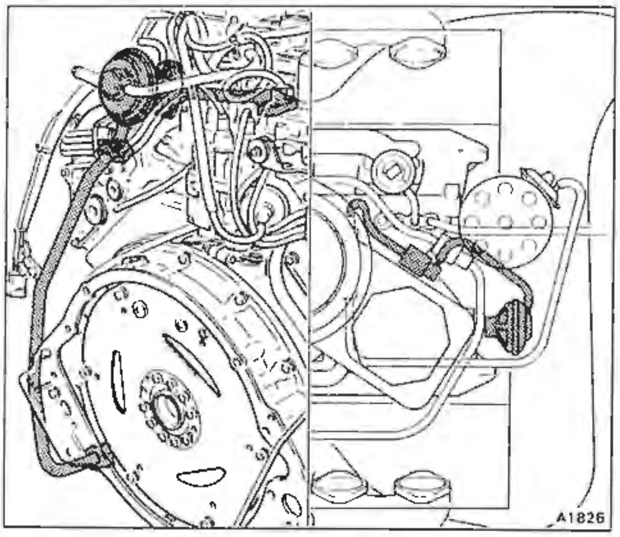

Fig. F3-1 Exhaust gas recirculation system

Any sealing rings, pipe flares, or the grooves in the split clamps should be lightly smeared with either graphite or Never-seez compound. This will assist alignment of the parts upon assembly.

Do not allow the compound to enter the exhaust system, particularly up-stream (in front) of the catalytic converter, otherwise damage to the converter assembly will result.

EGR valve – To remove and fit

1. Detach the vacuum hose from the valve.
2. Unscrew the two nuts retaining the valve; collect the washers.
3. Withdraw the valve and gasket.

Note If there is insufficient clearance to withdraw the valve, it will be necessary to carry out Operations 4 to 9 inclusive.

4. Remove the windscreen wipers relay (wipers 3) and the mechanism cover.
5. Locate the top EGR valve feed pipe joint and unscrew the two securing nuts. Collect the washers, bolts, and both halves of the clamp.

   Free the joint and collect the sealing ring.
6. Remove the throttle linkage pivot.
7. Detach the hose and pipe connected to the vacuum connections on the induction manifold. This will allow access to the two setscrews securing the EGR pipe to the induction manifold.
8. Unscrew the two setscrews securing the EGR pipe to the induction manifold and free the joint.
9. Move the assembly forward to allow the EGR valve to be withdrawn.
10. To fit the EGR valve, reverse the dismantling procedure, ensuring that all gaskets are in good

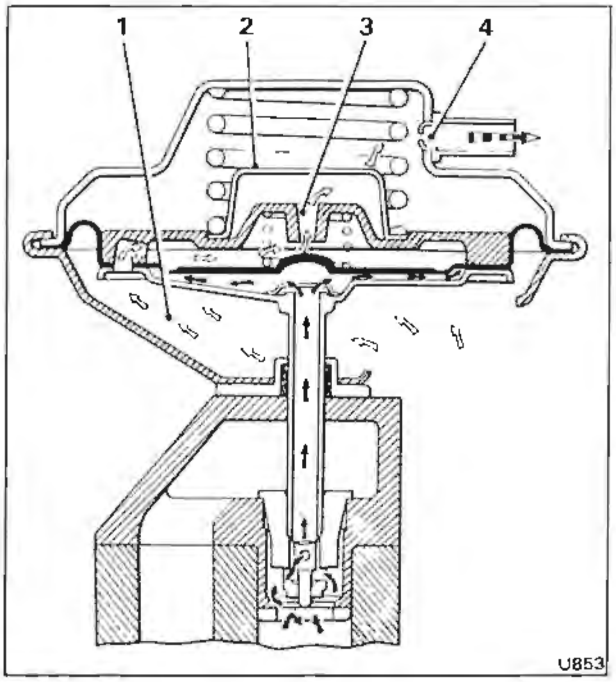

Fig. F3-2 Exhaust gas recirculation valve (exhaust pressure below operating value)

1 Ambient air
2 Air filter
3 Air bleed
4 Restrictor
Ambient air ⇦
Exhaust gas ⬅

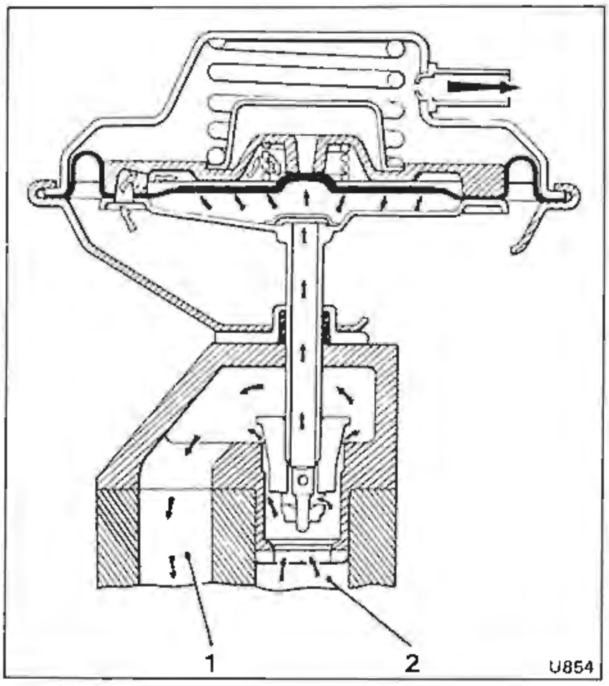

Fig. F3-3 Exhaust gas recirculation valve (exhaust pressure above operating value)

1 Exhaust gas to induction manifold
2 Exhaust gas from exhaust manifold
Ambient air ⇦
Exhaust gas ⬅

condition and that the sealing ring in the top feed pipe joint is clean.

EGR valve feed pipe – To remove and fit
(see fig. F3-1)
The main feed pipe connects the EGR valve assembly to the 'B' bank exhaust pipe.

1. To free one end of the flared pipe, unscrew the two securing nuts, collect the washers, bolts, and both halves of the split clamp.
2. When the joint is freed, remove the sealing ring located inside both adjoining pipes.
3. Repeat Operations 1 and 2 to free the joint at the opposite end of the pipe.
4. To connect the pipe reverse the dismantling procedure. Always ensure that the sealing ring, pipe flares, and split clamp mating faces are thoroughly clean and free from scale. If necessary the mating faces may be lightly dressed with fine emery cloth.

EGR components – To clean
Whenever components are removed for cleaning the following guidelines should be adhered to.

1. Use a scraper to clean the worst of the carbon deposit from the valve, joint flanges, and feed pipes.
2. Remove the remaining carbon using a wire brush fitted into a portable drill. Take care not to damage the valve seating area.
3. Thoroughly 'blow out' all components with dry compressed air before they are fitted to the engine.

EGR valve – To check
Checks to ensure the correct operation of the valve are only required under no load conditions as follows.

1. Ensure that there is no exhaust tailpipe restriction or extraction.
2. Ensure that the ACU is switched off.
3. Start and run the engine until normal operating temperature is attained (approximately 15 minutes after the thermostat has opened).
4. Raise the engine speed slowly and observe the movement of the EGR valve diaphragm. The throttle control must be opened slowly to avoid a false reading.
5. Note the speed at which the diaphragm starts to move, indicating that the valve is opening. This should be between 1250 rev/min and 1750 rev/min.

The speed at which the valve commences to move and then continues to move until open, is considered the EGR valve opening speed. Any slight fluttering of the diaphragm prior to the valve opening should be discounted.

Figure F3-4

Exhaust gas recirculation system – fault diagnosis chart

Printed in England

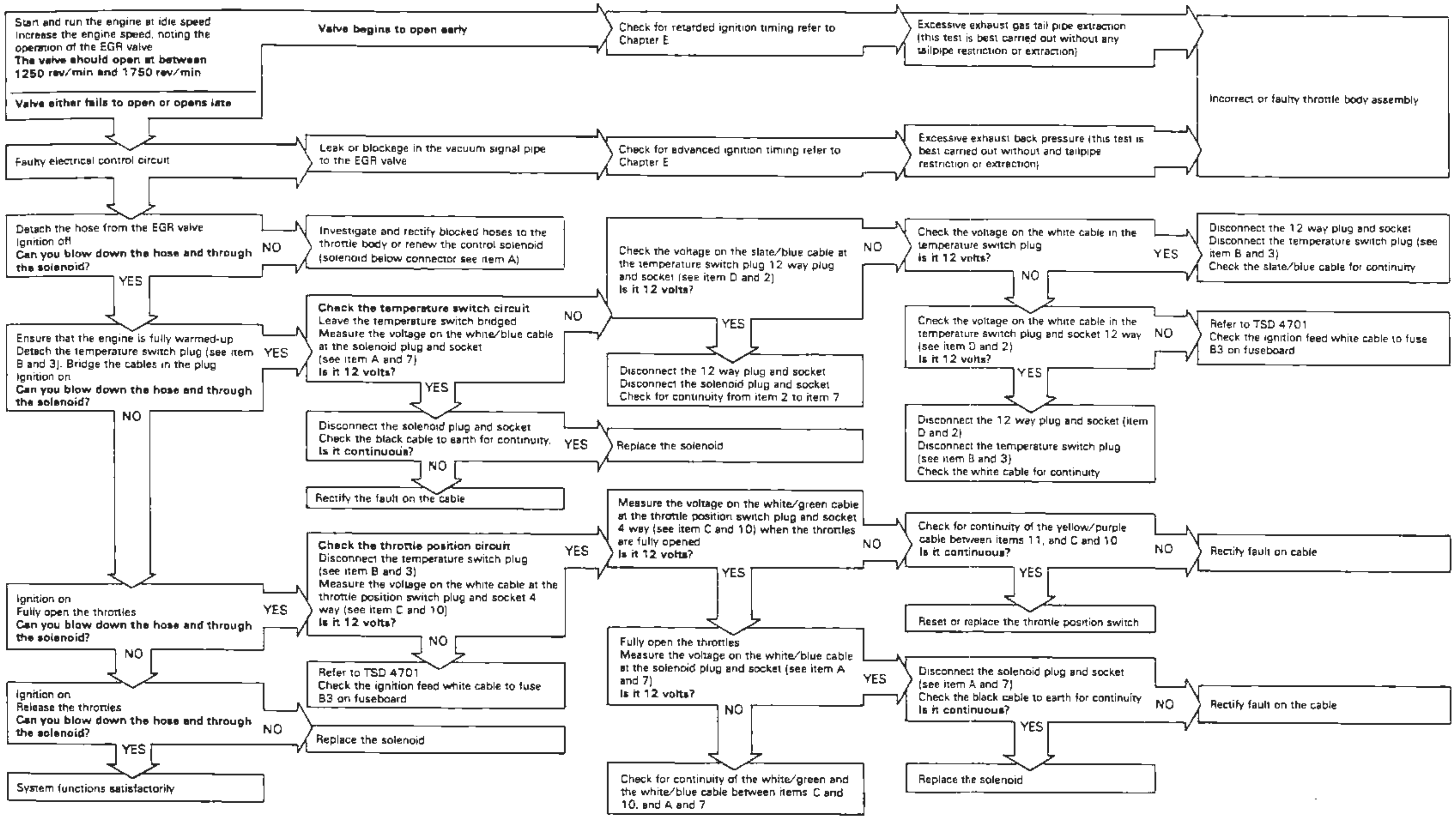

Start and run the engine at idle speed
Increase the engine speed, noting the operation of the EGR valve
The valve should open at between 1250 rev/min and 1750 rev/min

Valve begins to open early

Valve either fails to open or opens late

Faulty electrical control circuit

Detach the hose from the EGR valve
Ignition off
Can you blow down the hose and through the solenoid?

Ensure that the engine is fully warmed-up
Detach the temperature switch plug (see item B and 3). Bridge the cables in the plug
Ignition on
Can you blow down the hose and through the solenoid?

Ignition on
Fully open the throttles
Can you blow down the hose and through the solenoid?

Ignition on
Release the throttles
Can you blow down the hose and through the solenoid?

System functions satisfactorily

Leak or blockage in the vacuum signal pipe to the EGR valve

Investigate and rectify blocked hoses to the throttle body or renew the control solenoid (solenoid below connector see item A)

Check the temperature switch circuit
Leave the temperature switch bridged
Measure the voltage on the white/blue cable at the solenoid plug and socket
(see item A and 7)
Is it 12 volts?

Disconnect the solenoid plug and socket
Check the black cable to earth for continuity.
Is it continuous?

Rectify the fault on the cable

Check the throttle position circuit
Disconnect the temperature switch plug
(see item B and 3)
Measure the voltage on the white cable at the throttle position switch plug and socket 4 way (see item C and 10)
Is it 12 volts?

Refer to TSD 4701
Check the ignition feed white cable to fuse B3 on fuseboard

Replace the solenoid

Check for retarded ignition timing refer to Chapter E

Check for advanced ignition timing refer to Chapter E

Check the voltage on the slate/blue cable at the temperature switch plug 12 way plug and socket (see item D and 2)
Is it 12 volts?

Disconnect the 12 way plug and socket
Disconnect the solenoid plug and socket
Check for continuity from item 2 to item 7

Replace the solenoid

Measure the voltage on the white/green cable at the throttle position switch plug and socket 4 way (see item C and 10) when the throttles are fully opened
Is it 12 volts?

Fully open the throttles
Measure the voltage on the white/blue cable at the solenoid plug and socket (see item A and 7)
Is it 12 volts?

Check for continuity of the white/green and the white/blue cable between items C and 10. and A and 7

Excessive exhaust gas tail pipe extraction (this test is best carried out without any tailpipe restriction or extraction)

Excessive exhaust back pressure (this test is best carried out without and tailpipe restriction or extraction)

Check the voltage on the white cable in the temperature switch plug
Is it 12 volts?

Check the voltage on the white cable in the temperature switch plug and socket 12 way (see item D and 2)
Is it 12 volts?

Disconnect the 12 way plug and socket (item D and 2)
Disconnect the temperature switch plug
(see item B and 3)
Check the white cable for continuity

Check for continuity of the yellow/purple cable between items 11, and C and 10
Is it continuous?

Reset or replace the throttle position switch

Disconnect the solenoid plug and socket
(see item A and 7)
Check the black cable to earth for continuity
Is it continuous?

Replace the solenoid

Incorrect or faulty throttle body assembly

Disconnect the 12 way plug and socket
Disconnect the temperature switch plug (see item B and 3)
Check the slate/blue cable for continuity

Refer to TSD 4701
Check the ignition feed white cable to fuse B3 on fuseboard

Rectify fault on cable

Rectify fault on the cable

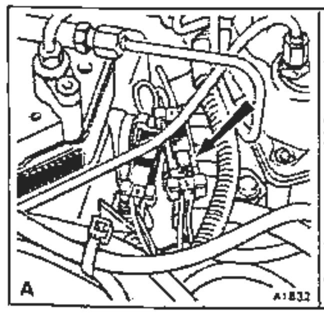
A

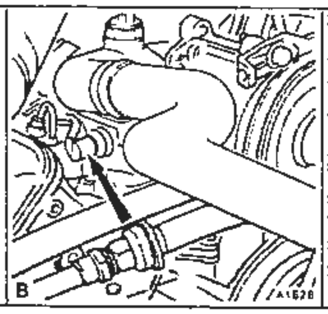
B

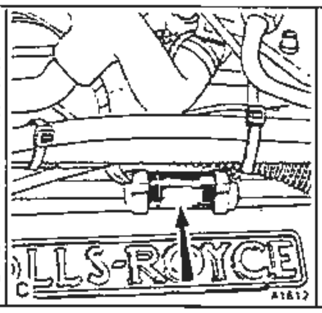
C

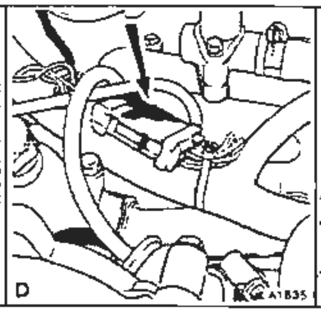
D

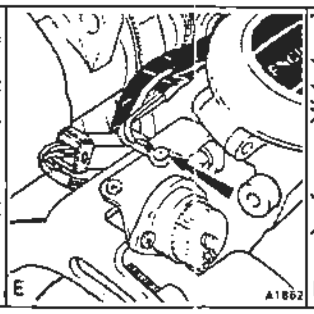
E

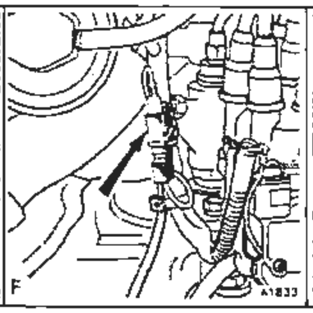
F

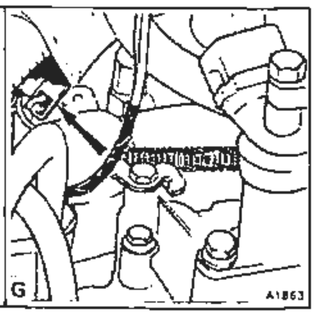
G

Diodes to test

Temperature switch circuit diode (see item F and 5)

1 Disconnect the temperature switch plug (see item B and 2)
2 Fully open the throttles
3 Measure the voltage on the slate/blue cable in the plug This should be zero

Throttle position switch circuit diode (see item G and 6)

1 Disconnect the temperature switch plug (see item B and 2)
2 Bridge the cables in the plug
3 Measure the voltage on the yellow/purple cable in the throttle position switch plug and socket 4 way. This should be zero

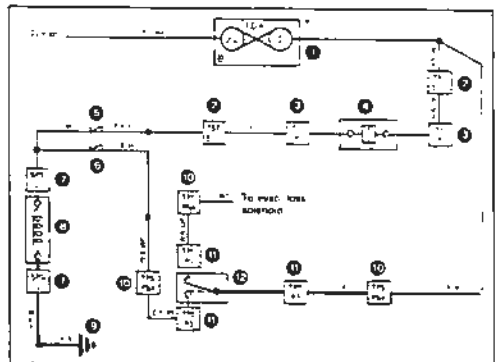

Key
1 Fuse
2 Temperature switch plug and socket (12 way)
3 Temperature switch plug
4 Temperature switch
5 Diode – temperature switch circuit
6 Diode – throttle position switch circuit
7 Solenoid valve plug and socket (2 way)
8 Solenoid valve
9 Engine earth point
10 Throttle position switch plug and socket (4 way)
11 Throttle position switch plug
12 Throttle position switch
● Splice

Important
Before carrying out a test ensure that the following conditions apply
1. The battery is fully charged
2. The engine is fully warmed-up
3. Use a multimeter to carry out the electrical circuit tests
4. The engine is switched off when either disconnecting or connecting electrical connections
5. Always remake any connection immediately a test is complete
6. Ensure that fuse B3 on fuseboard 1 is intact
7. Ensure that the test is carried out in a well ventilated area (preferably outside) and without any exhaust extraction or restriction

Air injection system

The air injection system (see fig. F4-1) consists of a belt driven air pump that delivers air via an air switching valve to the exhaust ports, during engine warm-up. This air combines with the exhaust from the combustion chambers, to promote oxidation of the gases and faster warm-up of the catalytic converter.

When the coolant temperature is above 33°C (91°F) the air switching valve vents the output of the air pump into the engine air intake.

For details of the servicing and maintenance requirements of the air injection system refer to the Service Schedules Manual TSD 4702.

Air injection pump
The rotary vane pump is mounted at the front of the engine; and belt driven from the refrigeration compressor pulley. Air is drawn into the pump, through a centrifugal filter and exits from a connection on the rear of the pump.

Air switching valve (see fig. F4-2)
The air switching valve comprises a vacuum operated valve with integral control solenoid.

When the coolant temperature is below 33°C (91°F) the solenoid is energized thus applying inlet manifold vacuum to the diaphragm chamber. This causes the injected air to be re-routed to the exhaust manifolds.

When the solenoid is de-energized [at a coolant temperature above 33°C (91°F)] the manifold vacuum signal is inhibited and the diaphragm chamber vented to atmosphere. This causes the internal spring to return the valve to the rest position, routing the injection air to the engine air intake system.

Pressure relief valve
A pressure relief valve is fitted between the air injection pump and the air switching valve. It consists of a spring loaded disc that opens at a set pressure. This prevents excessive pressure build-up, that could damage the pump vanes under extreme conditions.

Check valves
A check valve is fitted into the air injection pipe to each exhaust manifold.

Each valve assembly consists of a spring and one-way disc. The assembly prevents the flow of exhaust gases back to the air switching valve if either the exhaust back pressure exceeds the pump delivery pressure, or the pump belt fails.

Air pump drive belt
Before commencing to adjust the drive belt inspect it for signs of wear or cracking. If the belt is found unsatisfactory it should be renewed.

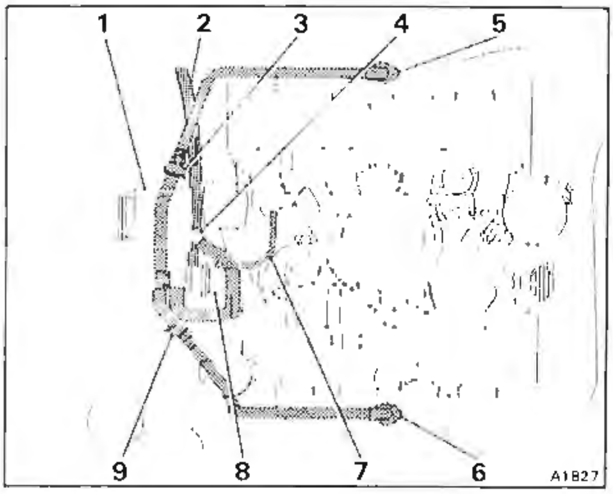

Fig. F4-1 Air injection system
1 Air pump
2 Vent hose to air cleaner
3 'A' bank check valve
4 Relief valve
5 'A' bank exhaust manifold connection
6 'B' bank exhaust manifold connection
7 Vacuum hose
8 Air switching valve
9 'B' bank check valve

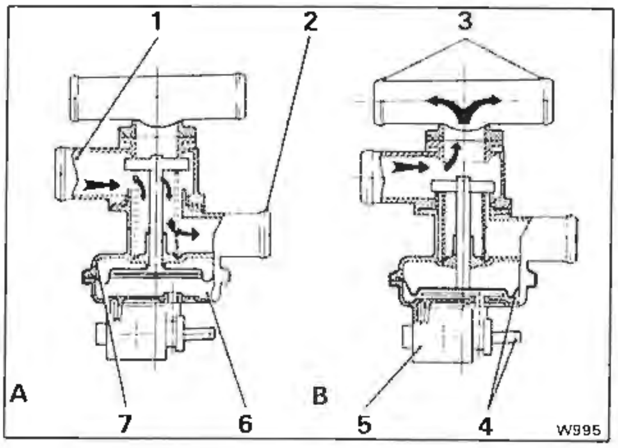

Fig. F4-2 Air switching valve
1 Inlet
2 Outlet to engine air intake
3 Outlets to exhaust ports
4 Inlet manifold vacuum
5 Solenoid valve
6 Diaphragm chamber
7 Atmospheric air bleed
A Solenoid de-energized
B Solenoid energized

The belt tension must be checked at a point midway between two pulleys (see fig. F4-3) by use of a belt tension meter.

Belt dressing must not be applied to prevent belt slip.

Refrigeration compressor to air pump
Load may be applied on either side of the belt run.

New belt and retensioning load
Belt tension meter 24,9 kgf to 29,4 kgf
(55 lbf to 65 lbf)

1. The tension of the belt is adjusted by altering the position of the air pump.
2. Slacken the pivot setscrews located at the front of the air pump. Also slacken the tensioner nut on the threaded adjustment arm.
3. Adjust the tensioner nut until the belt tension is correct.
4. Tighten both pivot setscrews.
5. Check that the belt tension is still correct when the air pump is fully secured.

Air pump – To remove and fit
1. Slacken the worm drive clip securing the hose to the pump outlet.
2. Release the belt tension (see Air pump drive belt).
3. Unscrew and remove the pivot setscrews (see fig. F4-3).
4. Fit the air pump by reversing the removal procedure, ensuring that the belt tension is correctly set.

Checking the air injection system for leaks and correct operation
To check that the system is functioning correctly, refer to the flow chart (see fig. F4-4).

If an air leak is suspected, proceed as follows.

1. Disconnect the vent hose to the air cleaner (see item A on the flow chart).
2. Start and run the engine.
3. Listen carefully for any evidence of an air leak from the system. When the coolant temperature increases to approximately 33°C (91°F) the air will be switched from the exhaust manifolds towards the air cleaner. This change can be detected by the noise the air will make as it leaves the open connection of the air switching valve.
4. If an air leak is suspected coat the suspect component with a soap solution; soap bubbles will confirm an air leak.
5. Fit the disconnected hose to the air cleaner.

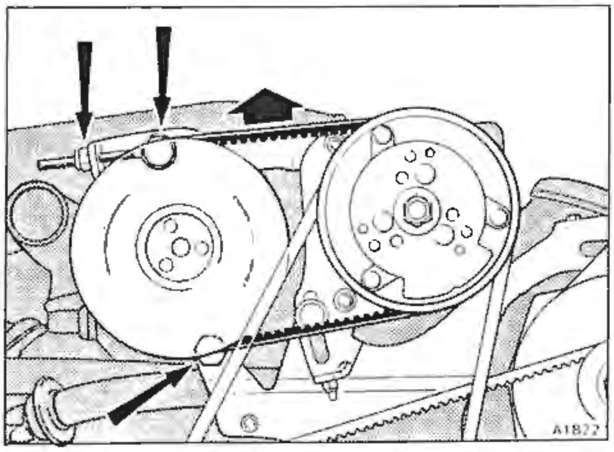

Fig. F4-3 **Air pump drive belt adjustment and tension check point**

Figure F4-4

Air injection system – fault diagnosis chart

Printed in England

1. Disconnect the air injection vent hose at the air cleaner (see item A)
   Switch on the ignition
2. Disconnect the plug from the front temperature switch in the thermostat housing. Bridge the white and slate/blue cables in the plug
   Start the engine, ensure that it is running on all eight cylinders
   Is air flowing through the vent hose (see item A)?

YES

Check the air switching valve vacuum hose and connections for air leaks (see item B)
Are there any leaks?

YES

Rectify the leaks

NO

NO

Stop the engine otherwise damage to the catalytic converter may result
Check the electrical wiring circuit as follows

Stop the engine, unbridge the temperature switch in the thermostat housing
Connect the plug to the switch
Start and run the engine until it is fully warmed-up. Allow the engine to run at the idle speed setting
Is air flowing through the vent hose (see item A)?

NO

YES

Locate the link loom 2 way plug and socket (see item D and 5)
Measure the voltage on the slate/blue cable in the plug
Is it 12 volts?

NO

Locate the thermostat loom plug and socket 12 way (see item E and 2)
Check the voltage on the slate/blue cable
Is it 12 volts?

NO

Check the voltage on the white cable at the plug and socket 12 way
Is it 12 volts?

NO

Refer to TSD 4701
Check the ignition feed white cable to fuse B3 on fuseboard 1

YES

Detach the plug from the front temperature switch in the thermostat housing (see item C and 3). Bridge the cables in the plug.
Again, check the voltage on the slate/blue cable at the 12 way plug and socket
Is it 12 volts?

NO

Leave the plug to the temperature switch bridged.
Disconnect the 12 way plug and socket
At the 12 way plug and socket check for continuity of the slate/blue cable and the white cable through the temperature switch plug

YES

Replace the temperature switch

YES

Check for continuity of the slate/blue cable between the thermostat loom plug (see item E and 2) and the link loom plug
(see item D and 5)

YES

Disconnect the link loom plug and socket
Check for continuity of the black cable
(see item 8)

NO

Rectify the fault on the black earth cable

YES

Remove the air pump, hoses to the air switching valve, and the setscrew securing the valve in position. Turn the valve to gain access to the electrical plug.
Release the plastic clip and withdraw the plug. Note in which direction the plug is fitted to the valve. Bridge the plug (see item H and 6). Detach the link loom 2 way plug and socket (see item D and 5).
Check the link loom for continuity
Is it continuous?

YES

Renew the air switching valve

NO

Rectify the fault on the link loom cables

Remove the hose from the air pump outlet and securely blank the outlet pipe
(see item F)
Start the engine
Does the air pump relief valve open allowing air to flow to atmosphere?

NO

Replace faulty relief valve

YES

Stop the engine
Remove the hose from 'A' bank check valve
(see item G)
Start the engine
Is there a flow of exhaust gas from either of the following?
1. 'A' bank check valve or
2. The disconnected hose (it is still connected to 'B' bank check valve)

YES

Replace the appropriate check valve

NO

System functions satisfactorily

Key

1	Fuse
2	Temperature switch plug and socket (12 way)
3	Temperature switch plug
4	Temperature switch
5	Air switching valve link loom plug and socket (2 way)
6	Air switching valve plug
7	Air switching valve
8	Engine earth point
●	Splice

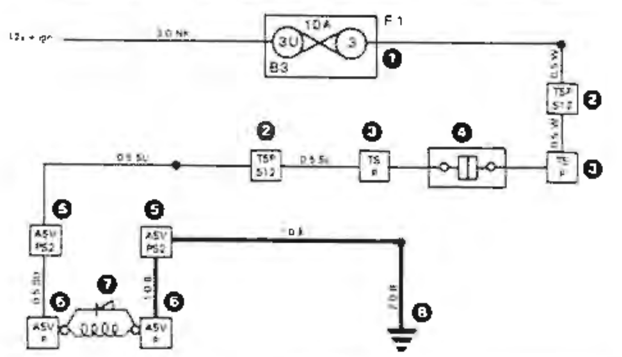

Important
Before carrying out a test ensure that the following condition apply
1 The battery is fully charged
2 The engine is cold
3 Use a multimeter to carry out the tests
4 The ignition is switched off when either disconnecting or connecting electrical connections
5 Always remake any connection immediately a test is complete
6 Ensure that the fuse B3 on fuseboard 1 is intact

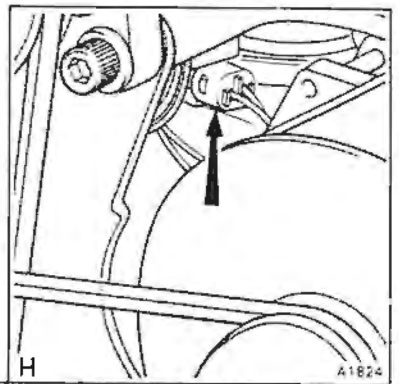
H

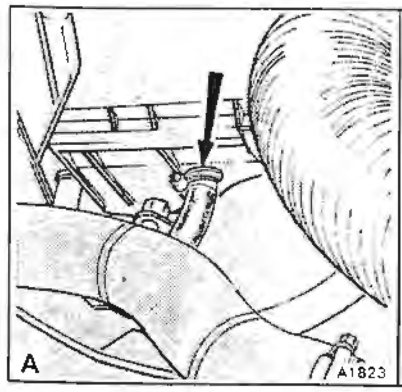
A

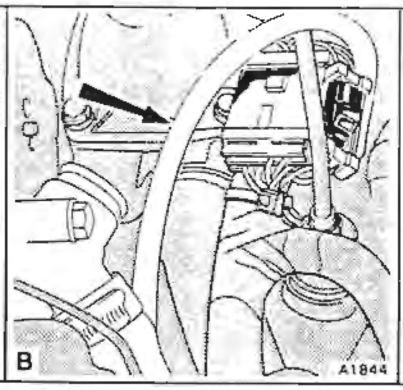
B

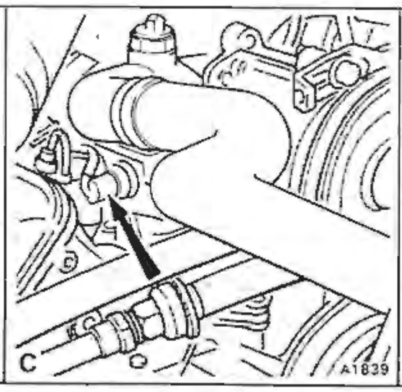
C

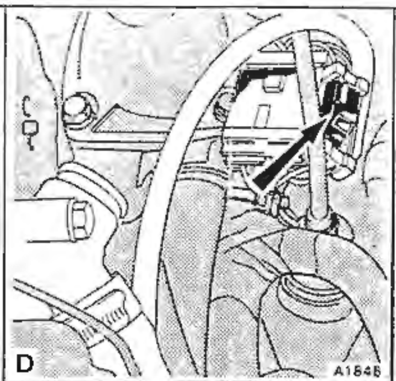
D

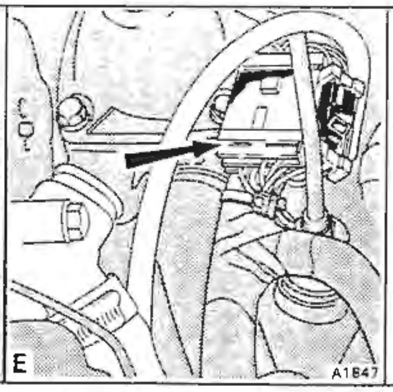
E

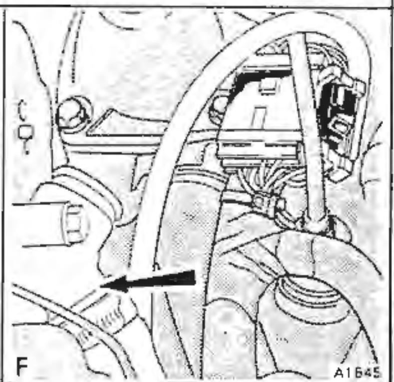
F

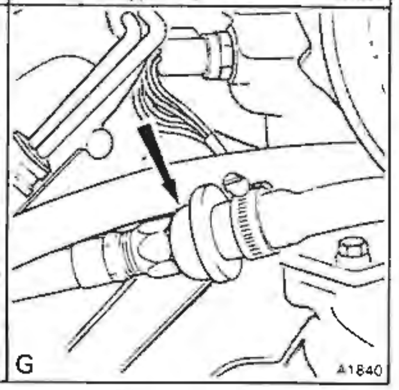
G

Three-way catalyst system

The exhaust system is basically of dual pipe construction that utilizes a single catalytic converter in place of a conventional front silencer.

The dual exhaust pipes from the engine combine into a single pipe just prior to the catalytic converter. From the converter, the system reverts to a twin pipe system with both pipes entering a common rear silencer. A single tailpipe then conveys the exhaust to atmosphere.

Catalytic converter protection
To protect the catalytic converter from possible damage the following precautions should be taken.

Unleaded gasolene
Use unleaded gasolene only 87AKI (91 RON)* Min. The use of leaded gasolene will result in a substantial reduction in the performance of the catalyst.

Under no circumstances add fuel system cleaning agents to the fuel tank for induction into the engine, as these materials may have a detrimental effect on the catalytic converter.

*AKI = Anti-knock index
RON= Research octane number

Engine malfunction
If the engine misfires or suffers from a lack of power that could be attributed to a malfunction in either the ignition system or fuel system, operation of the vehicle should be discontinued. Driving the vehicle with a malfunction could cause overheating and consequent damage to the catalytic converter.

Fuel
Do not allow the vehicle to run out of fuel. A warning lamp situated on the facia illuminates to warn the driver of a low fuel level in the fuel tank. If the vehicle runs out of fuel at high speed, possible damage to the catalytic converter could result.

Starting the engine
The vehicle must not be pushed or towed to start the engine. Failure to observe this warning could cause overheating and consequent damage to the catalytic converter.

Exhaust emission control system
It is important that the vehicle is maintained in its correct operating condition. Failure to do so will result not only in loss of fuel economy and emission control but could also cause damage to the catalytic converter due to overheating.

Catalytic converter – To remove and fit (see fig. F5-2)

1. Remove the screws retaining the grass-fire shield(s) located below the catalytic converter.

Note Take care when removing the shield(s) as any sharp edges could cause injury to the operator's hands.

2. Ensure that the weight of the catalytic converter is temporarily supported.
3. Support the weight of the downtake pipes.
4. Unscrew and remove the oxygen sensor.
5. Unscrew the nuts from the exhaust clamps forward and rearward of the catalytic converter.

Collect the washers and bolts, then free the clamps.

6. Discard the temporary support and withdraw the catalytic converter.
7. Collect the sealing rings from the joints as the converter is removed.
8. Fit the catalytic converter by reversing the removal procedure, noting the following points.
9. The sealing rings and pipe flares must be

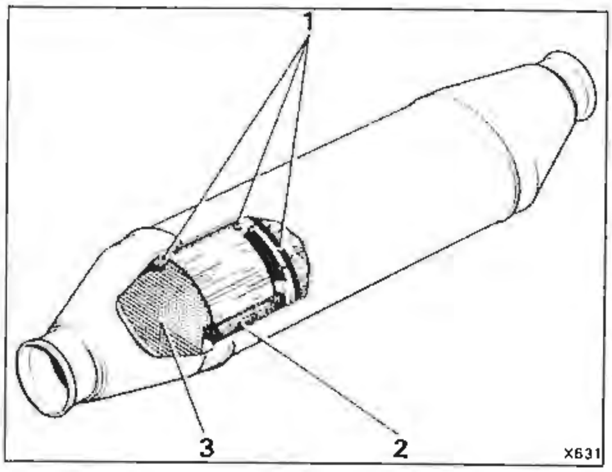

Fig. F5-1 Catalytic converter
1 Stainless steel mesh retaining rings
2 Stainless steel mesh
3 Monolithic catalyst (1 of 3 blocks)

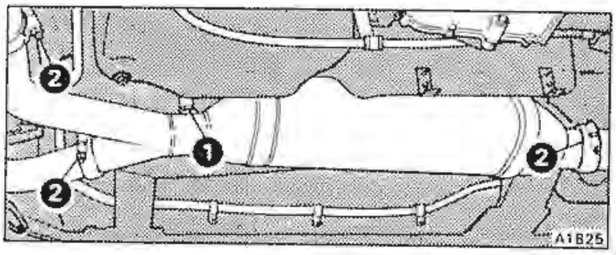

Fig. F5-2 Catalytic converter in position
1 Oxygen sensor
2 Exhaust joint clamps

Printed in England

thoroughly clean and free from scale. They may be lightly dressed with fine emery cloth if required.

10. Apply Never-seez anti-seize compound to the clamp bolt threads before assembly.

11. The sealing rings, pipe flares, and grooves in the spherical joint clamp brackets should be lightly smeared with either graphite lubricant or Never-seez compound. This will assist alignment of the parts upon assembly.

12. The parts should be loosely assembled and then manoeuvred to give the best alignment, before the joints are tightened.

13. Smear the threads of the oxygen sensor with Never-seez assembly compound. It is important that the Never-seez is applied only to the threads of the unit. Care must be taken to ensure that the compound does not contact the slotted shield below the threaded portion.

Torque tighten the oxygen sensor to the figures given in Chapter L.

Do not allow the assembly compound to enter the exhaust system, particularly up stream (in front) of the catalytic converter, otherwise damage to the converter assembly will result.

Oxygen sensor warning lamp

On cars conforming to Australian and North American specifications an oxygen sensor warning lamp is situated on the facia.

When permanently illuminated, the lamp informs the driver that a malfunction has occurred in the 'closed loop' mixture control system. The cause of the malfunction must then be investigated by referring to the appropriate fault diagnosis chart contained in Chapter B.

The warning lamp may illuminate when the engine is being cranked but should extinguish soon after the engine starts. **The lamp will however, remain illuminated until the oxygen sensor reaches its normal operating temperature.**

Oxygen sensor

For details relating to the oxygen sensor refer to Chapter B.

Exhaust system overheat warning lamp

On cars conforming to a Japanese specification an exhaust overheat warning system is fitted. The warning panel for this system is situated on the facia. Illumination of the panel indicates that an overheating condition caused through an engine malfunction has been reached in the exhaust system.

If an exhaust overheat condition is indicated, stop the vehicle as soon as possible and switch off the ignition. After three minutes the engine may be started again and providing the overheat warning lamp remains extinguished, the vehicle can be accelerated gently up to a speed of 30 km/h (18 mile/h). This speed must not be exceeded until the cause of the overheat warning has been corrected by referring to the appropriate fault diagnosis flow chart (see fig. F5-3).

To check that the warning panel bulb is operating satisfactorily, ensure that the panel illuminates during engine cranking (i.e. starter motor engaged).

Exhaust system

For information relating to the remainder of the exhaust system refer to TSD 4700 Chapter Q, Exhaust system.

Figure F5-3

Exhaust overheat warning system – fault diagnosis chart

Sheet 1 of 2

Printed in England

Before carrying out a full diagnostic inspection ensure that the vehicle did not run out of fuel.

If the overheat warning lamp illuminates for reasons other than the above, a fault has occurred in

a. The various systems that lead into the exhaust (fuel system, air intake, etc.) or in the exhaust itself particularly the catalytic converter.
   Any faults in these areas can be determined as **system faults**
b. The overheat warning circuit (faulty converter thermocouple, electronic control unit, wiring connections, etc.) causing the lamp to illuminate although the system is operating satisfactorily.
   These faults can be determined as **circuit faults.**

Important

Before carrying out a test ensure that the following conditions apply

1. The battery is fully charged
2. The engine is cold
3. Use a multimeter to carry out the electrical circuit tests
4. The engine is switched off when either disconnecting or connecting electrical connections
5. Always remake any connection immediately a test is complete
6. Always exercise extreme care when carrying out investigations around the exhaust and catalytic converter, as these components may be very hot.

Overheat warning

If an overheat condition is indicated, stop the vehicle as quickly as possible in a safe and orderly manner.

Switch off the ignition.

After three minutes the engine may be started again and providing the overheat warning lamp remains extinguished, the vehicle may be accelerated gently up to a speed of 30 km/h (18 miles/h).

This speed must not be exceeded until the cause of the overheat warning has been corrected.

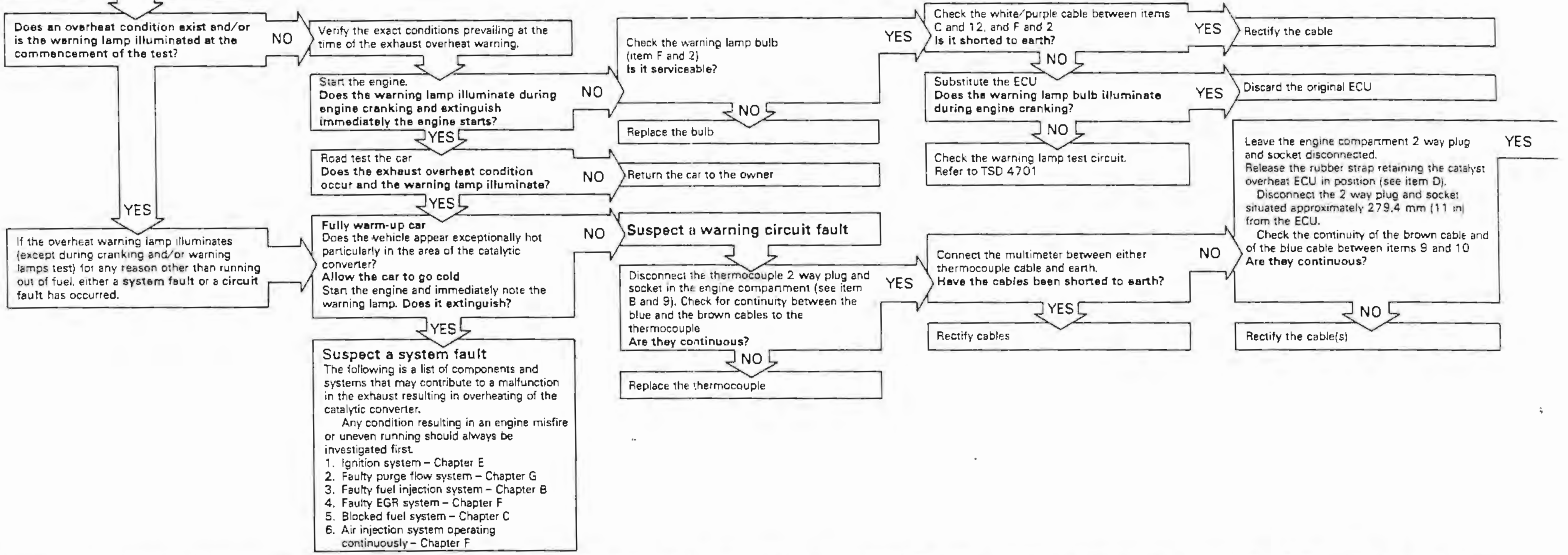

Does an overheat condition exist and/or is the warning lamp illuminated at the commencement of the test?

NO

YES

If the overheat warning lamp illuminates (except during cranking and/or warning lamps test) for any reason other than running out of fuel, either a **system fault** or a **circuit fault** has occurred.

Verify the exact conditions prevailing at the time of the exhaust overheat warning.

Start the engine.
Does the warning lamp illuminate during engine cranking and extinguish immediately the engine starts?

NO

YES

Road test the car
Does the exhaust overheat condition occur and the warning lamp illuminate?

NO

YES

Fully warm-up car
Does the vehicle appear exceptionally hot particularly in the area of the catalytic converter?
Allow the car to go cold
Start the engine and immediately note the warning lamp. **Does it extinguish?**

NO

YES

Suspect a system fault

The following is a list of components and systems that may contribute to a malfunction in the exhaust resulting in overheating of the catalytic converter.

Any condition resulting in an engine misfire or uneven running should always be investigated first.

1. Ignition system – Chapter E
2. Faulty purge flow system – Chapter G
3. Faulty fuel injection system – Chapter B
4. Faulty EGR system – Chapter F
5. Blocked fuel system – Chapter C
6. Air injection system operating continuously – Chapter F

Check the warning lamp bulb (item F and 2)
Is it serviceable?

YES

NO

Replace the bulb

Return the car to the owner

Suspect a warning circuit fault

Disconnect the thermocouple 2 way plug and socket in the engine compartment (see item B and 9). Check for continuity between the blue and the brown cables to the thermocouple
Are they continuous?

YES

NO

Replace the thermocouple

Check the white/purple cable between items C and 12, and F and 2
Is it shorted to earth?

YES

NO

Substitute the ECU
Does the warning lamp bulb illuminate during engine cranking?

YES

NO

Check the warning lamp test circuit.
Refer to TSD 4701

Connect the multimeter between either thermocouple cable and earth.
Have the cables been shorted to earth?

NO

YES

Rectify cables

Rectify the cable

Discard the original ECU

Leave the engine compartment 2 way plug and socket disconnected.
Release the rubber strap retaining the catalyst overheat ECU in position (see item D).
Disconnect the 2 way plug and socket situated approximately 279.4 mm (11 in) from the ECU.
Check the continuity of the brown cable and of the blue cable between items 9 and 10
Are they continuous?

YES

NO

Rectify the cable(s)

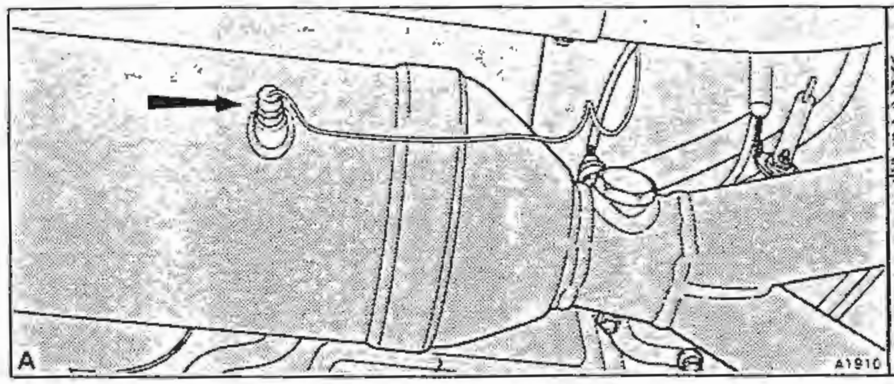
A

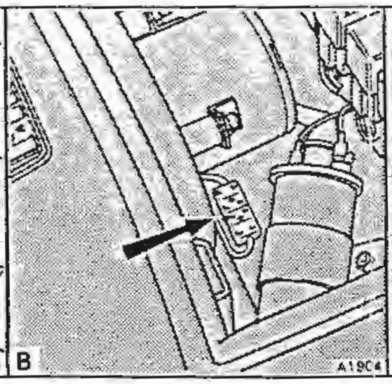
B

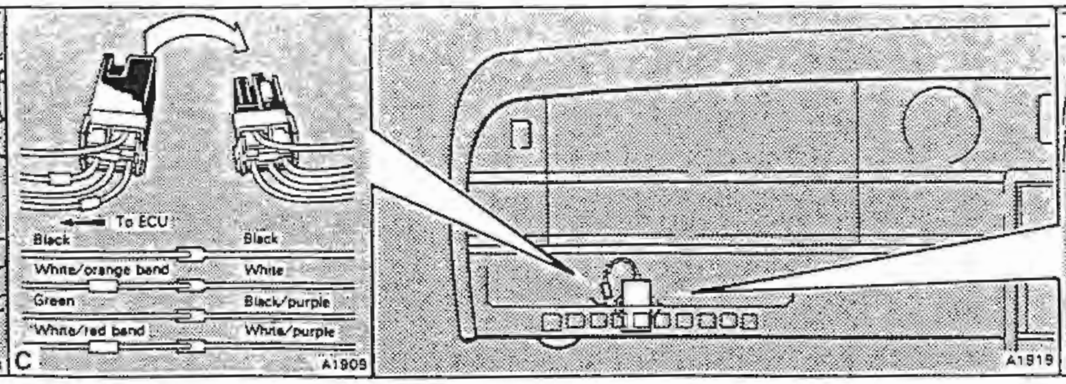
C

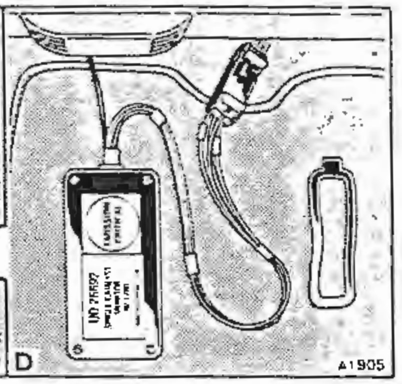
D

Figure F5-3

Exhaust overheat warning system – fault diagnosis chart

Sheet 2 of 2

Printed in England

Key

1	Diode board 10 way plug
2	Warning lamp
3	Other than Europe plug and socket
4	Engine running sensor plug and socket
5	Speedometer connection
6	Fuse
7	Right-hand 'A' post earth point
8	Thermocouple probe
9	Engine compartment plug and socket
10	Catalyst overheat warning 2 way plug and socket
11	Electrical control unit
12	Catalyst overheat warning 4 way plug and socket

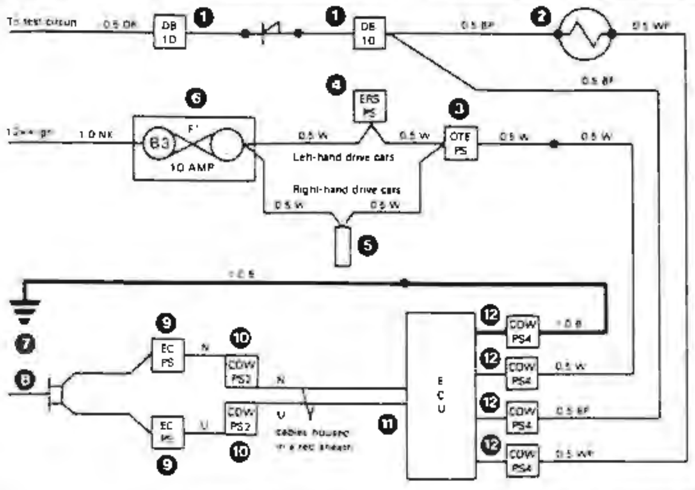

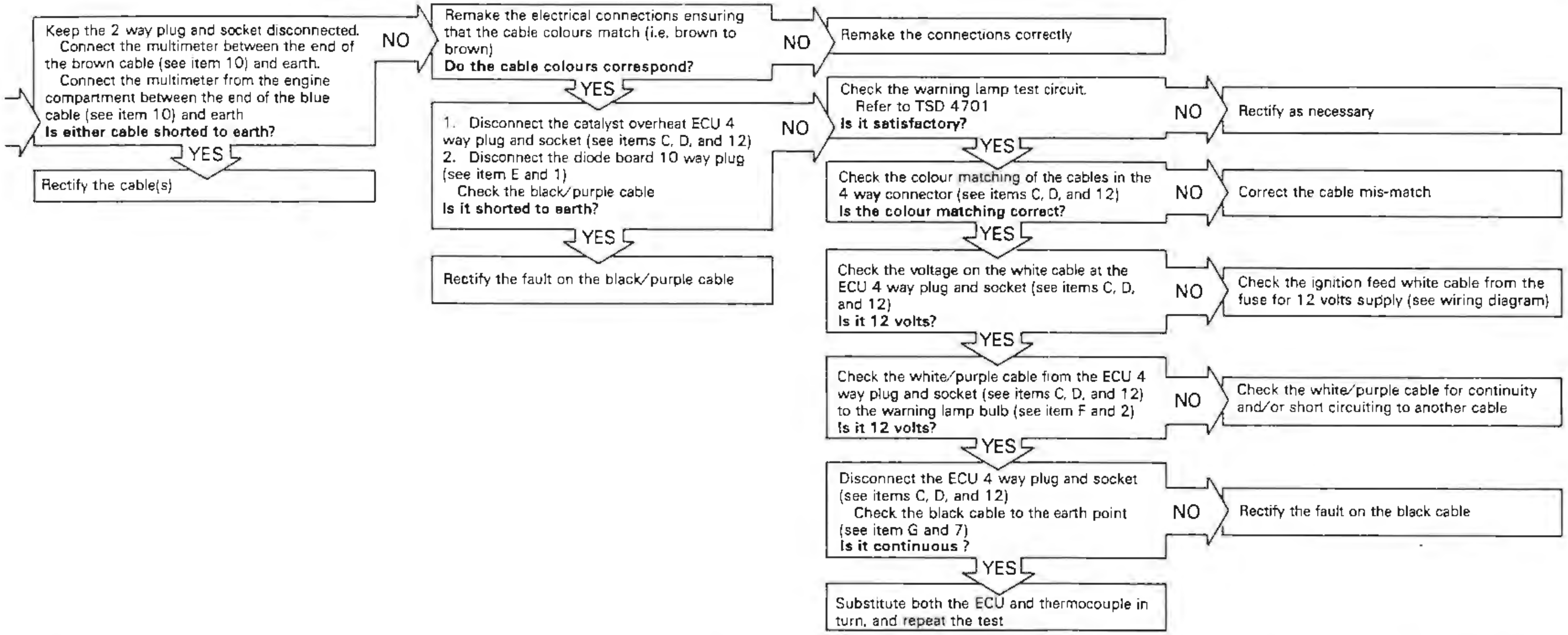

Keep the 2 way plug and socket disconnected.
Connect the multimeter between the end of the brown cable (see item 10) and earth.
Connect the multimeter from the engine compartment between the end of the blue cable (see item 10) and earth
Is either cable shorted to earth?

YES → Rectify the cable(s)

NO → Remake the electrical connections ensuring that the cable colours match (i.e. brown to brown)
Do the cable colours correspond?

NO → Remake the connections correctly

YES → 1. Disconnect the catalyst overheat ECU 4 way plug and socket (see items C, D, and 12)
2. Disconnect the diode board 10 way plug (see item E and 1)
Check the black/purple cable
Is it shorted to earth?

YES → Rectify the fault on the black/purple cable

NO → Check the warning lamp test circuit.
Refer to TSD 4701
Is it satisfactory?

NO → Rectify as necessary

YES → Check the colour matching of the cables in the 4 way connector (see items C, D, and 12)
Is the colour matching correct?

NO → Correct the cable mis-match

YES → Check the voltage on the white cable at the ECU 4 way plug and socket (see items C, D, and 12)
Is it 12 volts?

NO → Check the ignition feed white cable from the fuse for 12 volts supply (see wiring diagram)

YES → Check the white/purple cable from the ECU 4 way plug and socket (see items C, D, and 12) to the warning lamp bulb (see item F and 2)
Is it 12 volts?

NO → Check the white/purple cable for continuity and/or short circuiting to another cable

YES → Disconnect the ECU 4 way plug and socket (see items C, D, and 12)
Check the black cable to the earth point (see item G and 7)
Is it continuous ?

NO → Rectify the fault on the black cable

YES → Substitute both the ECU and thermocouple in turn, and repeat the test

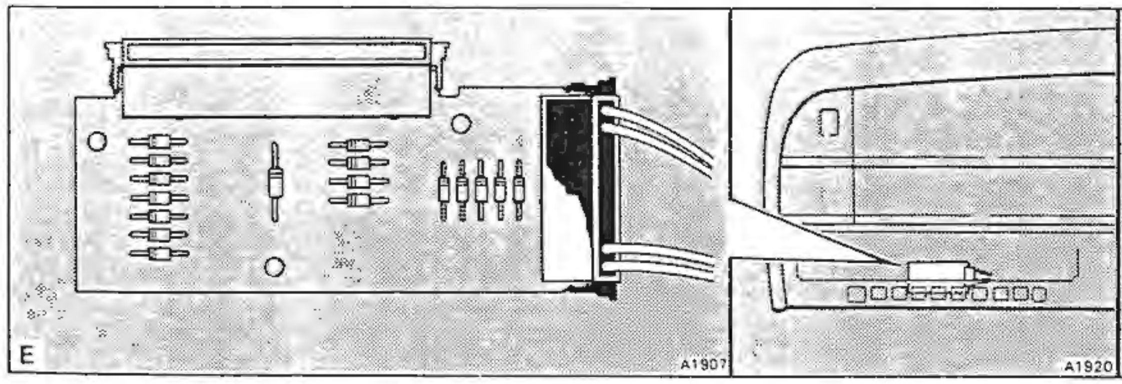
E

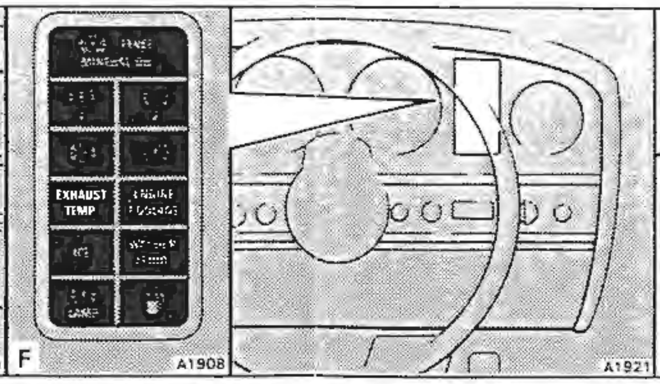
F

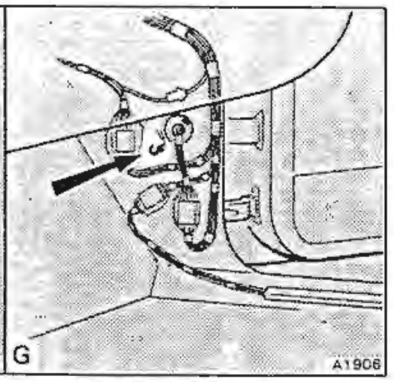
G

Introduction

The contents of Sections F6, F7, and F8 apply to 1989 model year turbocharged cars fitted with an exhaust emission control system.

The exhaust emission control system (see fig. F6-1) is designed to reduce the carbon monoxide, hydrocarbon, and oxides of nitrogen content in the exhaust gas.

To comply with exhaust emission control regulations that apply in certain countries, cars destined for these countries are fitted with a **warm-up catalytic converter** and **two main catalytic converters** mounted in parallel. The converters are of the three-way catalyst type.

In order to achieve maximum efficiency the catalytic converters require very accurate control of the engine air/fuel ratio. This is accomplished by the use of a continuous fuel injection system with 'closed loop' mixture control (refer to Chapter B).

The following additional system is also fitted to improve the control of exhaust emissions.

The **air injection system** comprises a belt driven pump, that during the warm-up period passes air via check valves to the exhaust manifolds. The injected air combines with the exhaust from the combustion chambers to promote oxidation of the gases and reduce the catalytic converter warm-up time.

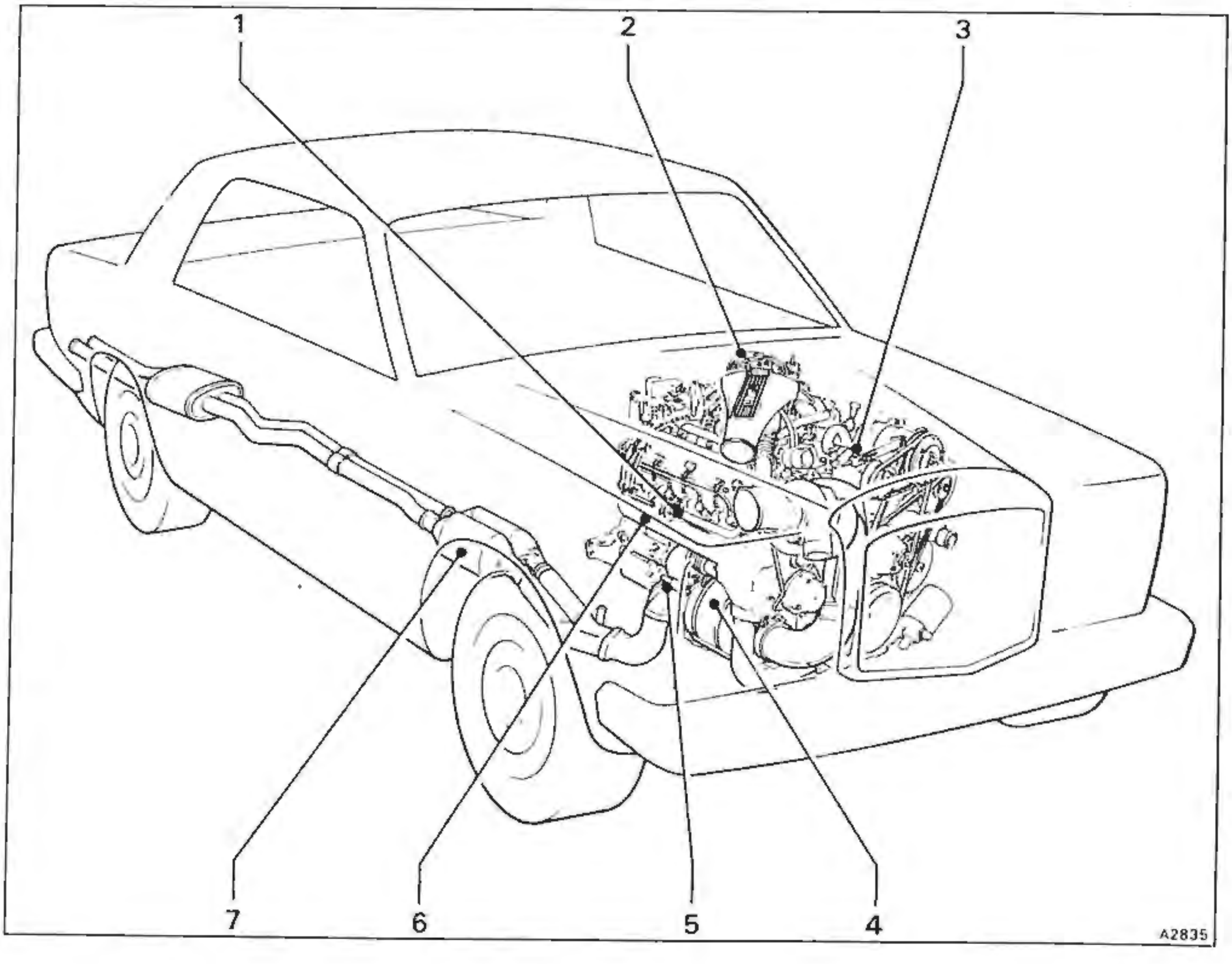

Fig. F6-1 Exhaust emission control systems
1 'A' bank air manifold
2 Air meter and fuel distributor assembly
3 Air pump
4 Warm-up catalytic converter
5 Heated oxygen sensor
6 'A' bank exhaust manifold
7 Main catalytic converters

Whenever the coolant temperature is above 33°C (91.4°F), a switch in the thermostat housing opens, thus deactivating the clutch on the air pump pulley. An overspeed limiting device also deactivates the pump clutch at engine speeds in excess of 3000 rev/min. Whenever the clutch is deactivated, the air pump is disengaged and there is no air injection.

For details of the servicing and maintenance requirements of the exhaust emission control system, refer to the Service Schedules Manual TSD 4702.

Air injection system

The air injection system comprises a belt driven air pump which delivers air via check valves to the exhaust manifolds during the warm-up phase of engine operation. This air combines with the exhaust from the combustion chambers and promotes oxidation of the gases and faster warm-up of the catalytic converters.

The air injection system only operates immediately after a cold start. It is switched off when the engine coolant temperature rises above 33°C (91.4°F) via a relay connected to the air pump clutch.

The relay is operated by a temperature switch situated in the thermostat housing and switches off

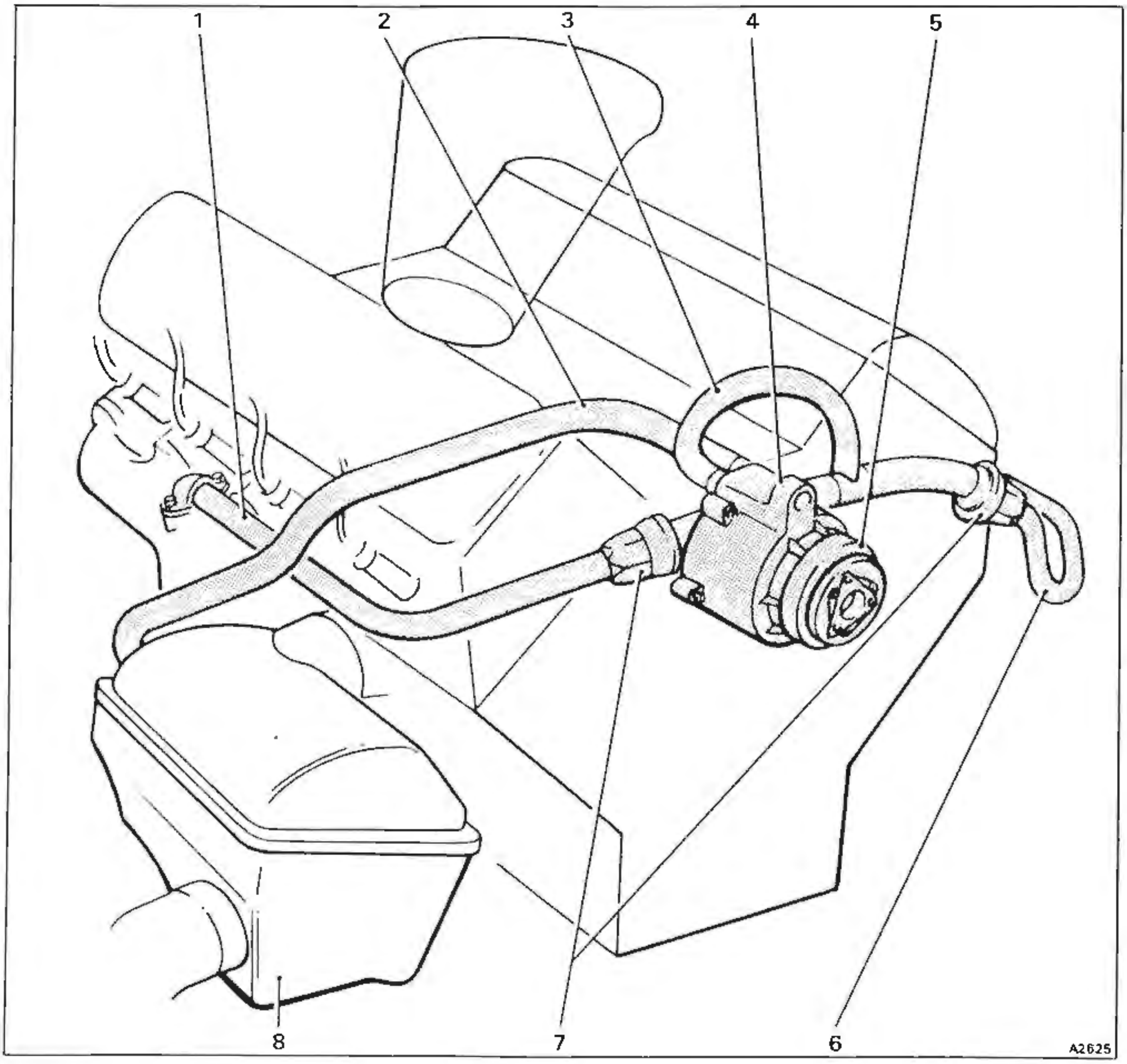

Fig. F7-1 Air injection system

1 'A' bank air injection feed pipe
2 Air pump inlet hose
3 Air pump outlet hose
4 Air pump
5 Clutch assembly
6 'B' bank air injection feed pipe
7 Check valves
8 Air filter housing

the electrical supply to the air pump clutch.

In order to protect the pump from excessive speeds, particularly after starting in low ambient temperatures, the clutch is disengaged when the engine speed exceeds 3000 rev/min. This is achieved by using a speed signal from the engine management system ECU.

The speed signal is processed in a separate control unit which outputs a signal to the air injection relay when the engine speed exceeds 3000 rev/min. The relay then cuts the electrical supply to the air pump clutch which disengages the drive to the air pump.

Air injection pump

The rotary vane pump incorporating a clutched drive, is mounted at the front of the engine and is belt driven from the air conditioning system compressor pulley. Drive is engaged when an electrical currect is applied to the clutch.

Filtered air is supplied to a port on the rear of the pump from the engine air cleaner housing. Air is

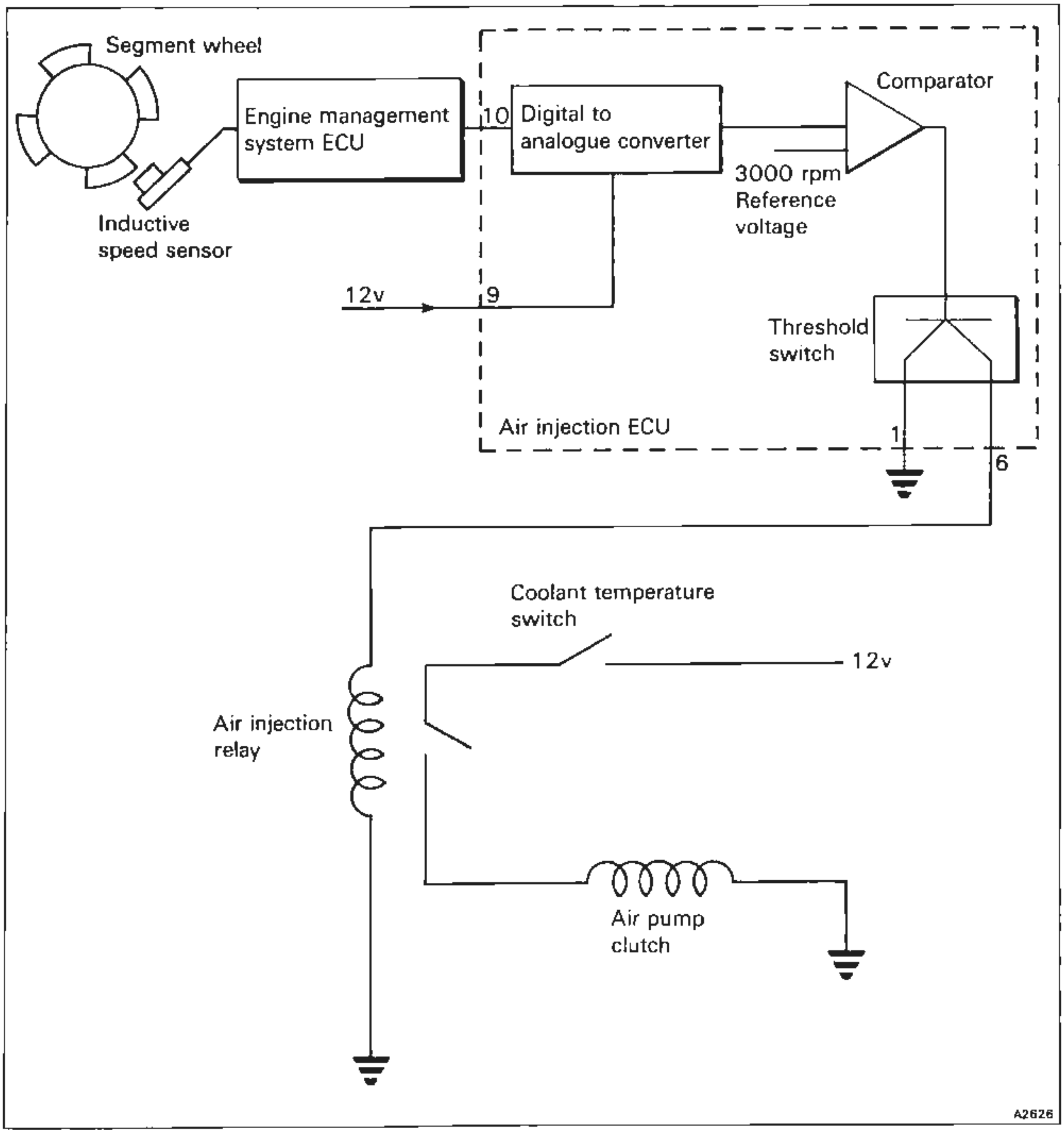

Fig. F7-2 Air pump speed limiting

pumped to the exhaust manifolds from the second port on the rear of the pump assembly.

Check valves

Check valves are located in the air injection pipes between the pump and the exhaust manifolds. Each check valve operates as a one-way disc valve to prevent the flow of exhaust gases back to the air pump.

Air pump drive belt

Before commencing to adjust the drive belt inspect it for signs of wear or cracking. If the belt is found unsatisfactory it should be renewed.

The belt tension must be checked at a point midway between the two pulleys (see fig. F7-4) by use of a belt tension meter.

Belt dressing must not be applied to prevent belt slip.

Refrigeration compressor to air pump

Load may be applied on either side of the belt run.
New belt and retensioning load.
Belt tension meter 24,9 kgf to 29,4 kgf (55 lbf to 65 lbf).

1. The tension of the belt is adjusted by altering the position of the air pump.
2. Slacken the pivot setscrews located at the front of the air pump.
3. Slacken the adjusting arm pivot nut situated on the air conditioning system compressor.
4. Slacken the tensioner nut on the threaded adjustment arm.
5. Adjust the tensioner nut until the belt tension is correct.
6. Tighten both pivot setscrews and the adjusting arm pivot nut.
7. Check that the belt tension is still correct when the air pump is fully secured.

Air pump – To remove and fit

1. Slacken the worm drive clips securing the pump inlet and outlet hoses.
2. Release the belt tension (see Air pump drive belt).
3. Unscrew and remove the pivot setscrews and the adjusting arm pivot nut.
4. Withdraw the pump.
5. Fit the air pump by reversing the removal procedure, ensuring that the belt tension is correctly set.

Checking the air injection system for leaks

1. Ensure that the engine is cold.
2. Start and run the engine.
3. Inspect the various hoses and components within the system for air leaks. If an air leak is suspected, coat the suspect component with a soapy solution; soap bubbles will confirm an air leak.
4. As the engine coolant temperature reaches 33°C (91°F) the air pump clutch will be disengaged and the air injection system deactivated.

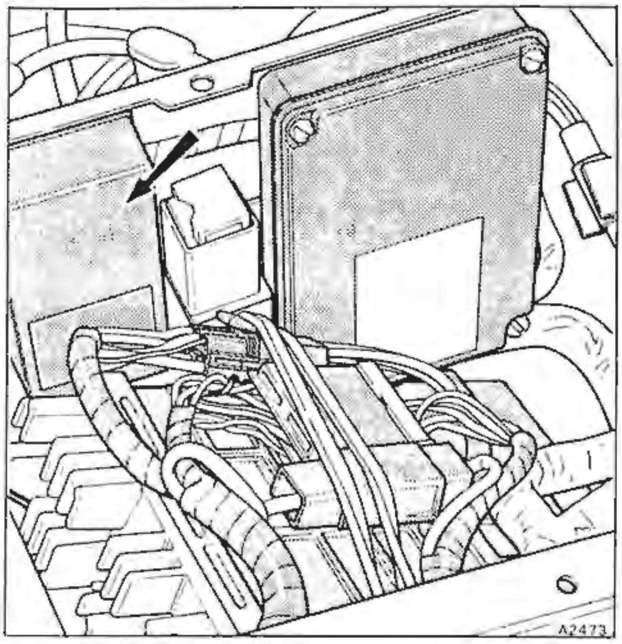

Fig. F7-3 Location of air injection system ECU

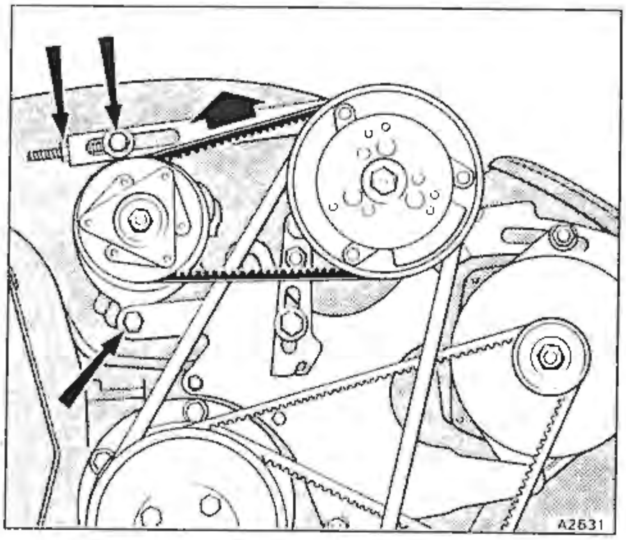

Fig. F7-4 Air pump drive belt adjustment and tension check point

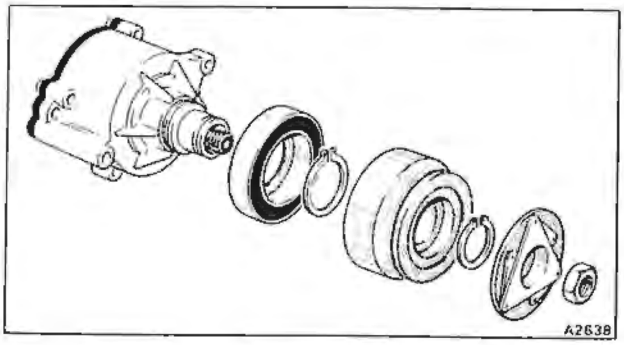

Fig. F7-5 Air pump clutched pulley

Air injection system - Functional check
Refer to figure F7-6.

Air injection clutched pulley - To remove and fit
(see fig. F7-5)

1. Slacken the drive belt tension.
2. Insert a 6 mm Allen key into the end of the pump shaft, to hold the shaft stationary.
3. Unscrew the pulley securing nut from the pump driving shaft.
4. Withdraw the friction clutch.
5. Remove the small circlip from its groove in the drive-shaft. Note that the circlip is fitted with the chamfered side pointing away from the pump body.
6. Withdraw the pulley/bearing housing from the bearing surface of the air pump drive-shaft.
7. Remove the large circlip from its groove in the drive-shaft. Note that the circlip is fitted with the chamfered side pointing away from the pump body.
8. Withdraw the electro-magnet from its locating dowel in the pump body.
9. Fit the clutched pulley by reversing the dismantling procedure.

Figure F7-6

Air injection system – fault diagnosis chart
Sheet 1 of 2

1 Fuse A4 (10 amp), fuseboard 1
2 Fuse B5 (20 amp), fuseboard 2
3 Fuse B3 (15 amp), fuseboard 1
4 Fuel pump relay
5 Thermostat plug and socket 12 way
6 Coolant temperature switch plug
7 Coolant temperature switch
8 Air injection pump clutch
9 Air injection pump plug and socket 2 way
10 Air injection relay
11 K-Motronic ECU
12 Air injection ECU
● Splice

Important
Before carrying out a test ensure that the following conditions apply
1 The battery is fully charged
2 The engine is cold
3 Use a multi-meter to carry out the tests
4 The ignition is switched off when either disconnecting or connecting electrical connections
5 Always remake any connection immediately a test is complete
6 Ensure that the fuses listed are intact

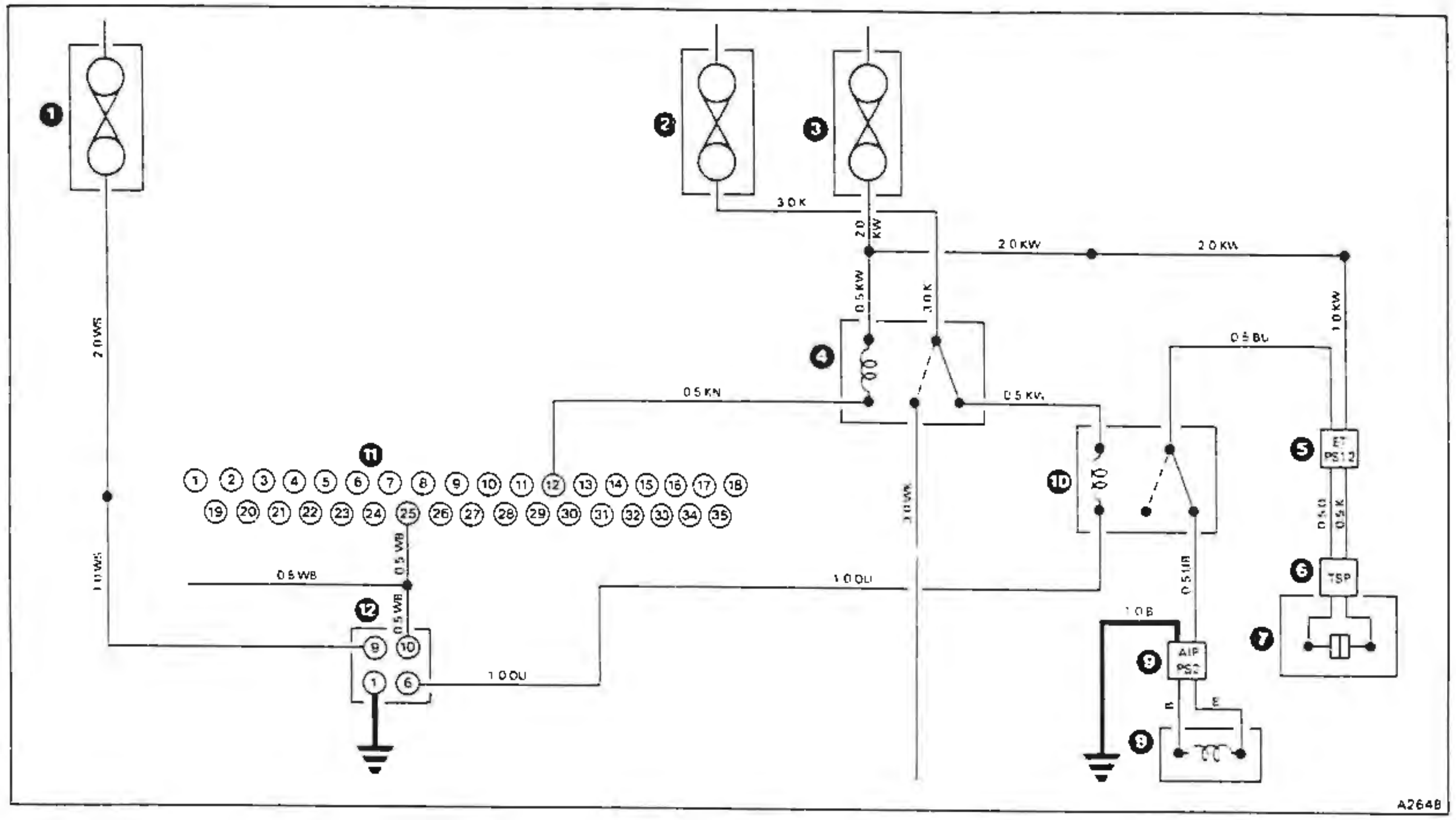

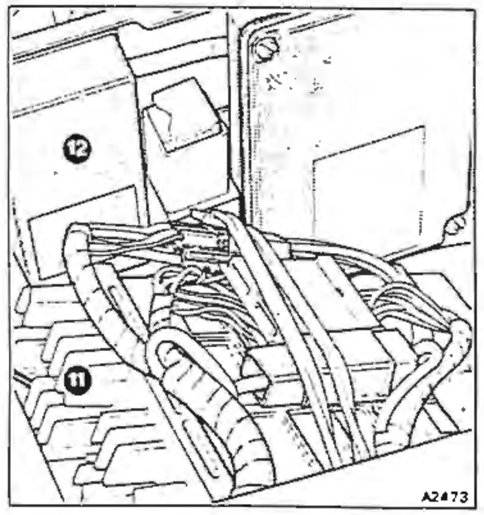

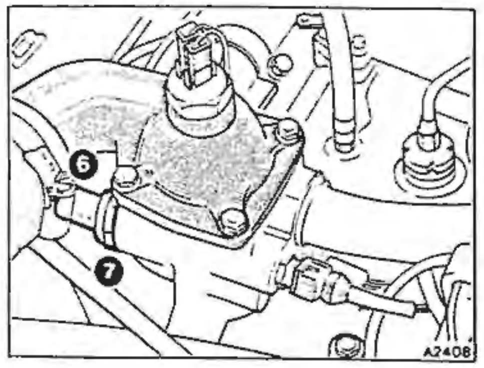

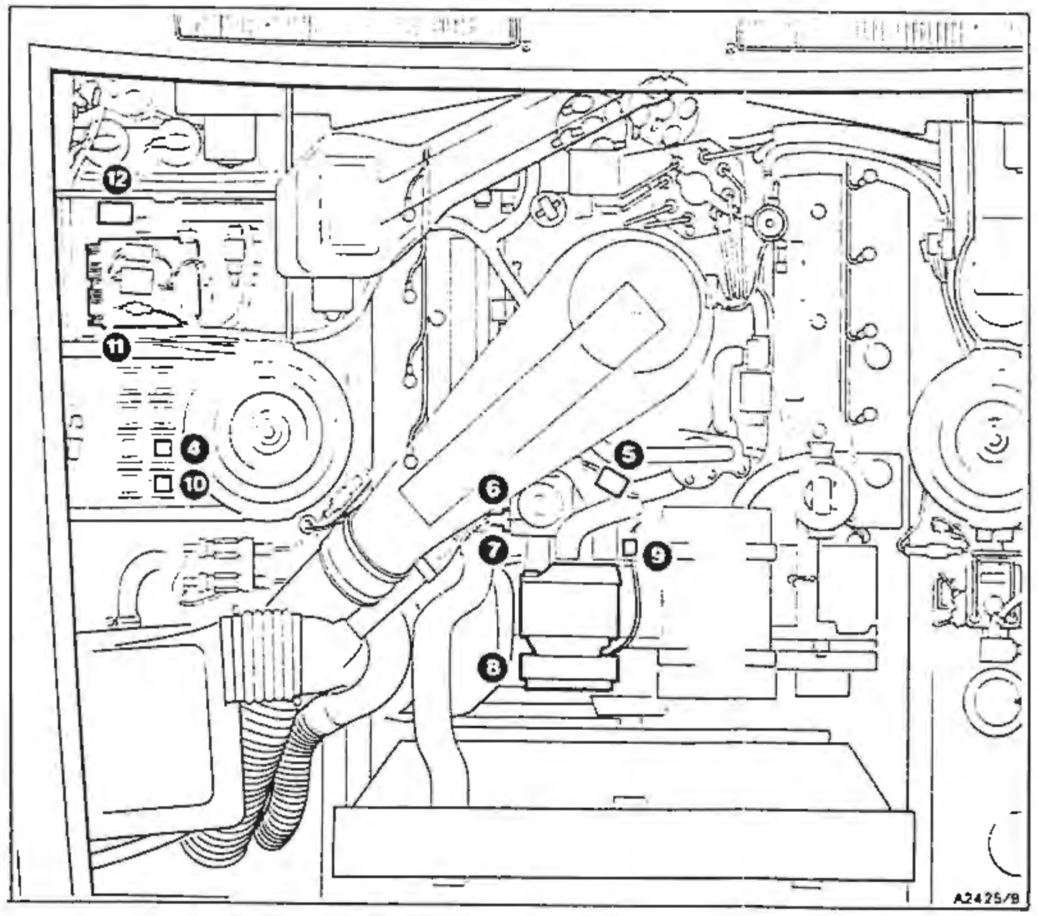

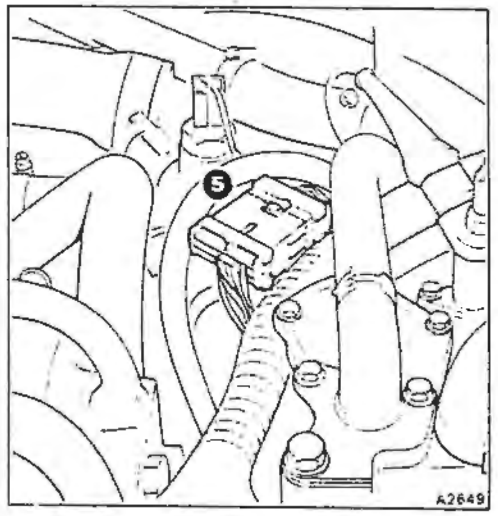

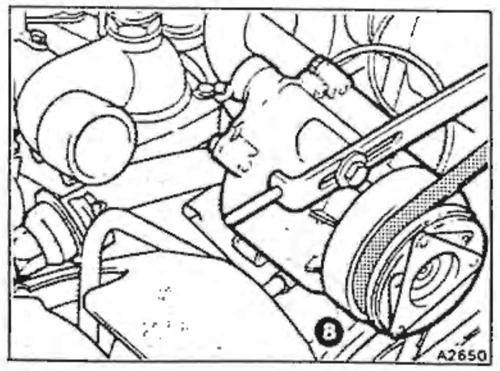

At the rear of the air pump locate the hose that supplies air to the check valves.
Detach the hose.
Start and run the engine at idle
Is air pumped from the outlet port?

NO

YES

With the engine running disconnect the air injection pump plug and socket 2 way (see item 9)
Does the clutch disengage so that no air is pumped from the outlet?

NO

YES

Stop the engine.
Connect the outlet hose to the pump.
Connect the plug and socket 2 way.
Start the engine and carry out a leak check
Is this satisfactory?

NO

YES

Increase the engine speed
Does the pump clutch deactivate whenever the engine speed exceeds approximately 3000 rev/min?

NO

YES

Reduce the engine speed to idle.
Allow the engine to warm-up
Does the pump clutch deactivate when the coolant temperature exceeds approximately 50°C (122°F)?

NO

YES

System functions satisfactorily

Figure F7-6

Air injection system – fault diagnosis chart
Sheet 2 of 2

Printed in England

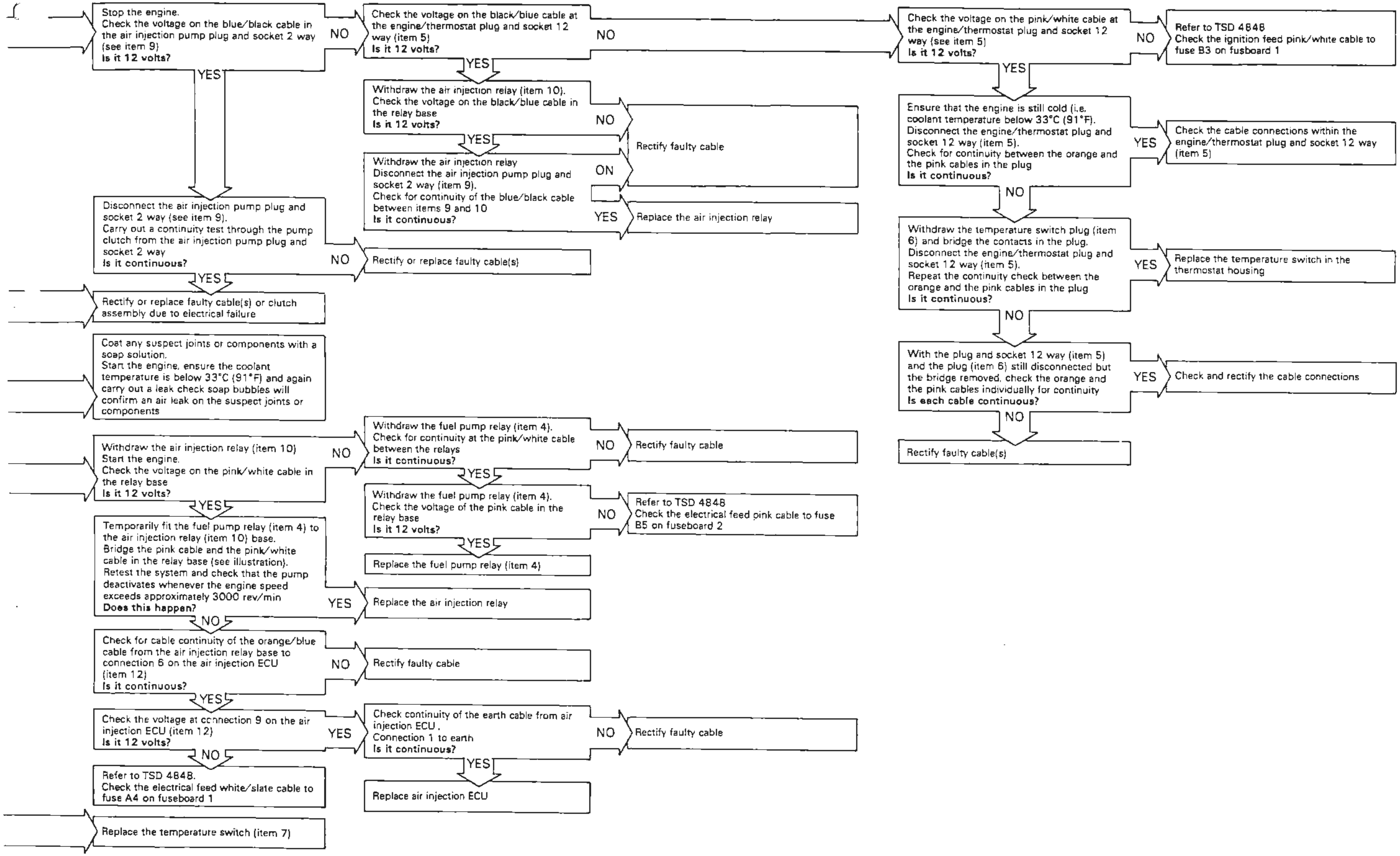
Stop the engine. Check the voltage on the blue/black cable in the air injection pump plug and socket 2 way (see item 9) **Is it 12 volts?**
NO
Check the voltage on the black/blue cable at the engine/thermostat plug and socket 12 way (item 5) **Is it 12 volts?**
NO
Check the voltage on the pink/white cable at the engine/thermostat plug and socket 12 way (see item 5) **Is it 12 volts?**
NO
Refer to TSD 4848 Check the ignition feed pink/white cable to fuse B3 on fusboard 1
YES
Withdraw the air injection relay (item 10). Check the voltage on the black/blue cable in the relay base **Is it 12 volts?**
NO
Rectify faulty cable
YES
Withdraw the air injection relay Disconnect the air injection pump plug and socket 2 way (item 9). Check for continuity of the blue/black cable between items 9 and 10 **Is it continuous?**
ON
YES
Replace the air injection relay
YES
Ensure that the engine is still cold (i.e. coolant temperature below 33°C (91°F). Disconnect the engine/thermostat plug and socket 12 way (item 5). Check for continuity between the orange and the pink cables in the plug **Is it continuous?**
YES
Check the cable connections within the engine/thermostat plug and socket 12 way (item 5)
NO
Withdraw the temperature switch plug (item 6) and bridge the contacts in the plug. Disconnect the engine/thermostat plug and socket 12 way (item 5). Repeat the continuity check between the orange and the pink cables in the plug **Is it continuous?**
YES
Replace the temperature switch in the thermostat housing
NO
With the plug and socket 12 way (item 5) and the plug (item 6) still disconnected but the bridge removed, check the orange and the pink cables individually for continuity **Is each cable continuous?**
YES
Check and rectify the cable connections
NO
Rectify faulty cable(s)
YES
Disconnect the air injection pump plug and socket 2 way (see item 9). Carry out a continuity test through the pump clutch from the air injection pump plug and socket 2 way **Is it continuous?**
NO
Rectify or replace faulty cable(s)
YES
Rectify or replace faulty cable(s) or clutch assembly due to electrical failure
Coat any suspect joints or components with a soap solution. Start the engine, ensure the coolant temperature is below 33°C (91°F) and again carry out a leak check soap bubbles will confirm an air leak on the suspect joints or components
Withdraw the air injection relay (item 10) Start the engine. Check the voltage on the pink/white cable in the relay base **Is it 12 volts?**
NO
Withdraw the fuel pump relay (item 4). Check for continuity at the pink/white cable between the relays **Is it continuous?**
NO
Rectify faulty cable
YES
Withdraw the fuel pump relay (item 4). Check the voltage of the pink cable in the relay base **Is it 12 volts?**
NO
Refer to TSD 4848 Check the electrical feed pink cable to fuse B5 on fuseboard 2
YES
Replace the fuel pump relay (item 4)
YES
Temporarily fit the fuel pump relay (item 4) to the air injection relay (item 10) base. Bridge the pink cable and the pink/white cable in the relay base (see illustration). Retest the system and check that the pump deactivates whenever the engine speed exceeds approximately 3000 rev/min **Does this happen?**
YES
Replace the air injection relay
NO
Check for cable continuity of the orange/blue cable from the air injection relay base to connection 6 on the air injection ECU (item 12) **Is it continuous?**
NO
Rectify faulty cable
YES
Check the voltage at connection 9 on the air injection ECU (item 12) **Is it 12 volts?**
YES
Check continuity of the earth cable from air injection ECU. Connection 1 to earth **Is it continuous?**
NO
Rectify faulty cable
YES
Replace air injection ECU
NO
Refer to TSD 4848. Check the electrical feed white/slate cable to fuse A4 on fuseboard 1
Replace the temperature switch (item 7)

Catalytic converter system

The catalytic converter system uses two main converters mounted in parallel and a warm-up converter which houses a heated oxygen sensor in its outlet cone. A three-way catalyst is used in each converter.

The **warm-up converter** is positioned downstream of the turbocharger and close to the engine. This is to minimise the time taken to reach its operating temperature.

To further reduce warm-up time, the warm-up converter and the pipe leading from the turbocharger are lagged with a thermal insulating material.

When the engine is running under boost conditions a proportion of the exhaust gas is diverted around the warm-up converter. The diverted gases by-pass both the turbocharger (to limit boost pressure) and the warm-up converter (to limit converter temperature).

The **twin main catalytic converters** are situated in the central under floor area. The connecting pipes between the warm-up converter and the main converters are partly lagged with thermal insulating material to retain exhaust heat for optimum catalytic conversion.

Each three-way catalytic converter promotes reactions between the hydrocarbons, carbon monoxide, oxides of nitrogen and residual oxygen in the exhaust gas. Optimum catalytic conversion efficiency is achieved when an essentially stoichiometric air/fuel mixture is present. This condition is achieved by means of the 'closed loop' mixture control system (see Chapter B).

Warm-up catalytic converter assembly – To remove and fit

1. Unscrew and remove the oxygen sensor.
2. On cars produced to the Japanese specification, unscrew and remove the exhaust thermocouple probe.
3. Unscrew the clamp nut from the three joints situated adjacent to the warm-up converter assembly.
4. Free the joint clamps and manipulate the assembly to release the joints. Collect the olive from the rear joint and the restrictor from the by-pass pipe.
5. Support the weight of the downtake pipes.
6. Unscrew and remove the nuts end clamps from the rear of the downtake pipes. Free the joints and withdraw the downtake pipes.
7. Unscrew the setscrew securing the warm-up converter bracket to the crankcase.
8. Withdraw the warm-up converter assembly.
9. Fit the assembly by reversing the procedure, noting the general fitting instructions.

Twin main catalytic converter assembly – To remove and fit

1. Remove the screws retaining the grass-fire shield(s) that are situated below the two catalytic converters.

Note Take care when removing the shield(s) as any sharp edges could cause injury to the operator's hands.

2. Ensure that the weight of the converter assembly is temporarily supported.
3. Support the weight of the exhaust system before

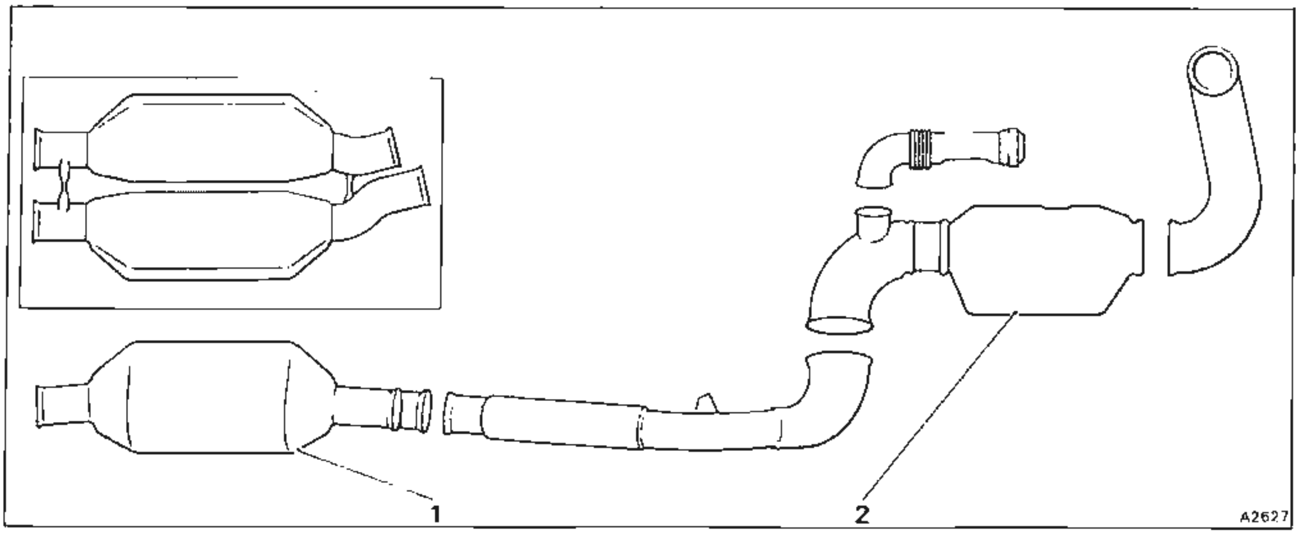

Fig. F8-1 Catalytic converter system
1 Twin main catalytic converters
2 Warm-up catalytic converter

and after the converters assembly.

4. Locate the exhaust joints before and after the converter assembly.
5. Unscrew the nuts from the exhaust clamps. Collect the washers, withdraw the bolts and free the clamps.
6. Discard the temporary support and withdraw the twin catalytic converters assembly.
7. Collect the four sealing rings from the joints as the assembly is removed.
8. Fit the catalytic converter assembly by reversing the removal procedure, noting the general fitting instructions.

General fitting instructions

The sealing rings and pipe flares must be thoroughly clean and free from scale. They may be lightly dressed with fine emery cloth if required.

1. Apply Never-seez anti-seize compound to the clamp bolt threads before assembly.
2. The sealing rings, pipe flares and grooves in the spherical joint clamp brackets should be lightly smeared with either graphite lubricant or Never-seez compound. This will assist alignment of the parts upon assembly.
3. The parts should be loosely assembled and then manoeuvred to give the best alignment, before the joints are tightened.
4. Smear the threads of the oxygen sensor with Never-seez assembly compound. It is important that the Never-seez is applied only to the threads of the unit. Care must be taken to ensure that the compound does not contact the slotted shield below the threaded portion.
5. Torque tighten the exhaust clamp nuts and oxygen sensor to the figures given in Chapter L.

Do not allow the assembly compound to enter the exhaust system, particularly up stream (in front) of the catalytic converters otherwise damage to the converters assembly will result.

Heated oxygen sensor

For details relating to the heated oxygen sensor refer to Chapter B.

Exhaust system temperature warning lamp

On cars conforming to a Japanese specification an exhaust temperature warning system is fitted. The warning panel for this system is situated on the facia. Illumination of the panel indicates that an excessive temperature condition caused through an engine malfunction has occurred in the exhaust system.

If an excessive temperature condition is indicated, stop the vehicle as soon as possible and switch off the ignition. After three minutes the engine may be started again and providing the warning lamp remains extinguished, the vehicle can be accelerated gently up to a speed of 30 km/h (18 mile/h). This speed must not be exceeded until the cause of the warning has been corrected by referring to the appropriate fault diagnosis flow chart (see fig. F8-4).

To check that the warning panel bulb is operating satisfactorily, ensure that the panel illuminates during engine cranking (i.e. starter motor engaged).

Exhaust system

For information relating to the remainder of the exhaust system refer to TSD 4700 Chapter Q, Exhaust system.

Catalytic converter protection

To protect the catalytic converters from possible damage the following precautions should be taken.

Unleaded gasolene

Use unleaded gasolene only 90 AKI (95 RON)* Min. The use of leaded gasolene will result in a substantial reduction in the performance of the catalyst.

Under no circumstances add fuel system cleaning agents to the fuel tank for induction into the engine, as these materials may have a detrimental effect on the catalytic converters.

* AKI = Anti-knock index
RON = Research octane number

Engine malfunction

If the engine misfires or suffers from a lack of power that could be attributed to a malfunction in either the ignition system or fuel system, operation of the vehicle should be discontinued. Driving the vehicle with a malfunction could cause overheating and consequent damage to the catalytic converters.

Fuel

Do not allow the vehicle to run out of fuel. A warning lamp situated on the facia illuminates to warn the driver of a low fuel level. If the vehicle runs out of fuel at high speed, possible damage to the catalytic converters could result.

Starting the engine

The vehicle must not be pushed or towed to start the engine. Failure to observe this warning could cause overheating and consequent damage to the catalytic converters.

Exhaust emission control system

It is important that the vehicle is maintained in its correct operating condition. Failure to do so will result not only in loss of fuel economy and emission control but could also cause damage to the catalytic converters due to overheating.

Figure F8-2

Exhaust temperature warning system – fault diagnosis chart
Sheet 1 of 2

Printed in England

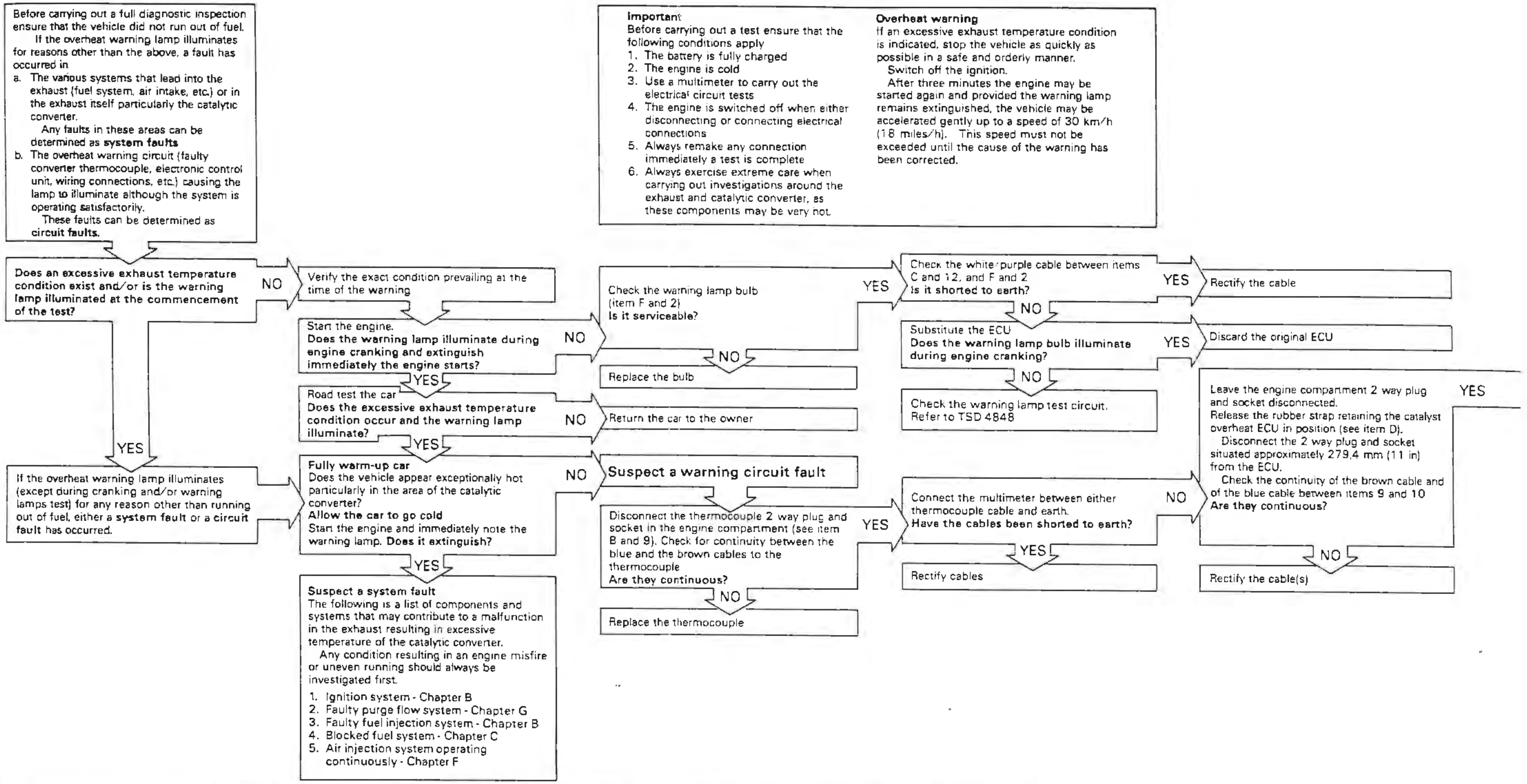

Before carrying out a full diagnostic inspection ensure that the vehicle did not run out of fuel.

If the overheat warning lamp illuminates for reasons other than the above, a fault has occurred in

a. The various systems that lead into the exhaust (fuel system, air intake, etc.) or in the exhaust itself particularly the catalytic converter.

Any faults in these areas can be determined as **system faults**

b. The overheat warning circuit (faulty converter thermocouple, electronic control unit, wiring connections, etc.) causing the lamp to illuminate although the system is operating satisfactorily.

These faults can be determined as **circuit faults.**

Important

Before carrying out a test ensure that the following conditions apply

1. The battery is fully charged
2. The engine is cold
3. Use a multimeter to carry out the electrical circuit tests
4. The engine is switched off when either disconnecting or connecting electrical connections
5. Always remake any connection immediately a test is complete
6. Always exercise extreme care when carrying out investigations around the exhaust and catalytic converter, as these components may be very hot.

Overheat warning

If an excessive exhaust temperature condition is indicated, stop the vehicle as quickly as possible in a safe and orderly manner.

Switch off the ignition.

After three minutes the engine may be started again and provided the warning lamp remains extinguished, the vehicle may be accelerated gently up to a speed of 30 km/h (18 miles/h). This speed must not be exceeded until the cause of the warning has been corrected.

Does an excessive exhaust temperature condition exist and/or is the warning lamp illuminated at the commencement of the test?

NO

YES

If the overheat warning lamp illuminates (except during cranking and/or warning lamps test) for any reason other than running out of fuel, either a **system fault** or a **circuit fault** has occurred.

Verify the exact condition prevailing at the time of the warning

Start the engine.
Does the warning lamp illuminate during engine cranking and extinguish immediately the engine starts?

NO

YES

Road test the car
Does the excessive exhaust temperature condition occur and the warning lamp illuminate?

NO

YES

Fully warm-up car
Does the vehicle appear exceptionally hot particularly in the area of the catalytic converter?
Allow the car to go cold
Start the engine and immediately note the warning lamp. **Does it extinguish?**

NO

YES

Suspect a system fault
The following is a list of components and systems that may contribute to a malfunction in the exhaust resulting in excessive temperature of the catalytic converter.

Any condition resulting in an engine misfire or uneven running should always be investigated first.

1. Ignition system - Chapter B
2. Faulty purge flow system - Chapter G
3. Faulty fuel injection system - Chapter B
4. Blocked fuel system - Chapter C
5. Air injection system operating continuously - Chapter F

Check the warning lamp bulb (item F and 2)
Is it serviceable?

YES

NO

Replace the bulb

Return the car to the owner

Suspect a warning circuit fault

Disconnect the thermocouple 2 way plug and socket in the engine compartment (see item B and 9). Check for continuity between the blue and the brown cables to the thermocouple
Are they continuous?

YES

NO

Replace the thermocouple

Check the white/purple cable between items C and 12, and F and 2
Is it shorted to earth?

YES

Rectify the cable

NO

Substitute the ECU
Does the warning lamp bulb illuminate during engine cranking?

YES

Discard the original ECU

NO

Check the warning lamp test circuit.
Refer to TSD 4848

Connect the multimeter between either thermocouple cable and earth.
Have the cables been shorted to earth?

YES

Rectify cables

NO

Leave the engine compartment 2 way plug and socket disconnected.
Release the rubber strap retaining the catalyst overheat ECU in position (see item D).

Disconnect the 2 way plug and socket situated approximately 279,4 mm (11 in) from the ECU.

Check the continuity of the brown cable and of the blue cable between items 9 and 10
Are they continuous?

YES

NO

Rectify the cable(s)

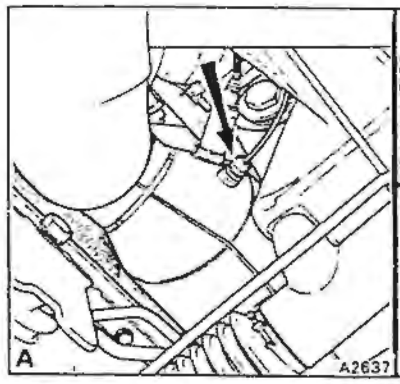

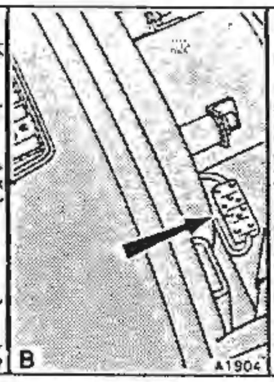

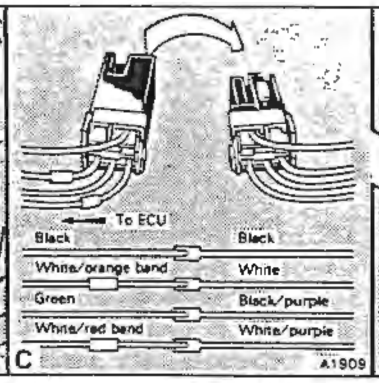

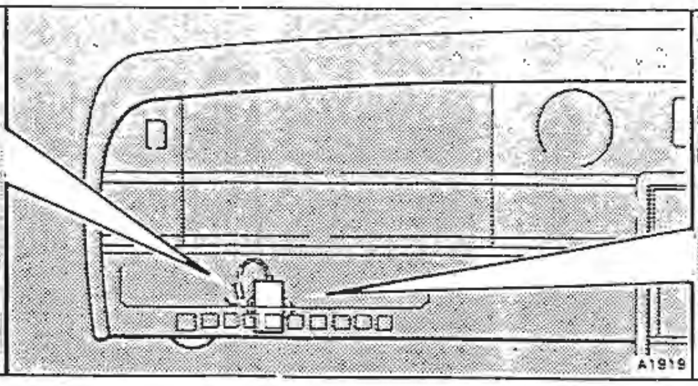

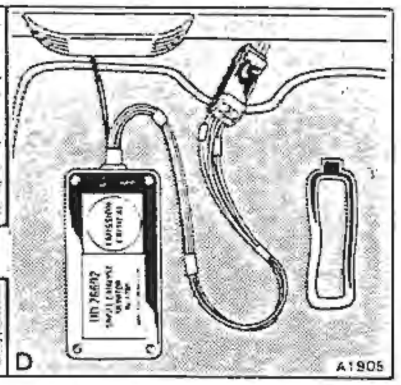

Figure F8-2

Exhaust temperature warning system – fault diagnosis chart
Sheet 2 of 2

Printed in England

Key

1 Diode board 10 way plug
2 Warning lamp
3 Other than Europe plug and socket
4 Engine running sensor plug and socket
5 Speedometer connection
6 Fuse
7 Right-hand 'A' post earth point
8 Thermocouple probe
9 Engine compartment plug and socket
10 Exhaust temperature werning 2 way plug and socket
11 Electrical control unit
12 Exhaust temperature warning 4 way plug and socket

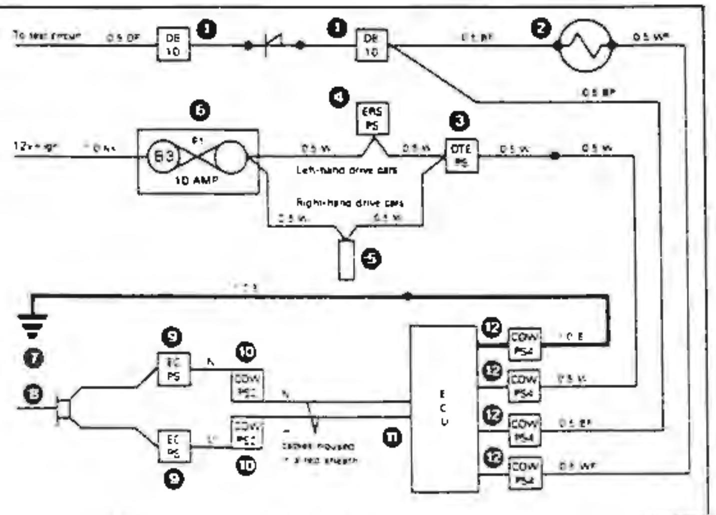

Keep the 2 way plug and socket disconnected.
Connect the multimeter between the end of the brown cable (see item 10) and earth.
Connect the multimeter from the engine compartment between the end of the blue cable (see item 10) and earth
Is either cable shorted to earth?

YES → Rectify the cable(s)

NO → Remake the electrical connections ensuring that the cable colours match (i.e. brown to brown)
Do the cable colours correspond?

NO → Remake the connections correctly

YES → 1. Disconnect the catalyst overheat ECU 4 way plug and socket (see items C, D, and 12)
2. Disconnect the diode board 10 way plug (see item E and 1)
Check the black/purple cable
Is it shorted to earth?

YES → Rectify the fault on the black/purple cable

NO → Check the warning lamp test circuit.
Refer to TSD 4848
Is it satisfactory?

NO → Rectify as necessary

YES → Check the colour matching of the cables in the 4 way connector (see items C, D, and 12)
Is the colour matching correct?

NO → Correct the cable mis-match

YES → Check the voltage on the white cable at the ECU 4 way plug and socket (see items C, D, and 12)
Is it 12 volts?

NO → Check the ignition feed white cable from the fuse for 12 volts supply (see wiring diagram)

YES → Check the white/purple cable from the ECU 4 way plug and socket (see items C, D, and 12) to the warning lamp bulb (see item F and 2)
Is it 12 volts?

NO → Check the white/purple cable for continuity and/or short circuiting to another cable

YES → Disconnect the ECU 4 way plug and socket (see items C, D, and 12)
Check the black cable to the earth point (see item G and 7)
Is it continuous ?

NO → Rectify the fault on the black cable

YES → Substitute both the ECU and thermocouple in turn, and repeat the test

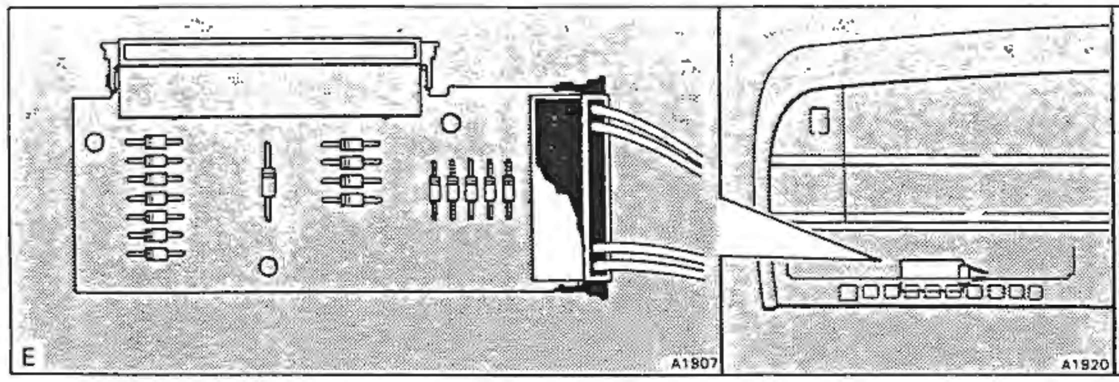

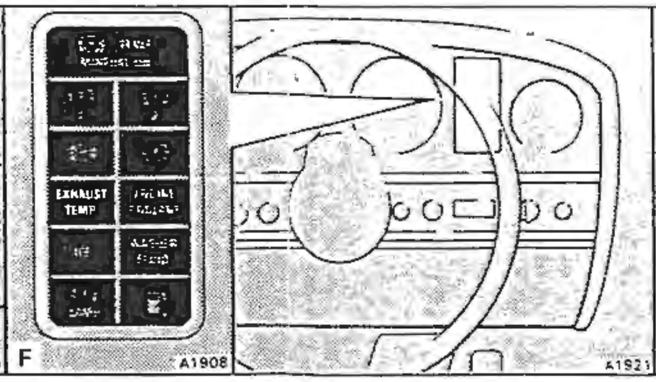

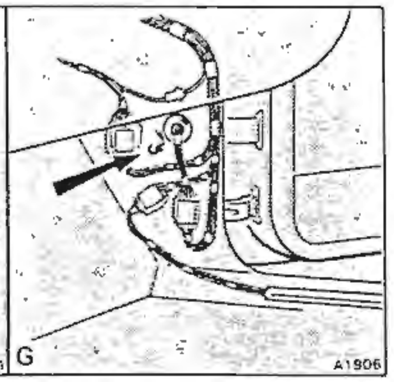

Fuel evaporative emission control system

Contents

Printed in England

Issue record sheet

The dates quoted below refer to the issue date of individual pages within this chapter.

Sections	G1	G2	G3							
Page No.										
1	5/88	10/86	5/88							
2		5/87	7/88							
3	2/90	5/87	7/88							
4		2/90	5/88							
5		10/86	5/88							
6										
7		2/90	7/88							
8										
9			7/88							
10			—							
11			5/88							
12			1/89							
13										
14										
15										
16										
17										
18										
19										
20										
21										
22										
23										
24										
25										
26										
27										
28										
29										
30										
31										
32										
33										
34										
35										
36										
37										
38										
39										
40										
41										
42										
43										
44										
45										
46										
47										
48										
49										
50										
51										
52										
53										
54										

Printed in England

Fuel evaporative emission control system

A fuel evaporative emission control system is fitted on all cars conforming to the following specifications.

Australian
Japanese
Middle East
North American
Taiwan

The system eliminates direct venting of the fuel tank and therefore, prevents the release of hydrocarbons into the atmosphere.

Fuel vapours from the fuel tank are collected and stored in a charcoal filled canister situated under the left-hand front wing. When the canister is purged, the stored fuel vapours are extracted from the charcoal and burnt in the engine.

The fuel tank is located at the forward end of the luggage compartment, behind the carpet covered panel.

An expansion tank situated within the fuel tank inhibits complete filling and provides fuel expansion volume to cope with extreme temperature conditions.

A combined pressure/vacuum relief valve is located in the fuel filler cap.

A rollover tube with a restrictor is incorporated in the vent line from the fuel tank to the control canister.

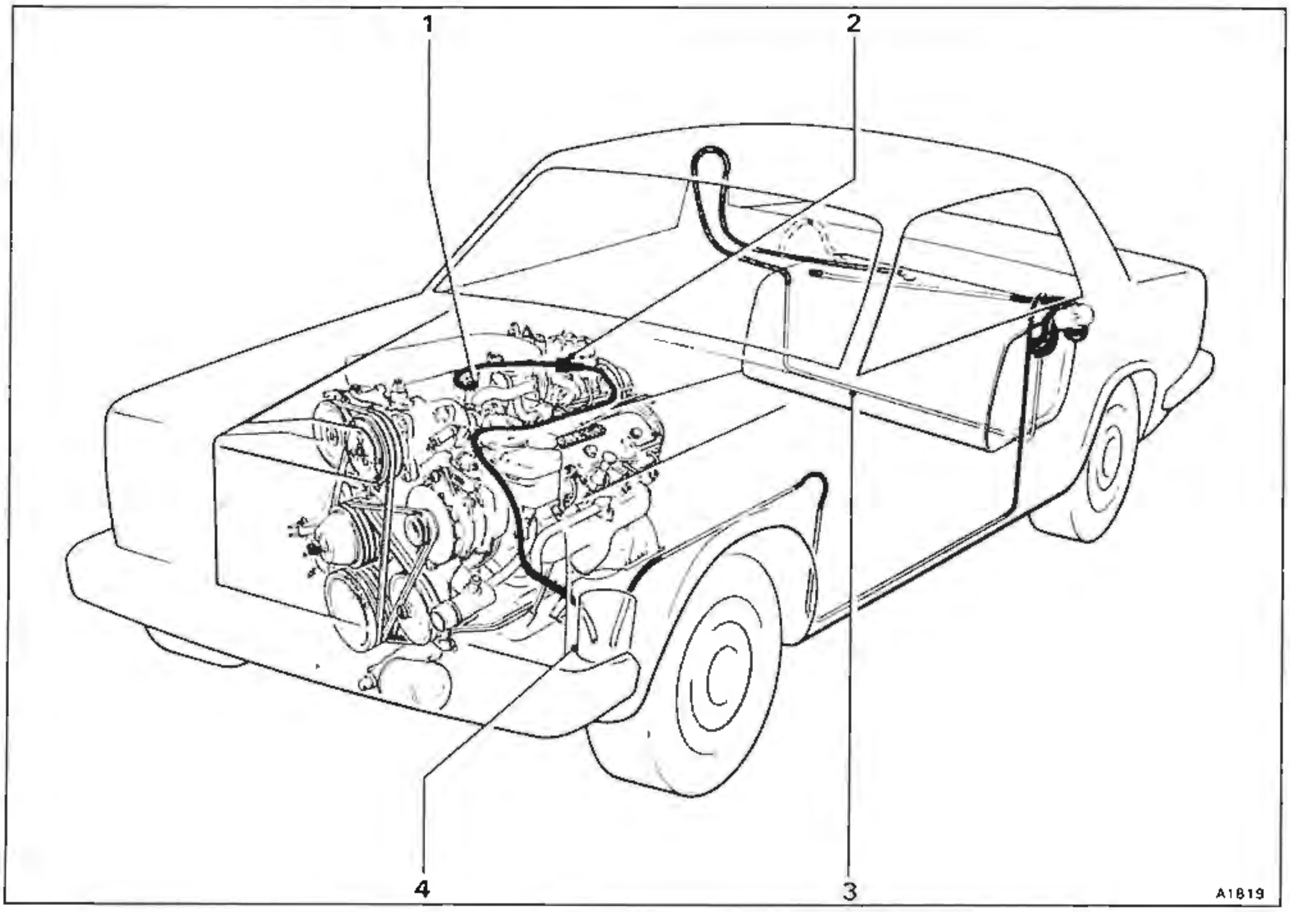

Fig. G2-1 **Fuel evaporative emission control system**

1	Purge connection
2	Control solenoid
3	Rollover tube
4	Canister
═══	4 door cars
- - - -	2 door cars

Note The purge connection to the engine varies slightly depending upon the specification of the vehicle.

On cars conforming to either the North American or Japanese specifications the purge connection is to the the air guide housing (as illustrated above).

On cars conforming to the Australian, Middle East, or Taiwan specifications the purge connection is to the throttle housing.

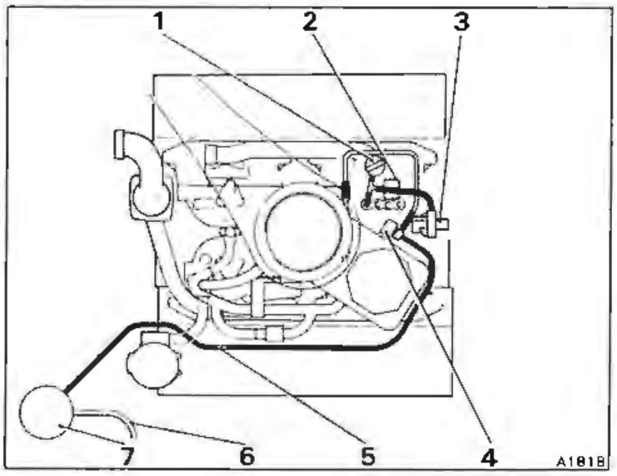

Fig. G2-2 Purge control system (Turbocharged engines)
1 Dump valve vacuum switch
2 Dump valve solenoid valve
3 Purge control vacuum switch
4 Purge control solenoid
5 Adapter
6 Hose from fuel tank vent
7 Canister

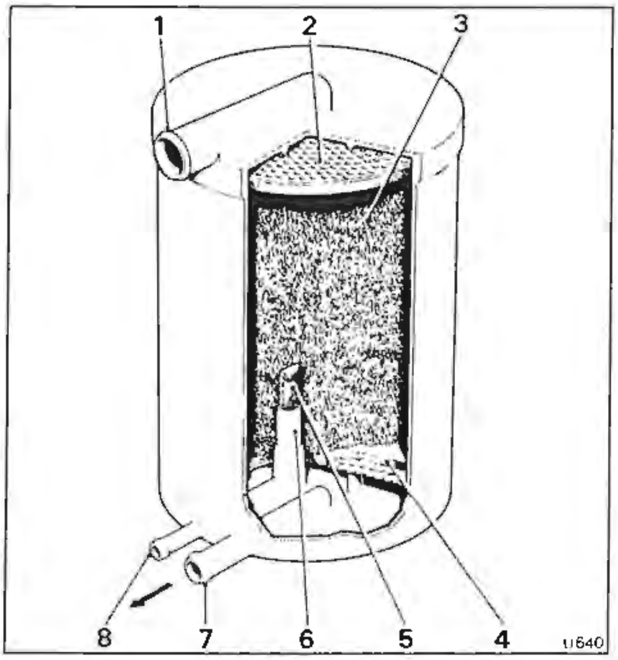

Fig. G2-3 Emission control canister
1 Air intake
2 Baffle
3 Carbon granules
4 Baffle mat
5 Screen
6 Stand tube
7 Purge line connection
8 Fuel tank vent connection

This prevents fuel from reaching the canister during harsh manoeuvres or in the event of vehicle inversion.

For details of the servicing and maintenance requirements of the system, refer to the Service Schedules Manual TSD 4702.

Naturally aspirated engines (see fig. G2-1)
Operation of the purge system is controlled by a solenoid mounted in front of the ignition distributor. This solenoid is controlled by the throttle position switch and also on cars conforming to an Australian, Japanese, or North American specification, by a switch mounted in the thermostat housing.

The canister is purged whenever the engine is running except at the idle speed setting, or on cars fitted with the thermostat housing switch, if the coolant temperature is low.

Turbocharged engines (see fig. G2-2)
The purge control system comprises a solenoid valve and a vacuum switch.

As the accelerator pedal is lightly depressed with the engine running, a gated orifice is uncovered by one of the throttle plates. The increasing vacuum then applied to the control line via the throttle housing, solenoid valve, and hoses draws the stored vapours from the canister into the induction manifold.

When the accelerator pedal is further depressed, the manifold vacuum falls, and at a predetermined value the vacuum switch operates to close the solenoid valve. This seals the purge line to prevent a reverse flow occurring under boost conditions.

Emission control canister

The evaporative emission control canister is mounted under the left-hand wing. It is a cylindrical container filled with activated carbon granules. These granules are retained within the canister by a system of baffles and screens as shown in figure G2-3.

The top of the canister incorporates a tube, open to atmosphere to admit purge intake air. In the base of the assembly is one connection for the fuel tank vent hose and another connection for the purge line.

At the mileage specified in the service schedules remove the control canister and fit a new assembly.

Emission control canister – To remove and fit

1. Locate the emission control canister under the left-hand front wing (see fig. G2-4). Using the special pliers RH 8090 remove the securing clip from the canister end of the purge hose.
2. Withdraw both hoses fitted to the canister. Label each one to facilitate assembly.
3. Unscrew the four setscrews retaining the control canister in position.
4. Withdraw the canister from under the wing.
5. Note the position of the canister in relation to the mounting bracket and unscrew the retaining worm drive clip.
6. Fit the new canister to the mounting bracket and tighten the retaining worm drive clip.

7. Ensure that the canister is in the correct position relative to the mounting bracket.
8. Fit the assembly to the vehicle by reversing the procedure given for removal, noting that a new hose securing clip should be used.

Fuel tank vent

The fuel tank is vented to the filler neck via two connections. This allows adequate venting of the tank during filling.

A separate vapour line from the centre of the tank (the rollover tube) almost encircles the tank before passing to the evaporative loss canister. The vent line is situated under the floor of the car on the left-hand side as shown in figure G2-1. It includes a restrictor at its highest point and passes around the tank to prevent liquid fuel from entering the canister during harsh manoeuvres or in the event of vehicle inversion.

In the event of a blockage in the vapour line to the control canister, a combined pressure and vacuum relief valve is incorporated into the fuel filler cap. The valve prevents an excessive pressure build-up in the fuel tank caused by fuel vaporization or vacuum as the fuel is consumed.

For all other details of the fuel tank refer to Chapter C, Fuel system.

Fuel evaporative emission control system – To leak check

Whenever the various pipes, hoses, and components of the fuel evaporative emission control system are disturbed, the system should be checked for air leaks upon assembly.

To test the system proceed as follows.

1. Withdraw the fuel tank hose from the canister and connect it to the test equipment shown in figure G2-5.
2. Apply air pressure to the fuel tank hose via the test equipment. Apply pressure until a reading of 380 mm (15 in) H_2O is attained and then close the pressure supply.
3. After five minutes again check the pressure reading. The reading should not have fallen by more than 12,7 mm (0.50 in).
4. If the pressure drop is more than 12,7 mm (0.50 in) progressively treat all joints in the system with a soap solution to detect air leaks.
5. Rectify any air leaks and again 'leak check' the system.
6. During the five minutes leak down, visually inspect the hoses, pipes, and connections that are routed under the car. Commence where the hose exits from the body at the rear and follow the system to the loss control canister.

Ensure that the hoses are secure in the mounting clips.

7. When the system is satisfactory, detach the test equipment and connect the hose to the control canister.

Purge line

The purge line connects the control canister to the engine induction system.

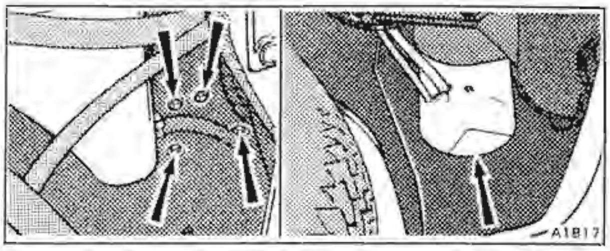

Fig. G2-4 **Fuel evaporative control canister and mounting bracket setscrews.**

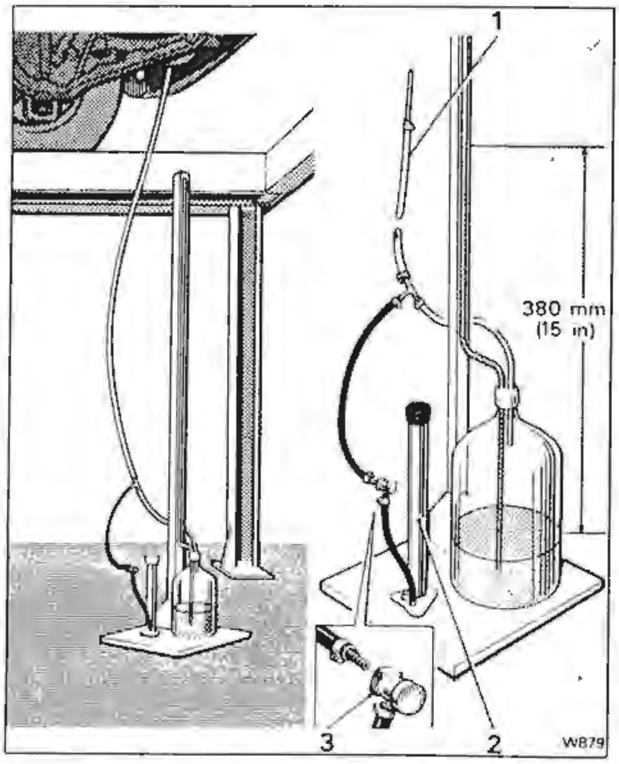

Fig. G2-5 **Leak check test equipment**
1 Connection to fuel tank/canister hose
2 Pump
3 One-way pressure valve

Air from the atmosphere is drawn downwards through the carbon granules in the canister and collects the stored fuel vapours. This mixture then passes from the base of the canister to the throttle body or the air guide housing, where it is drawn into the engine induction system.

Purge flow rate – To check

Naturally aspirated engines

1. Fit a flowmeter RH 8725 between the pipe from the canister and the hose to the control solenoid (see fig. G2-6).
2. Start the engine.
3. On cars conforming to an Australian, Japanese, or North American specification, ensure that the coolant temperature is above 33°C (91°F).

Printed in England

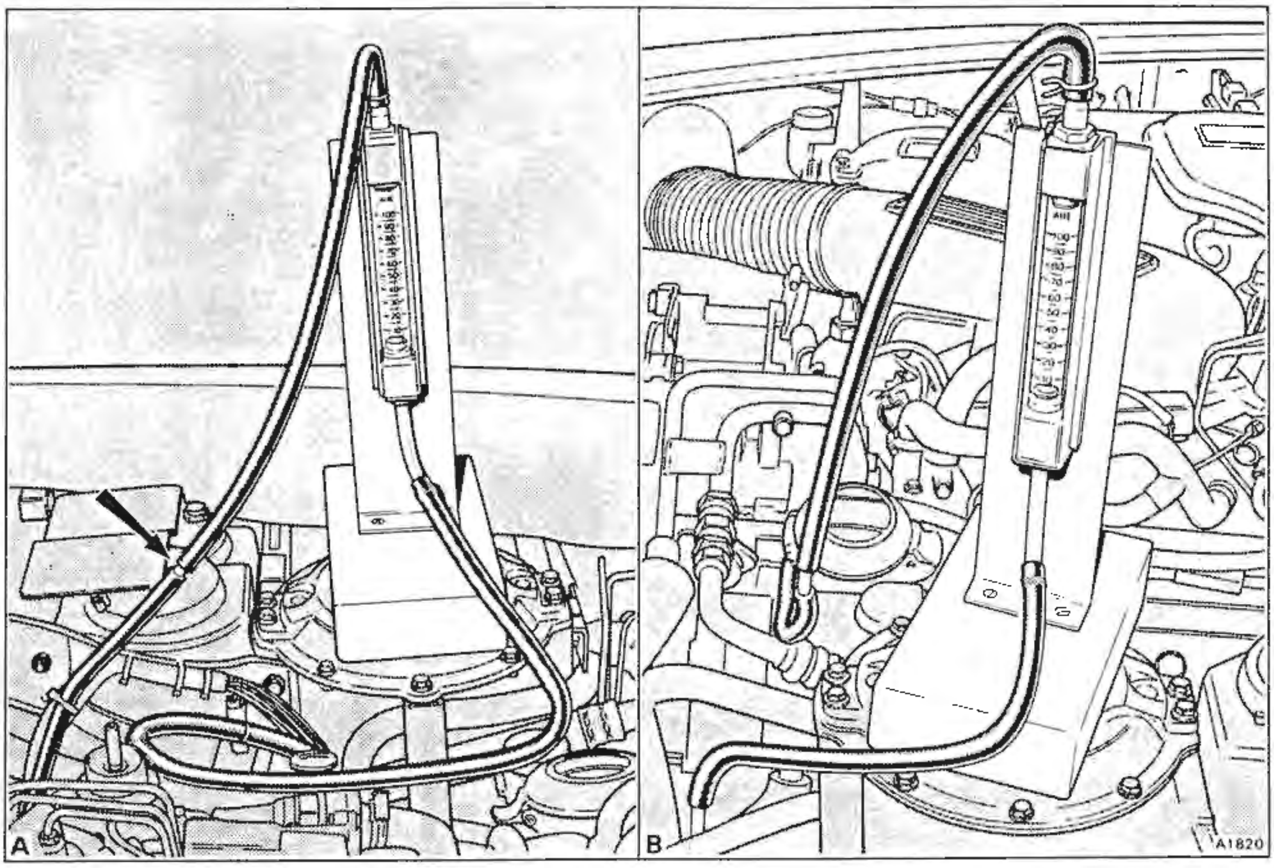

Fig. G2-6 Connecting the flowmeter
A Turbocharged engines
B Naturally aspirated engines

4. Increase the engine speed to 2500 rev/min by opening the throttles.
5. Check that the purge flow rate complies with the following chart.

Specification	Flow rate	
	ft^3/h	litres/min
Japanese	15-30	7,1-14,1
North American		
Australian	20-40	9,4-18,8
Middle East		
Taiwan		

Turbocharged engines
1. Fit a flowmeter RH 8725 between the hose from the canister and the adapter (see fig. G2-6).
2. Disconnect the hose from the purge control vacuum switch.
3. Connect the Mityvac pump RH 12495 to the vacuum switch.
4. Start the engine and apply a vacuum of 381 mm Hg (15 in Hg) to the vacuum switch.

The control solenoid should now open and the flow through the system register on the flowmeter.

5. Increase the engine speed to 2500 rev/min.
6. Check that the purge flow rate is between 20 ft^3/h and 40 ft^3/h (9,4 litres/min and 18,8 litres/min).

All cars

If the flow is less than the minimum, check for the following.
1. Air leak in hoses/pipes.
2. Blockage in hoses/pipes.
3. Control system malfunction.
4. Incorrect ignition timing.

If the flow is in excess of the maximum, check for the following.
1. Excessive lean mixture strength.
2. Incorrect ignition timing.
3. Air leak between the throttle body and the induction manifold.

Figure G2-7

Purge control system – fault diagnosis chart

(Naturally aspirated engines)

Important
Before carrying out a test ensure that the following conditions apply
1. The battery is fully charged
2. The engine is cold
3. Use a multimeter to carry out the tests
4. The ignition is switched off when either disconnecting or connecting electrical connections
5. Always remake any connections immediately a test is completed
6. Ensure that fuse B3 on fuseboard 1 is intact
7. Visually inspect the hoses for deterioration

Key

1	Fuse
2	Temperature switch plug and socket (12 way)
3	Temperature switch plug
4	Temperature switch
5	Diode
6	Solenoid plug and socket (2 way)
7	Solenoid valve
8	Engine earth point
9	Throttle position switch plug and socket (4 way)
10	Throttle position switch plug
11	Throttle position switch
●	Splice

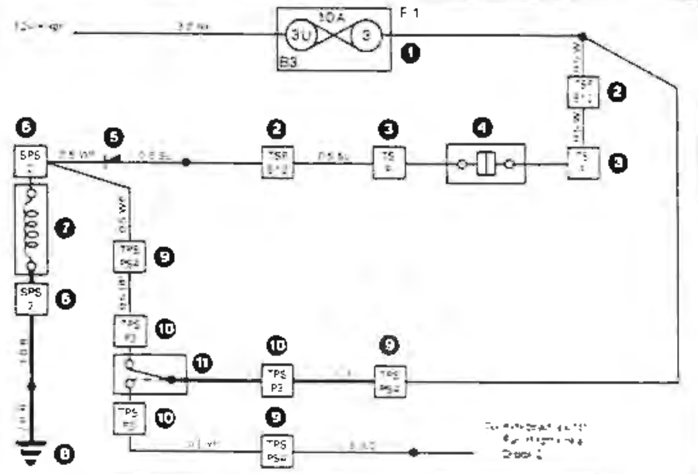

Check the purge flow rate

Detach the hose from the wing valance pipe (see item A)
Fit an additional hose to the valance pipe
Can you blow down the hose and through the canister?

NO

Investigate and rectify a blocked pipe and/or canister

YES

Ignition off
Can you blow down the hose and through the solenoid?

NO

Investigate and rectify blocked hoses to the throttle body or renew the control solenoid (see item 7)

YES

Ignition on
Can you blow down the hose and through the solenoid?

YES

Measure the voltage on the white/purple cable at the solenoid plug and socket (see item B and 6)
Is it 12 volts?

NO

Check a. Throttle position switch and circuit
b. Temperature switch and circuit

YES

Disconnect the solenoid plug and socket
Check the black cable to earth for continuity.
Is it continuous?

YES

Replace the solenoid

NO

Rectify the fault on the black earth cable

NO

Disconnect the throttle position switch at the plug and socket (see item C and 9)
Ignition on
Can you blow down the hose and through the solenoid?

YES

Check the temperature switch circuit
Leave the throttle position switch disconnected.
Disconnect the temperature switch plug (see item D and 3).
Bridge the cables in the plug.
Ignition on
Can you blow down the hose and through the solenoid?

NO

Replace the temperature switch

YES

Unbridge the temperature switch plug
Measure the voltage on the white cable in the temperature switch plug.
Is it 12 volts?

NO

Refer to TSD 4701
Check the ignition feed white cable to fuse B3 on fuseboard 1

YES

Measure the voltage on the slate/blue cable as it enters the diode (see item F and 5)
Is it 12 volts?

NO

Check for continuity of the slate/blue cable from the diode to the temperature switch plug (see item D and 5).
This will include the 12 way connector (see item E and 2)

YES

Measure the voltage on the white/purple cable as it exits from the diode
Is it 12 volts?

NO

Replace the diode

YES

Measure the voltage on the white/purple cable at the solenoid plug and socket (see item B and 6)
Is it 12 volts?

NO

Check for continuity of the white/purple cable from the control solenoid plug and socket (see item B and 6) to either
Temperature switch circuit – The diode (see item F and 5)
The throttle switch circuit – The switch plug and socket (see item C and 9)

YES

Disconnect the solenoid plug and socket.
Check for continuity on the black cable from this plug to the engine earth point (see item G and 8)
Is it continuous?

NO

Rectify the fault on the black earth cable

YES

Replace the solenoid

NO

Detach the temperature switch plug (see item D and 3)
Ignition on
Can you blow down the hose and through the solenoid?

YES

Check the throttle switch circuit
leave the temperature switch plug disconnected.
Measure the voltage on the white cable at the throttle position switch plug and socket (see item C and 9).
Is it 12 volts?

NO

Refer to TSD 4701
Check the ignition feed white cable to fuse B3 on fuseboard 1

YES

Ensure that the throttles are closed.
Measure the voltage on the blue/purple cable at the throttle position switch plug and socket
Is it 12 volts?

YES

Measure the voltage on the white/purple cable at the solenoid plug and socket (see item B and 6)
Is it 12 volts?

NO

Replace the throttle position switch

NO

Detach the temperature switch plug (see item D and 3)
Ignition on
Partially open the throttles
Can you blow down the hose and through the solenoid?

NO

Check the throttle switch circuit

YES

Control systems function satisfactorily

Cars produced to a Middle East and Taiwan specification do not have a temperature switch

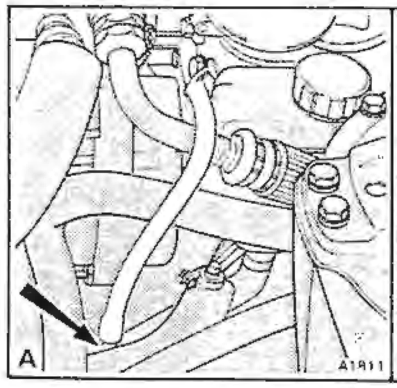

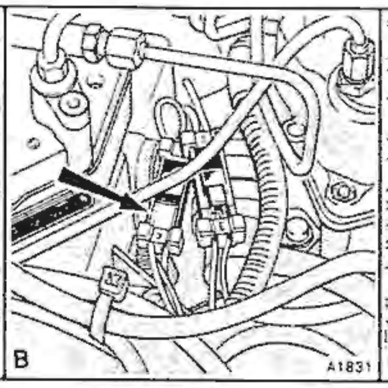

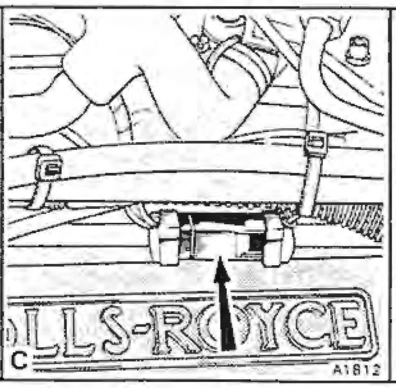

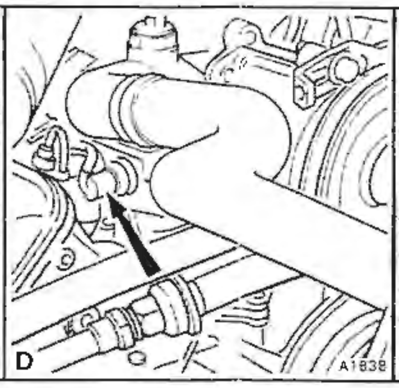

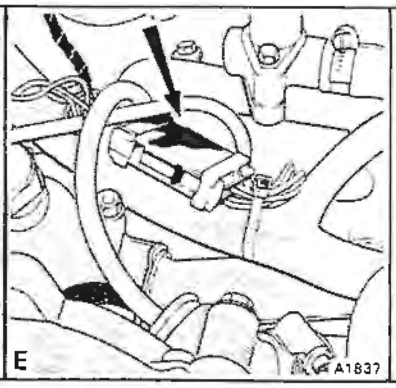

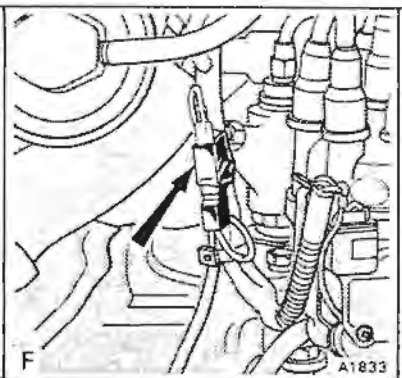

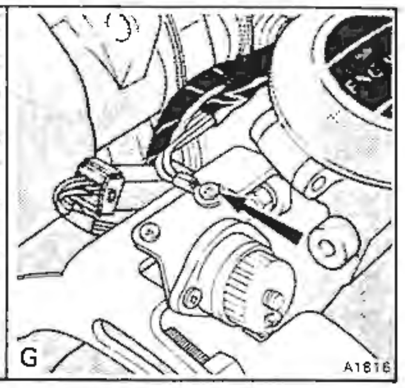

Figure G2-8

Purge control system – fault diagnosis chart

(Turbocharged engines)

Printed in England

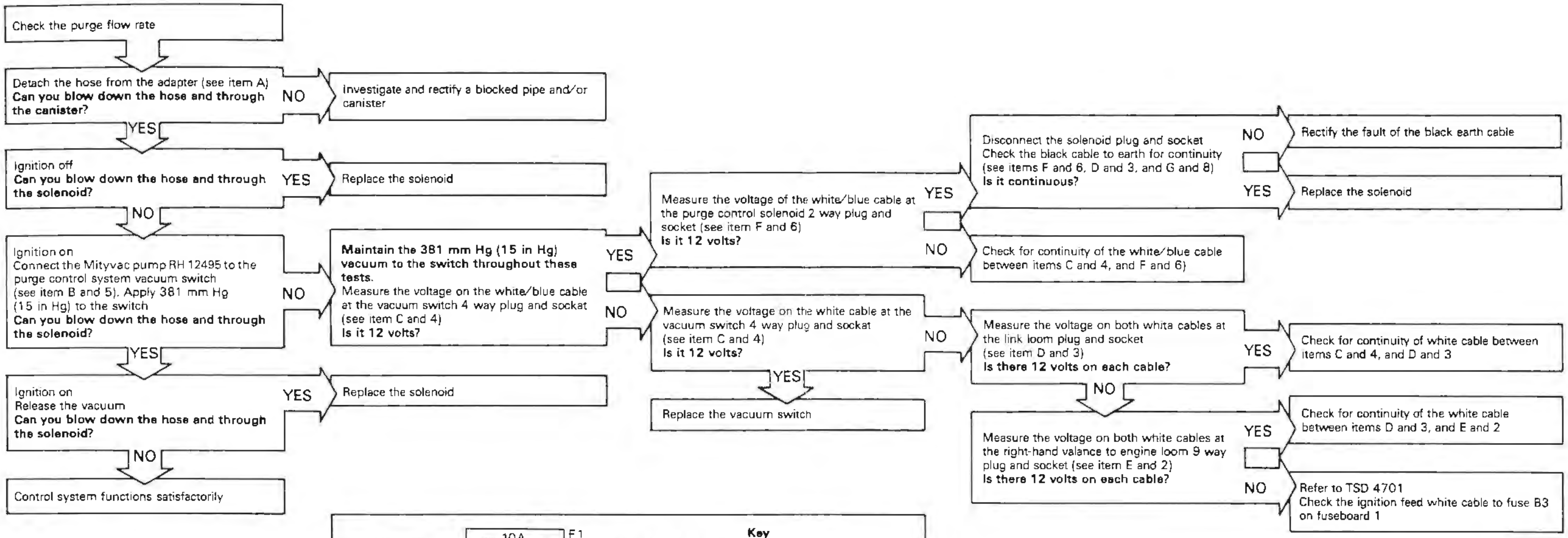
Check the purge flow rate

Detach the hose from the adapter (see item A)
Can you blow down the hose and through the canister?

NO → Investigate and rectify a blocked pipe and/or canister

YES

Ignition off
Can you blow down the hose and through the solenoid?

YES → Replace the solenoid

NO

Ignition on
Connect the Mityvac pump RH 12495 to the purge control system vacuum switch (see item B and 5). Apply 381 mm Hg (15 in Hg) to the switch
Can you blow down the hose and through the solenoid?

NO → **Maintain the 381 mm Hg (15 in Hg) vacuum to the switch throughout these tests.**
Measure the voltage on the white/blue cable at the vacuum switch 4 way plug and socket (see item C and 4)
Is it 12 volts?

YES → Measure the voltage of the white/blue cable at the purge control solenoid 2 way plug and socket (see item F and 6)
Is it 12 volts?

YES → Disconnect the solenoid plug and socket
Check the black cable to earth for continuity (see items F and 6, D and 3, and G and 8)
Is it continuous?

NO → Rectify the fault of the black earth cable

YES → Replace the solenoid

NO → Check for continuity of the white/blue cable between items C and 4, and F and 6)

NO → Measure the voltage on the white cable at the vacuum switch 4 way plug and socket (see item C and 4)
Is it 12 volts?

YES → Replace the vacuum switch

NO → Measure the voltage on both white cables at the link loom plug and socket (see item D and 3)
Is there 12 volts on each cable?

YES → Check for continuity of white cable between items C and 4, and D and 3

NO → Measure the voltage on both white cables at the right-hand valance to engine loom 9 way plug and socket (see item E and 2)
Is there 12 volts on each cable?

YES → Check for continuity of the white cable between items D and 3, and E and 2

NO → Refer to TSD 4701
Check the ignition feed white cable to fuse B3 on fuseboard 1

YES

Ignition on
Release the vacuum
Can you blow down the hose and through the solenoid?

YES → Replace the solenoid

NO

Control system functions satisfactorily

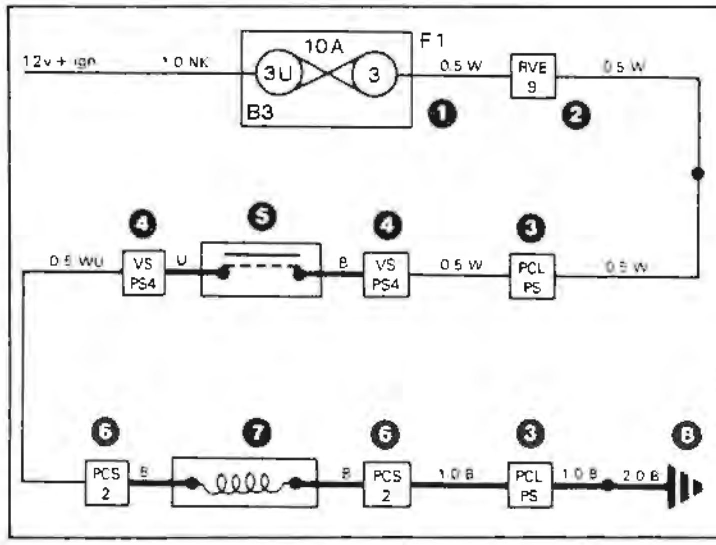

Key

1	Fuse
2	Right-hand valance to engine loom plug and socket (9 way)
3	Purge control link loom plug and socket
4	Vacuum switch socket (4 way)
5	Vacuum switch
6	Solenoid plug and socket (2 way)
7	Solenoid valve
8	Engine earth point
●	Splice

Important
Before carrying out a test ensure that the following conditions apply.

1. The battery is fully charged
2. The engine is cold
3. Use a multimeter to carry out the tests
4. The ignition is switched off when either disconnecting or connecting electrical connections
5. Always remake any connections immediately a test is completed
6. Visually inspect the system hoses for deterioration
7. Ensure fuse B3 on fuseboard 1 is intact

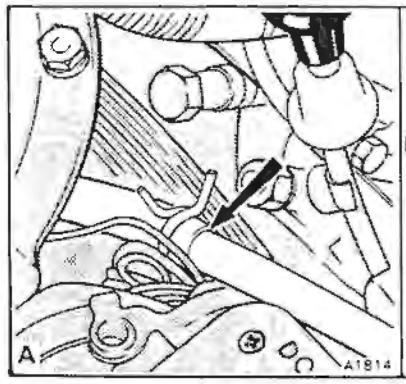

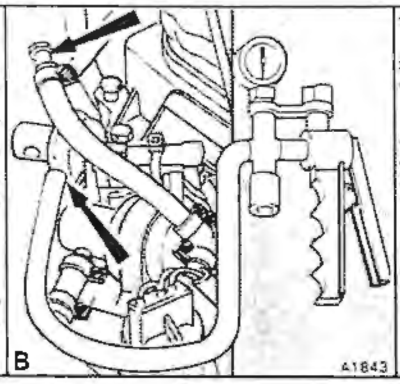

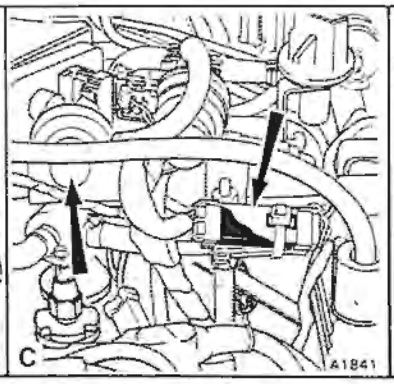

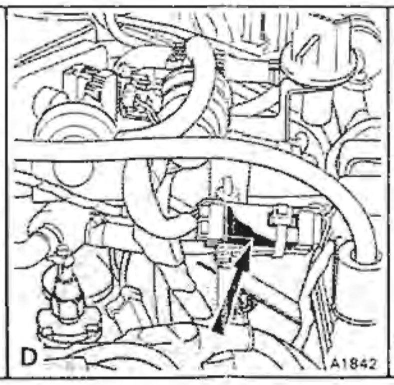

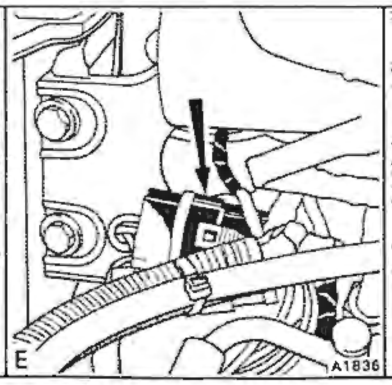

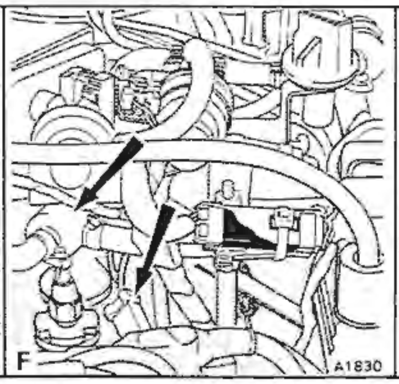

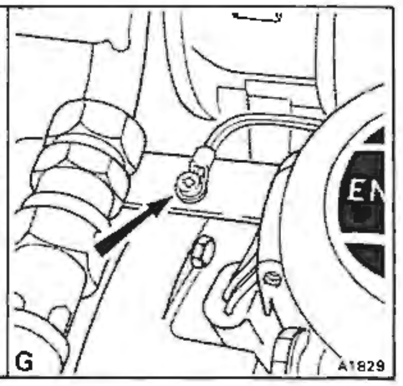

Fuel evaporative emission control system

The fuel evaporative emission control system differs between turbocharged and naturally aspirated cars and also, between naturally aspirated 4 door saloons and 2 door convertibles (see figs. G3-1 and G3-2).

With all systems however, the principle of operation is to eliminate direct venting of the fuel tank and therefore, to prevent the release of hydrocarbons to the atmosphere.

Fuel vapours from the fuel tank are collected and stored in a charcoal filled adsorption canister situated under the front left-hand wing of the vehicle. When the canister is purged, the stored fuel vapours are extracted from the charcoal and burnt in the engine.

The fuel tank is located at the forward end of the luggage compartment, behind a carpet covered panel.

An expansion tank situated within the main fuel tank inhibits complete filling and provides fuel expansion volume to cope with extreme ambient temperature conditions.

A combined pressure/vacuum relief valve is located in the fuel filler cap.

A rollover tube with a restrictor is incorporated in the vent line from the fuel tank to the control canister. This prevents fuel from reaching the canister during harsh manoeuvres or in the event of vehicle inversion.

For details of the servicing and maintenance requirements of the system, refer to the Service Schedules Manual TSD 4702.

Naturally aspirated cars

The principle of operation for both 2 door and 4 door cars is identical, however, the emission control canister fitted under the front left-hand wing, is installed forward of the wheel arch on 2 door cars and behind the wheel arch on 4 door cars.

Fuel vapour that accumulates in the top of the fuel tank is routed from the centre vent, around the tank and to the inlet connection on the control

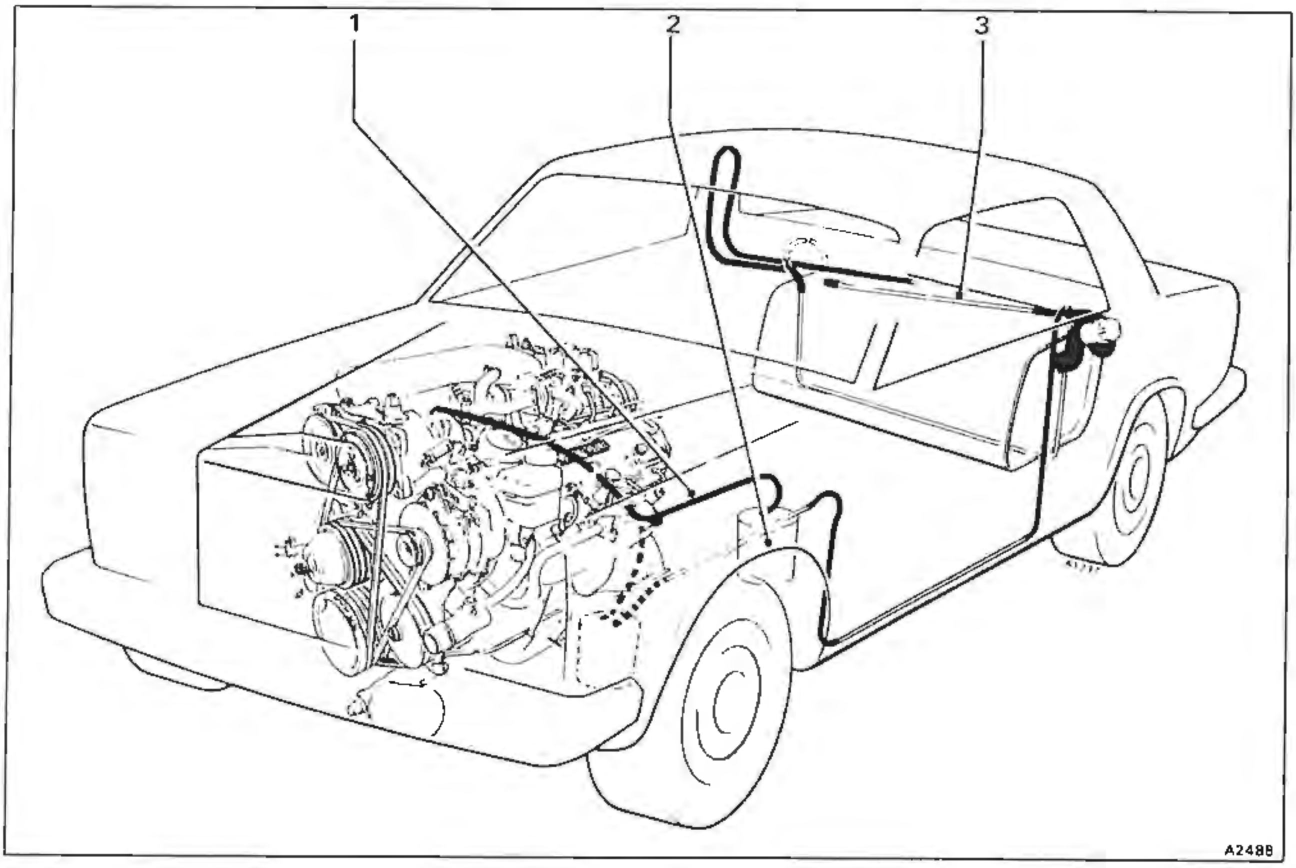

Fig. G3-1 Fuel evaporative emission control system — General view

1 Purge line
2 Canister
3 Rollover tube

▬ Saloon
┅ Convertible

canister. The flow of vapour in the line is controlled by a vent valve which opens when the vapour pressure reaches a pre-determined level. This allows the vapour to pass into the control canister where it is stored by the carbon granules.

The canister is purged at most times when the engine is running and the stored fuel vapour is drawn from the control canister via a restrictor, into the induction manifold. The vapour is then drawn into the engine cylinders with the fuel/air mixture where it is burnt.

The purging of the storage canister is controlled by a cut-off solenoid which closes the purge line whenever the engine is running at the idle speed setting, or if the engine is operating below a pre-determined temperature (except cars produced to the Middle East and Taiwan specification).

Turbocharged cars

The fuel vapour that accumulates in the top of the fuel tank is routed from the centre vent, around the tank and to the inlet connection on the control canister. The flow of vapour in the line is controlled by a vent valve which opens when the vapour pressure reaches a predetermined level. This allows the vapour to pass into the control canister where it is stored by the carbon granules.

The canister is only purged when the engine is operating in the naturally aspirated mode.

Operation of the purge system is controlled by a solenoid valve connected electrically to the dump valve vacuum switch and a temperature switch in the thermostat housing (except cars produced to a Middle East and Taiwan specification) and by a purge control valve connected to the engine management system ECU. The solenoid prevents purge flow at idle speed, low engine temperatures (where necessary), and under boost operating conditions.

The purge control valve regulates the purge flow rate depending on engine operating conditions. It receives a duty cycle signal from the engine management system ECU which is programmed with purge control characteristic data (see fig. G3-4). The duty cycle signal varies between 0% and 100% according to engine speed and load.

Fuel evaporative emission control system – To leak check

Whenever the various pipes, hoses, and components of the fuel evaporative emission control system are disturbed, the system should be checked for leaks upon assembly.

To test the system proceed as follows.

1. Withdraw the hose from the fuel tank side of the control valve and connect it to the test equipment shown in Section G2, figure G2-5.
2. Apply air pressure to the fuel tank hose via the test equipment. Apply pressure until a reading of 380 mm (15 in) H_2O is attained and then close the pressure supply.
3. After five minutes again check the pressure reading. The reading should not have fallen by more than 12,7 mm (0.50 in).
4. If the pressure drop is more than 12,7 mm (0.50 in) progressively treat all joints in the system with a soap solution to detect leaks.
5. Rectify leaks and again 'leak check' the system.
6. During the five mintues leak down, visually inspect the hoses, pipes, and connections that are routed under the car. Commence where the hose exits from the body at the rear and follow the system towards the control canister.

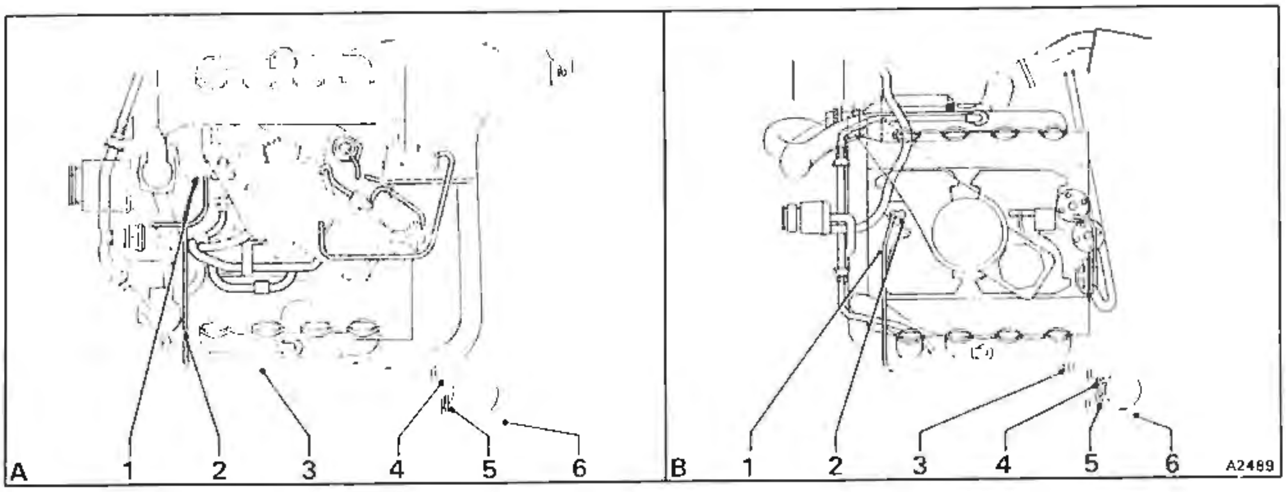

Fig. G3-2 Fuel evaporative emission control system – Engine details

A Naturally aspirated engines
1 Manifold connection
2 Restrictor
3 Purge line
4 Control solenoid
5 Fuel tank vent valve
6 From the fuel tank

B Turbocharged engines
1 Purge line
2 Manifold connection
3 Control solenoid
4 Purge valve
5 Fuel tank vent valve
6 From the fuel tank

Ensure that the hoses are secure in the mounting clips.

7. When the system has been satisfactorily checked, detach the test equipment and connect the hose to the control canister.

Fuel tank pressure control valve

The fuel tank pressure control valve is situated in the fuel tank vent line just prior to the emission control canister.

Its purpose is to seal the majority of the fuel vapours in the fuel tank and vent line until the vapour pressure rises above a predetermined level.

The valve is situated between two rubber hoses and should be removed by freeing the hose clips and withdrawing the valve as the assembly shown in figure G3-7 (item 3).

Servicing of the valve is not required. The following general performance from the valve is acceptable, otherwise it should be replaced.

Restriction flow and valve leakage test

1. The flow through the valve (from the tank to the canister) to be between 300 cm^3/min and 500 cm^3/min with 3,1 ± 0.1 kPa (4,5 mbar ± 0,01 mbar) applied to the tank tube.

Diaphragm leakage

2. Diaphragm leakage not to exceed 30 cm^3/min with 3,1 kPa (4,5 mbar) applied to the tank tube.

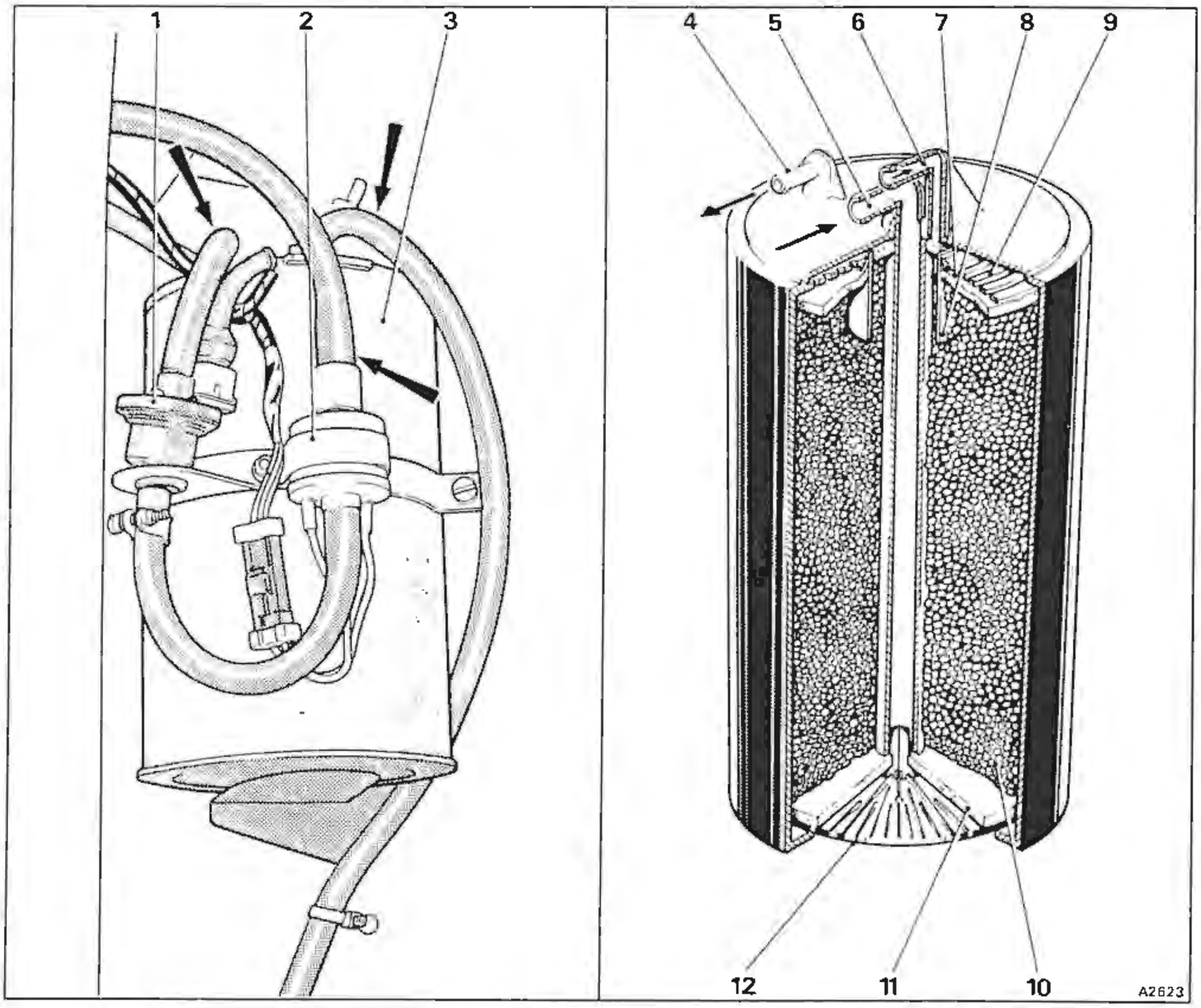

Fig. G3-3 Emission control canister

1 Purge duty cycle valve (turbocharged cars only)
2 Cut-off solenoid
3 Canister
4 Purge connection
5 Air intake
6 Tank vent connection
7 Baffle mat
8 Tank vent shroud
9 Separator grid
10 Carbon granules
11 Baffle mat
12 Base plate

Vacuum test

3. Pressure in the tank tube to be less than 1,5 kPa (2,17 mbar) with 4,2 kPa (6,1 mbar) applied to the vacuum tube and with 1600 cm³/min flow through the valve.

Purge line

The purge line connects the control canister to the engine induction system.

Air from the atmosphere is drawn downwards through the carbon granules in the canister and

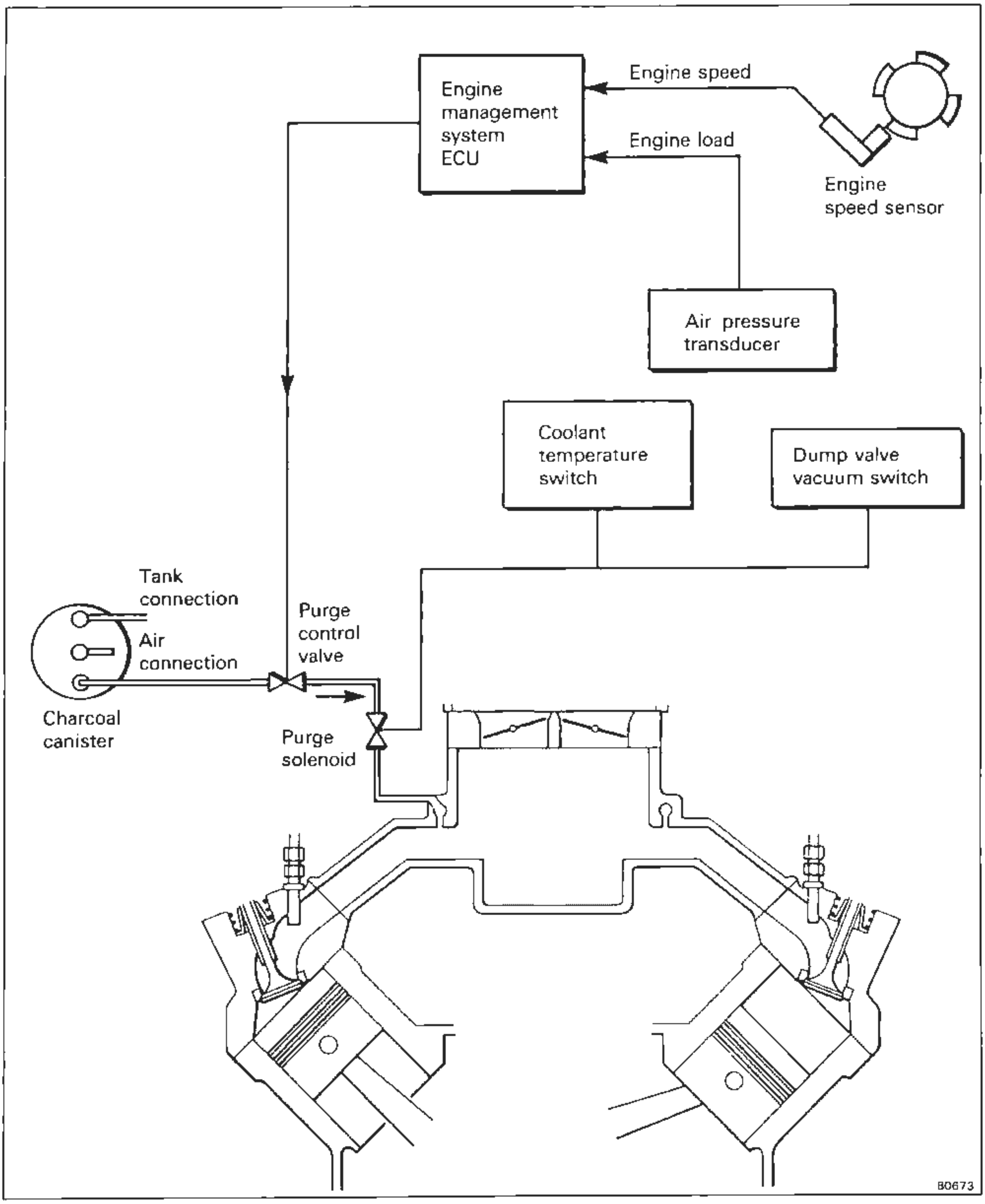

Fig. G3-4 K-Motronic ECU – Canister purge control

Figure G3-5

Purge control system – fault diagnosis chart

(Naturally aspirated engines)

Check the purge flow rate

Ignition off.
Working under the front left-hand wing remove the rear section (4 door cars) or front section (2 door cars) of the underwing sheet.
This will reveal the canister assembly.
Detach the hose from the bottom of the solenoid.
Fit an additional length of hose to the base of the solenoid.
Can you blow down the hose and through the solenoid?

NO

Investigate and rectify blocked hoses to the throttle body or renew the control solenoid (see item 7)

YES

Ignition on
Can you blow down the hose and through the solenoid?

YES

Measure the voltage on the white/purple cable at the solenoid plug and socket (see item B and 6)
Is it 12 volts?

NO

Check a. Throttle position switch and circuit
b. Temperature switch and circuit

YES

Disconnect the solenoid plug and socket
Check the black cable to earth for continuity.
Is it continuous?

YES

Replace the solenoid

NO

Rectify the fault on the black earth cable

NO

Disconnect the throttle position switch at the plug and socket (see item C and 9)
Ignition on
Can you blow down the hose and through the solenoid?

YES

Check the temperature switch circuit
Leave the throttle position switch disconnected.
Disconnect the temperature switch plug (see item D and 3).
Bridge the cables in the plug.
Ignition on
Can you blow down the hose and through the solenoid?

NO

Replace the temperature switch

YES

Unbridge the temperature switch plug
Measure the voltage on the white cable in the temperature switch plug.
Is it 12 volts?

NO

Refer to TSD 4848
Check the ignition feed white cable to fuse B3 on fuseboard 1

YES

Measure the voltage on the slate/blue cable as it enters the diode (see item F and 5)
Is it 12 volts?

NO

Check for continuity of the slate/blue cable from the diode to the temperature switch plug (see item D and 5).
This will include the 12 way connector (see item E and 2)

YES

Measure the voltage on the white/purple cable as it exits from the diode
Is it 12 volts?

NO

Replace the diode

YES

Measure the voltage on the white/purple cable at the solenoid plug and socket (see item B and 6)
Is it 12 volts?

NO

Check for continuity of the white/purple cable from the control solenoid plug and socket (see item B and 6) to either
Temperature switch circuit – The diode (see item F and 5)
The throttle switch circuit – The switch plug and socket (see item C and 9)

YES

Disconnect the solenoid plug and socket.
Check for continuity on the black cable from this plug to the engine earth point (see item G and 8)
Is it continuous?

NO

Rectify the fault on the black earth cable

YES

Replace the solenoid

NO

Detach the temperature switch plug (see item D and 3)
Ignition on
Can you blow down the hose and through the solenoid?

YES

Check the throttle switch circuit
leave the temperature switch plug disconnected.
Measure the voltage on the white cable at the throttle position switch plug and socket (see item C and 9).
Is it 12 volts?

NO

Refer to TSD 4848
Check the ignition feed white cable to fuse B3 on fuseboard 1

YES

Ensure that the throttles are closed
Measure the voltage on the blue/purple cable at the throttle position switch plug and socket
Is it 12 volts?

NO

Replace the throttle position switch

YES

Measure the voltage on the white/purple cable at the solenoid plug and socket (see item B and 6)
Is it 12 volts?

NO

Detach the temperature switch plug (see item D and 3)
Ignition on
Partially open the throttles
Can you blow down the hose and through the solenoid?

NO

Check the throttle switch circuit

YES

Control systems function satisfactorily

Cars produced to a Middle East and Taiwan specification do not have a temperature switch

Important
Before carrying out a test ensure that the following conditions apply.
1. The battery is fully charged
2. The engine is cold
3. Use a multimeter to carry out the tests
4. The ignition is switched off when either disconnecting or connecting electrical connections
5. Always remake any connections immediately a test is completed
6. Ensure that fuse B3 on fuseboard 1 is intact
7. Visually inspect the hoses for deterioration

Key

1	Fuse
2	Temperature switch plug and socket (12 way)
3	Temperature switch plug
4	Temperature switch
5	Diode
6	Solenoid plug and socket (2 way)
7	Solenoid valve
8	Engine earth point
9	Throttle position switch plug and socket (4 way)
10	Throttle position switch plug
11	Throttle position switch
●	Splice

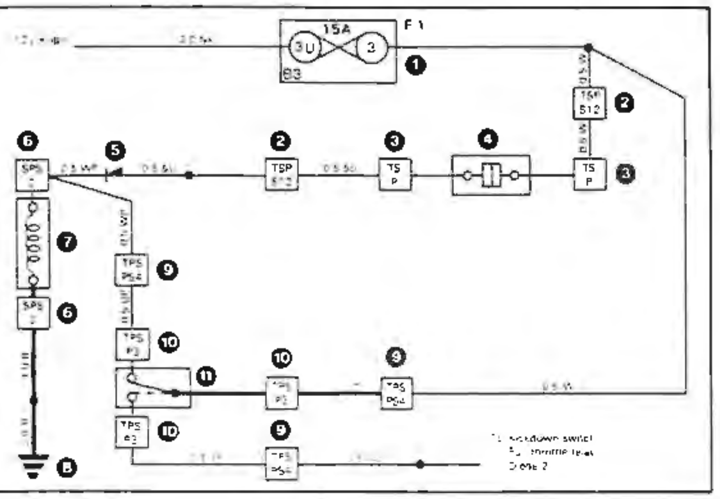

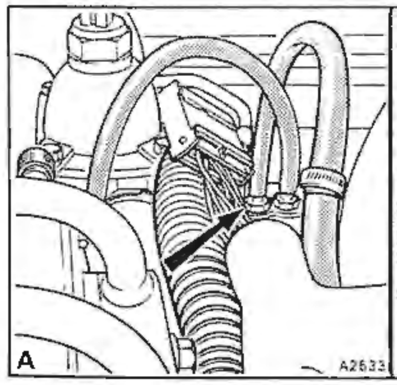

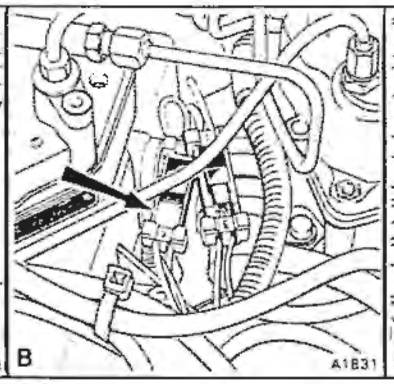

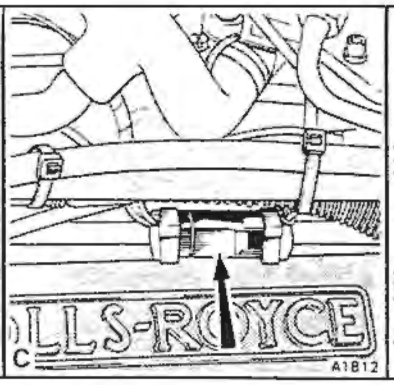

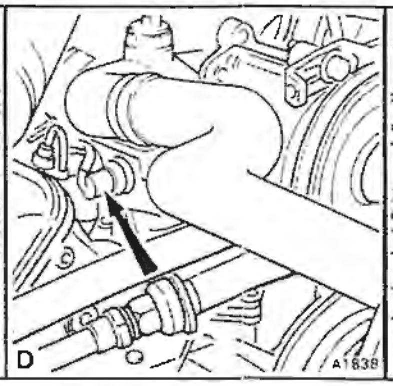

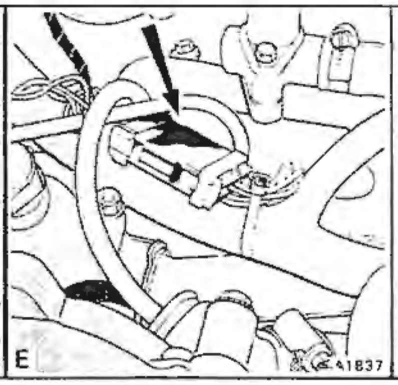

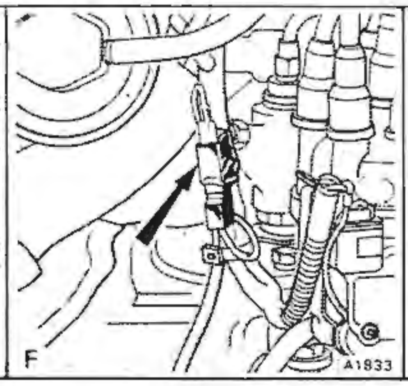

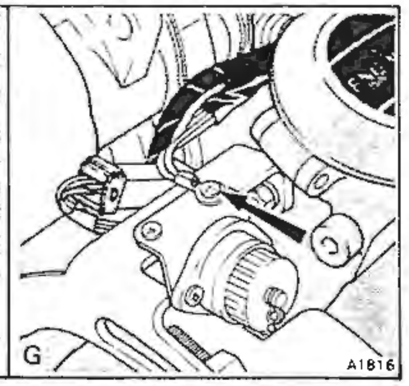

Figure G3-6

Purge control system – fault diagnosis chart (Turbocharged engines)
Sheet 1 of 2

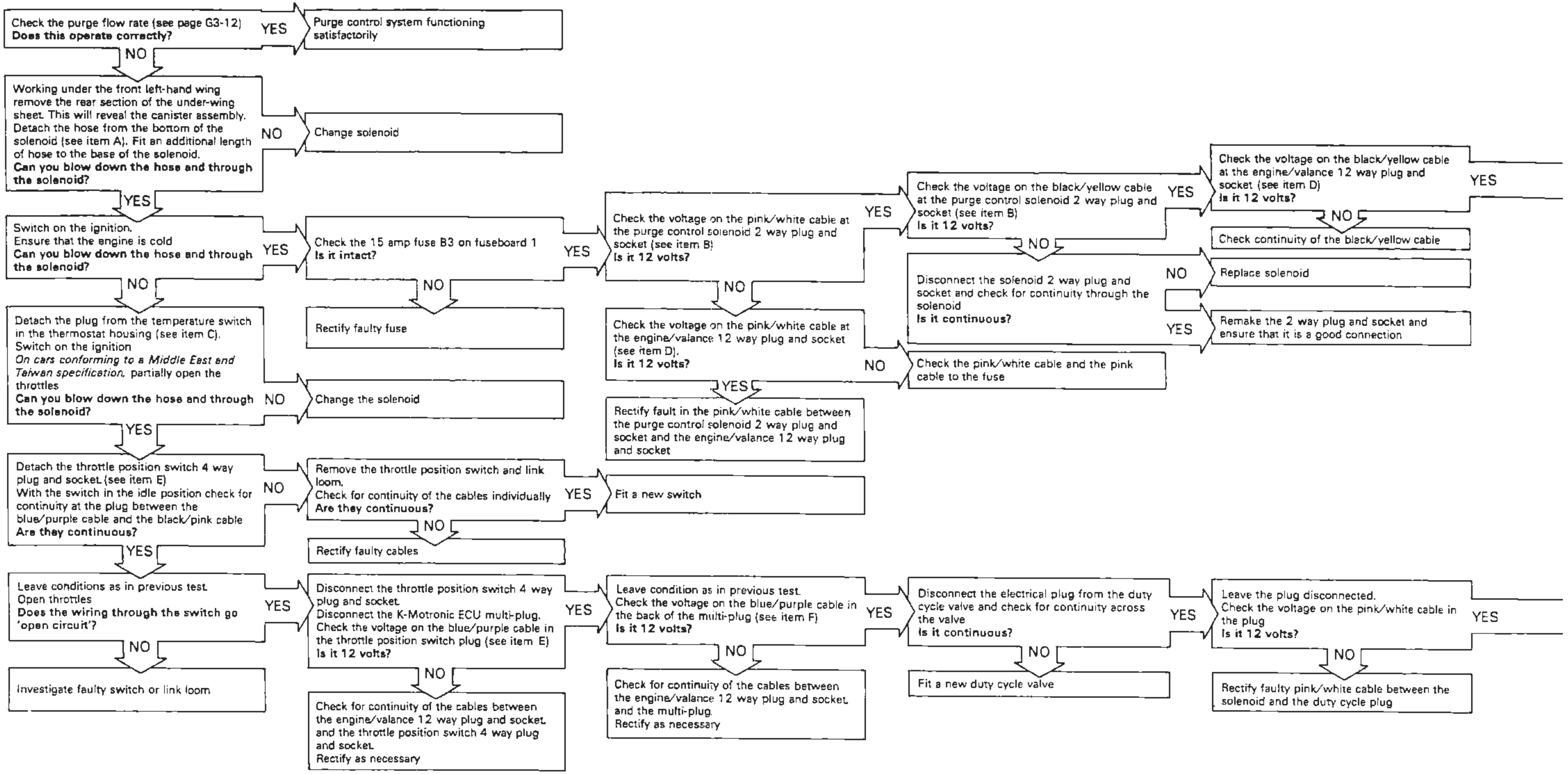

Check the purge flow rate (see page G3-12)
Does this operate correctly?

YES

Purge control system functioning satisfactorily

NO

Working under the front left-hand wing remove the rear section of the under-wing sheet. This will reveal the canister assembly. Detach the hose from the bottom of the solenoid (see item A). Fit an additional length of hose to the base of the solenoid.
Can you blow down the hose and through the solenoid?

NO

Change solenoid

YES

Switch on the ignition.
Ensure that the engine is cold
Can you blow down the hose and through the solenoid?

YES

Check the 15 amp fuse B3 on fuseboard 1
Is it intact?

YES

Check the voltage on the pink/white cable at the purge control solenoid 2 way plug and socket (see item B)
Is it 12 volts?

YES

Check the voltage on the black/yellow cable at the purge control solenoid 2 way plug and socket (see item B)
Is it 12 volts?

YES

Check the voltage on the black/yellow cable at the engine/valance 12 way plug and socket (see item D)
Is it 12 volts?

YES

NO

Check continuity of the black/yellow cable

NO

Disconnect the solenoid 2 way plug and socket and check for continuity through the solenoid
Is it continuous?

NO

Replace solenoid

YES

Remake the 2 way plug and socket and ensure that it is a good connection

NO

Check the voltage on the pink/white cable at the engine/valance 12 way plug and socket (see item D).
Is it 12 volts?

NO

Check the pink/white cable and the pink cable to the fuse

YES

Rectify fault in the pink/white cable between the purge control solenoid 2 way plug and socket and the engine/valance 12 way plug and socket

NO

Rectify faulty fuse

NO

Detach the plug from the temperature switch in the thermostat housing (see item C).
Switch on the ignition
On cars conforming to a Middle East and Taiwan specification, partially open the throttles
Can you blow down the hose and through the solenoid?

NO

Change the solenoid

YES

Detach the throttle position switch 4 way plug and socket (see item E)
With the switch in the idle position check for continuity at the plug between the blue/purple cable and the black/pink cable
Are they continuous?

NO

Remove the throttle position switch and link loom.
Check for continuity of the cables individually
Are they continuous?

YES

Fit a new switch

NO

Rectify faulty cables

YES

Leave conditions as in previous test.
Open throttles
Does the wiring through the switch go 'open circuit'?

YES

Disconnect the throttle position switch 4 way plug and socket.
Disconnect the K-Motronic ECU multi-plug.
Check the voltage on the blue/purple cable in the throttle position switch plug (see item E)
Is it 12 volts?

YES

Leave condition as in previous test.
Check the voltage on the blue/purple cable in the back of the multi-plug (see item F)
Is it 12 volts?

YES

Disconnect the electrical plug from the duty cycle valve and check for continuity across the valve
Is it continuous?

YES

Leave the plug disconnected.
Check the voltage on the pink/white cable in the plug
Is it 12 volts?

YES

NO

Rectify faulty pink/white cable between the solenoid and the duty cycle plug

NO

Fit a new duty cycle valve

NO

Check for continuity of the cables between the engine/valance 12 way plug and socket and the multi-plug.
Rectify as necessary

NO

Check for continuity of the cables between the engine/valance 12 way plug and socket and the throttle position switch 4 way plug and socket.
Rectify as necessary

NO

Investigate faulty switch or link loom

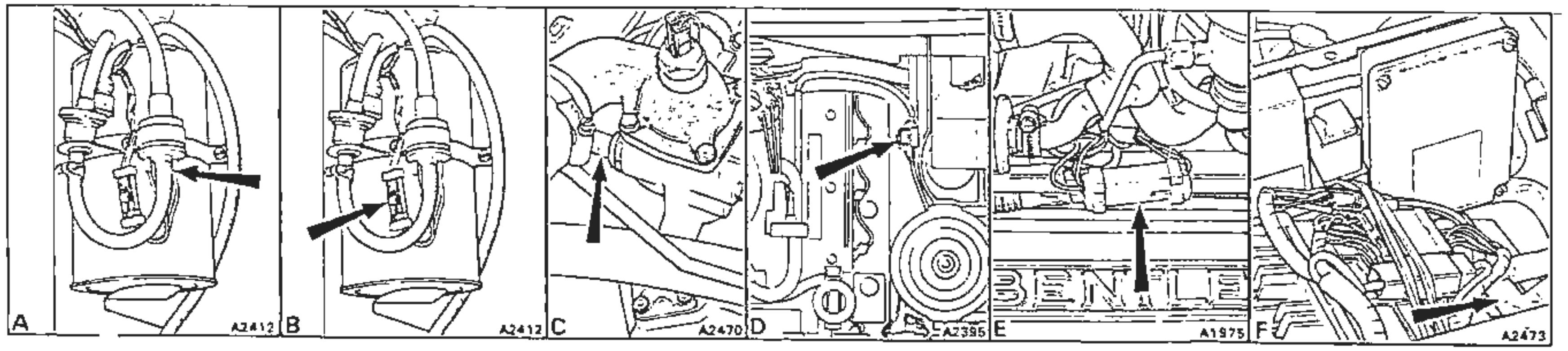

Figure G3-6

Purge control system – fault diagnosis chart (Turbocharged engines)
Sheet 2 of 2

Printed in England

Check the voltage on the yellow/black cable at thermostat/engine 12 way plug and socket
Is it 12 volts?

NO

Check for continuity of the yellow/black and the black/yellow cable between the engine/valance 12 way plug and socket, and the thermostat/engine 12 way plug and socket.
Rectify the faulty cable(s) and diode as necessary.

YES

Check the voltage on the blue cable in the thermostat/engine 12 way plug and socket
Is it 12 volts?

YES

Check the black earth cable for continuity and rectify as necessary

NO

Withdraw the plug from the thermostat housing temperature switch.
Bridge the plug contacts and then again check the voltage on the blue cable in the thermostat/engine 12 way plug and socket
Is it 12 volts?

YES

Replace thermostat housing switch

NO

Check continuity of the slate and the blue cables between the thermostat/engine 12 way plug and socket, and the thermostat switch plug

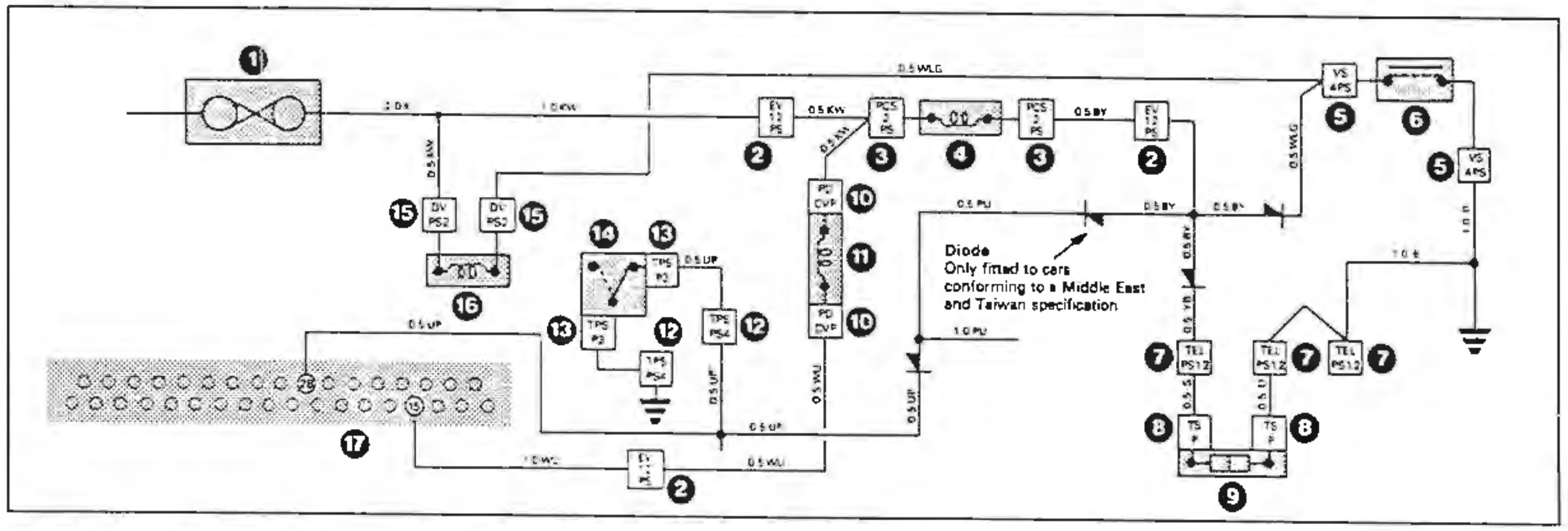

Diode
Only fitted to cars conforming to a Middle East and Taiwan specification

1 Fuse 15 amp B3 F1
2 Engine/Valance 12 way plug and socket
3 Purge cut-off solenoid 2 way plug and socket
4 Purge cut-off solenoid valve
5 Vacuum switch 4 way plug and socket
6 Dump valve vacuum switch
7 Thermostat/Engine loom plug and socket 12 way
8 Temperature switch plug
9 Temperature switch
10 Purge duty cycle control valve plug
11 Purge duty cycle control valve
12 Throttle position switch plug and socket 4 way
13 Throttle position switch plug 3 way
14 Throttle position switch
15 Dump valve plug and socket 2 way
16 Dump valve solenoid
17 K-Motronic ECU

Disconnect the K-Motronic ECU multi-plug.
Disconnect the plug from the duty cycle valve.
Check for continuity of the white/blue cable between the duty cycle valve plug through the engine/valance 12 way plug and socket to terminal 15 in the back of the ECU multi-plug
Is it continuous?

NO

Rectify faulty cables or connections as necessary

YES

Position the multi-meter in the white/blue cable line from the duty cycle valve to the K-Motronic ECU.
Disconnect the plug from the temperature in the thermostat housing.
Start and run the engine above idle speed.
Check to ensure that the reading on the multi-meter indicates that the ECU is operating the duty cycle valve approximately in accordance with the phases quoted in Purge flow rate – To check
Does this happen?

NO

Replace the ECU

YES

System is functioning satisfactorily

Important
Before carrying out a test ensure that the following conditions apply.
1. The battery is fully charged
2. The engine is cold
3. Use a multi-meter to carry out the tests
4. The ignition is switched off when either disconnecting or connecting electrical connections
5. Always remake any connections immediately a test is completed
6. Visually inspect the system hoses for deterioration
7. Ensure fuse B3 on fuseboard 1 is intact

collects the stored fuel vapours. This mixture then passes along a hose from the purge connection on the canister via a cut-off solenoid and restrictor (naturally aspirated cars) or duty cycle purge control valve (turbocharged cars) into the induction manifold.

Operation of the purge system is controlled by the solenoid valve that cuts out the purge flow until a predetermined coolant temperature is reached. On turbocharged cars the solenoid also cuts out the purge flow under boost operating conditions. On naturally aspirated cars and turbocharged cars (without catalytic converters) the solenoid also cuts out the purge flow at idle.

Emission control canister (see fig. G3-3)
The evaporative emission control canister is mounted under the left-hand front wing.

The canister is a cylindrical container filled with activated carbon granules. The top of the canister incorporates a tube, open to atmosphere to admit purge air, together with fuel tank vent and purge connection pipes.

At the mileage specified in the service schedules, remove the control canister and fit a new assembly.

Emission control canister – To remove and fit

1. Locate the emission control canister by removing the appropriate underwing sheet, as follows.

4 door cars –	The canister is located behind the front left-hand wheel. Remove the rear section of the underwing sheet.
2 door cars –	The canister is located in front of the front left-hand wheel. Remove the forward section of the underwing sheet.

2. The underwing sheet can be withdrawn once the self-tapping screws, situated around the edge of the sheet have been removed.
3. Detach the hoses arrowed in figure G3-3. Label each hose to facilitate identification.
4. On turbocharged cars, disconnect the electrical plug to the duty cycle purge valve.
5. Disconnect the 2-way electrical plug and socket to the solenoid valve.
6. Note the position of the canister and its connections in relation to the various hoses, brackets, and clamping ring.
7. Unscrew the mounting clamp ring securing screw and carefully manoeuvre the canister from its position.
8. Fit the canister to the vehicle by reversing the procedure given for removal.

Fuel tank vent
The fuel tank is vented to the filler neck via two connections. This allows adequate venting of the tank during filling.

A separate vapour line from the centre of the tank (the rollover tube) almost encircles the tank before passing via the vent line and fuel tank pressure control valve to the evaporative loss control canister.

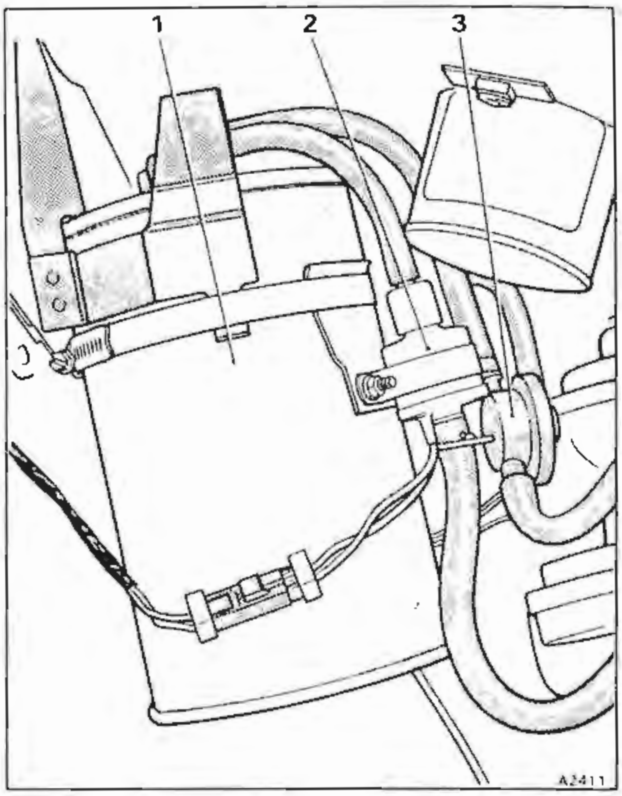

Fig. G3-7 **Canister installation – 2 door cars**
1 Canister
2 Cut-off solenoid
3 Pressure control valve – fuel tank vent

The vent line is situated under the floor of the car on the left-hand side as shown in figure G3-1. It includes a restrictor at its highest point and passes around the tank to prevent liquid fuel from entering the vent line during harsh manoeuvres or in the event of vehicle inversion.

In the event of a blockage in the vapour line to the control canister, a combined pressure and vacuum relief valve is incorporated into the fuel filler cap. The valve prevents an excessive pressure build-up in the fuel tank caused by fuel vaporization or vacuum as the fuel is consumed.

The fuel tank pressure control valve regulates the release of fuel vapour from the tank vent line to the canister. The valve only opens to allow vapour to pass when the pressure in the tank exceeds the valve setting.

For all other details of the fuel tank refer to Chapter C, Fuel system.

On naturally aspirated cars the flow rate is controlled by a restrictor but on turbocharged cars it is controlled by a purge control valve. This valve regulates the purge flow rate depending upon the engine operating conditions. It receives a duty cycle signal from the engine management system ECU which is programmed with purge control characteristic data.

Purge flow rate — To check

Naturally aspirated cars

1. Fit the flowmeter RH 8725 into the purge line at the restrictor, leaving the restrictor in the hose from the canister.
2. Start and run the engine until normal operating temperature is attained.
3. Increase the engine speed to 2500 rev/min by opening the throttles.
4. Check the purge flow rate is between 26,0 litres/min and 33,0 litres/min (55 ft^3/h and 70 ft^3/h), except on 1987/88 model year cars for the Middle East or Taiwan when the purge flow rate should be between 9,4 litres/min and 18,8 litres/min (20ft^3/h and 40 ft^3/h).

Turbocharged cars

1. Connect the flowmeter RH 8725 into the purge line between the induction manifold and the purge control duty cycle valve.
2. Start and run the engine until normal operating temperature is attained. Stop the engine.
3. To carry out the test start the engine and run at idle speed.
4. Note that the purge control system has three phases of operation, as follows.

Phase 1 – 90 seconds delay before purge after starting the engine.
Phase 2 – 150 seconds active purge.
Phase 3 – 15 seconds interval with no purge to allow the lambda pre-control system (if fitted) to learn previous purge/driving cycles.

Continued engine operation results in alternating Phases of 150 seconds active purge and 105 seconds no purge (phases 1 and 3 = 90 seconds + 15 seconds).

Note Operation 4 does not apply to turbocharged cars fitted with a fuel evaporative emission control system that are produced to a Middle East or Taiwan specification.

5. Increase the engine speed to 2000 ± 50 rev/min by opening the throttles.
6. Check that the purge flow rate is between 53 ft/h and 106 ft^3/h (25 litres/min and 50 litres/min), in the 150 seconds active purge phase (refer to Operation 4).

All cars

If the flow is less than the minimum, check for the following.

1. Leak in hoses/pipes.
2. Blockage in hoses/pipes.
3. Control system malfunction.

If the flow is in excess of the maximum, check for the following.

1. Excessively lean mixture strength.
2. Air leak between the throttle body and the induction manifold.

Chapter H

Crankcase emission control system

Contents	Sections Rolls-Royce Silver Spirit	Silver Spur	Corniche / Corniche II	Bentley Eight	Mulsanne / Mulsanne S	Turbo R	Continental
Contents and issue record sheet	H1	H1	H1	H1	H1	H1	H1
1987/88/89 model years							
Crankcase emission control system	H2	H2	H2	H2	H2	H2	H2

Printed in England

Issue record sheet

The dates quoted below refer to the issue date of individual pages within this chapter.

Sections	H1	H2								
Page No.										
1	5/88	5/88								
2		5/88								
3	5/88	5/88								
4										
5		5/88								
6										
7										
8										
9										
10										
11										
12										
13										
14										
15										
16										
17										
18										
19										
20										
21										
22										
23										
24										
25										
26										
27										
28										
29										
30										
31										
32										
33										
34										
35										
36										
37										
38										
39										
40										
41										
42										
43										
44										
45										
46										
47										
48										
49										
50										
51										
52										
53										
54										

Printed in England

Crankcase emission control system

Crankcase emissions are controlled by a closed breather system (see figs. H2-1 and H2-2).

The purpose of the system is to maintain a depression in the crankcase under all operating conditions. To achieve this, crankcase emissions (engine blow-by) are drawn from a connection on the engine oil filler and pass, via a flame trap in the breather housing, into the induction system where they mix with the inlet charge of fuel and air. Once in the induction system the gases are drawn in to the combustion chambers and finally burnt in the engine.

The breather housing has two inlet elbows and two outlet connections. A wire mesh flame trap is situated inside the housing, immediately behind the inlet elbow from the crankcase.

The crankcase is connected to the breather housing from the front of 'B' bank cylinder head via the oil filler (which has a sealed cap). This inlet elbow is connected inside the breather housing, to the air intake duct connection.

The second inlet elbow connects the auxiliary air valve or idle speed actuator to the breather housing. This connection conveys air to the cold start injection galleries in the induction manifold, via a second outlet connection.

Both inlet elbows are connected inside the housing by a small diameter hole.

Naturally aspirated cars
Under normal operating conditions, except when on full throttle, crankcase emissions (engine blow-by) flow from the oil filler via a moulded rubber hose to the breather housing. They are then drawn through the small internal connecting (metering) orifice, into the induction manifold.

When approaching full throttle conditions, manifold depression decreases and the crankcase emissions are drawn from the breather housing to the air intake duct. This is due to the increasing depression created by the air cleaner and associated ducting.

A depression is therefore maintained within the crankcase under all normal operating conditions.

Turbocharged cars
With the system fitted to turbocharged engines the breather housing is more complex. The system has to function with either a depression or when under boost conditions, a pressure existing in the induction manifold.

The basic connections and operation when a depression exists in the induction manifold are very similar for both systems. However, during boost conditions two metal disc valves and a rubber diaphragm control and direct the flow of the crankcase emissions (see fig. H2-5).

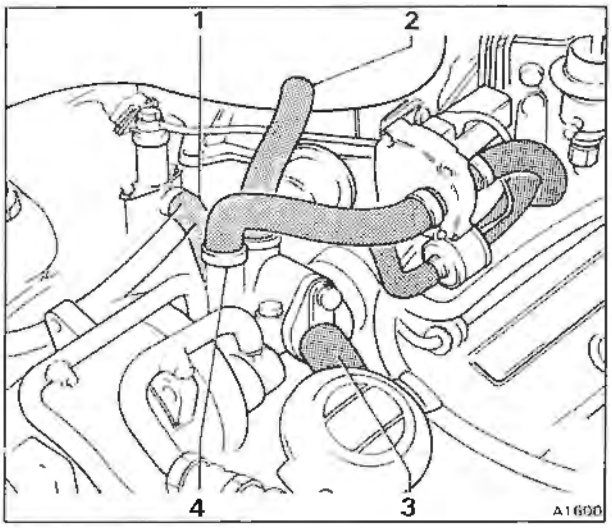

Fig.H2-1 **Crankcase emission control system – hose connections (naturally aspirated cars)**
1 To induction manifold
2 To air intake duct
3 From oil filler
4 From auxiliary air valve

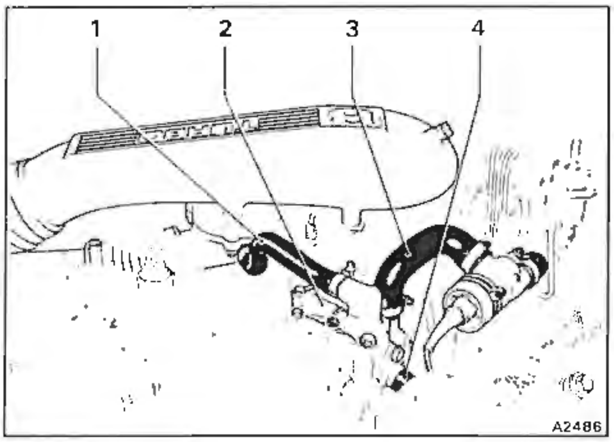

Fig.H2-2 **Crankcase emission control system – hose connections (1989 model year turbocharged cars)**
1 To air intake ducting
2 To induction manifold
3 From idle speed actuator
4 From oil filler

Breather housing – To service
At the mileage/time interval specified in the service schedules, the gauze flame trap (situated behind the

inlet elbow from the oil filler) should be removed and cleaned as follows.

1. Withdraw the starter relay.
2. Unscrew the setscrew retaining the inlet elbow to the housing.
3. Ease the flange from the housing, noting that a slight resistance may be encountered due to the rubber sealing ring located on the elbow spigot.
4. Insert a small pointed instrument into the gauze and carefully lever the flame trap from the housing.
5. Wash the components in methylated spirit and dry with compressed air.
6. Visually inspect the gauze for damage. If it appears serviceable, fit it into the housing and assemble the remaining parts by reversing the dismantling procedure.

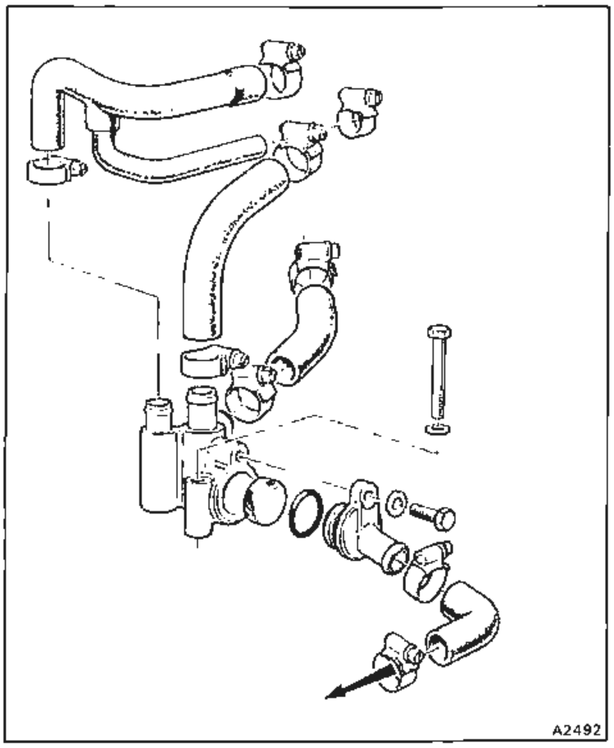

Fig. H2-3 Crankcase breather (naturally aspirated cars)

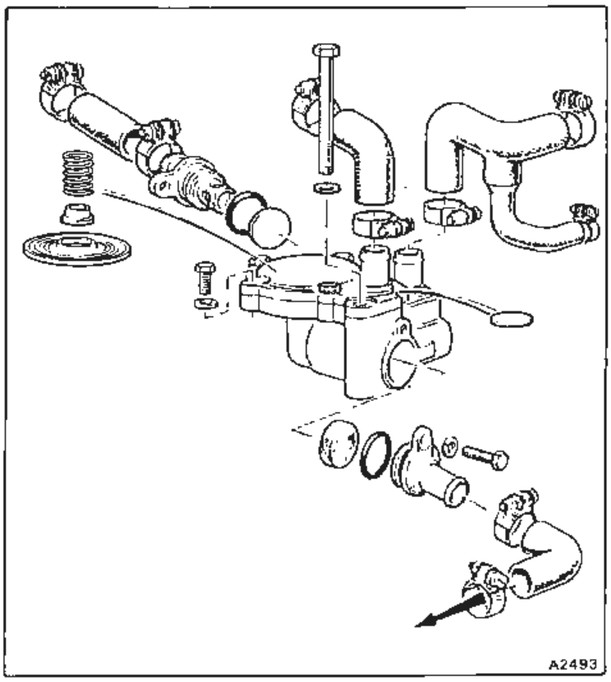

Fig. H2-4 Crankcase breather (turbocharged cars)

Breather housing – To overhaul

Complete overhaul of this assembly is only envisaged at very high mileages or in the event of a system malfunction. On these occasions proceed as follows.

All cars

1. Withdraw the starter relay.
2. Slacken the worm drive clips or remove the securing bands on the hoses leading to the breather housing. Label each hose for identification and free each joint.
3. Unscrew the two setscrews securing the breather housing to the engine. Withdraw the assembly.
4. Slacken the remaining four worm drive clips or remove the securing bands, free the joints and withdraw the hoses. Examine the hoses for serviceability and clean as necessary using either soap and water or methylated spirit. If the hoses have covered a high mileage and/or show signs of deterioration they should be discarded and new parts fitted.
5. Unscrew the setscrew retaining the inlet elbow to the housing. Ease the flange from the housing, noting that a slight resistance may be encountered due to the rubber sealing ring situated on the spigot.
6. Insert a small pointed instrument into the gauze and carefully lever the flame trap from the housing.

Turbocharged engines

7. Repeat Operation 5 on the connection to the induction manifold.
8. Collect the metal disc valve situated behind the flange.
9. Unscrew and remove the five small setscrews situated around the top of the assembly.
10. Withdraw the top and collect the spring, guide washer, and diaphragm.
11. Collect the metal disc valve from the smaller chamber located above the aperture for the flame trap.

All cars

12. Wash all parts in clean methylated spirit and examine them for serviceability, particularly the rubber sealing ring(s) and diaphragm (if fitted).

If the rubber parts have covered a high mileage and/or show signs of deterioration, they should be renewed.

13. Assemble the breather housing and fit it to the engine by reversing the dismantling procedure.

Figure H2-5

Crankcase breather housing – turbocharged engines

Printed in England

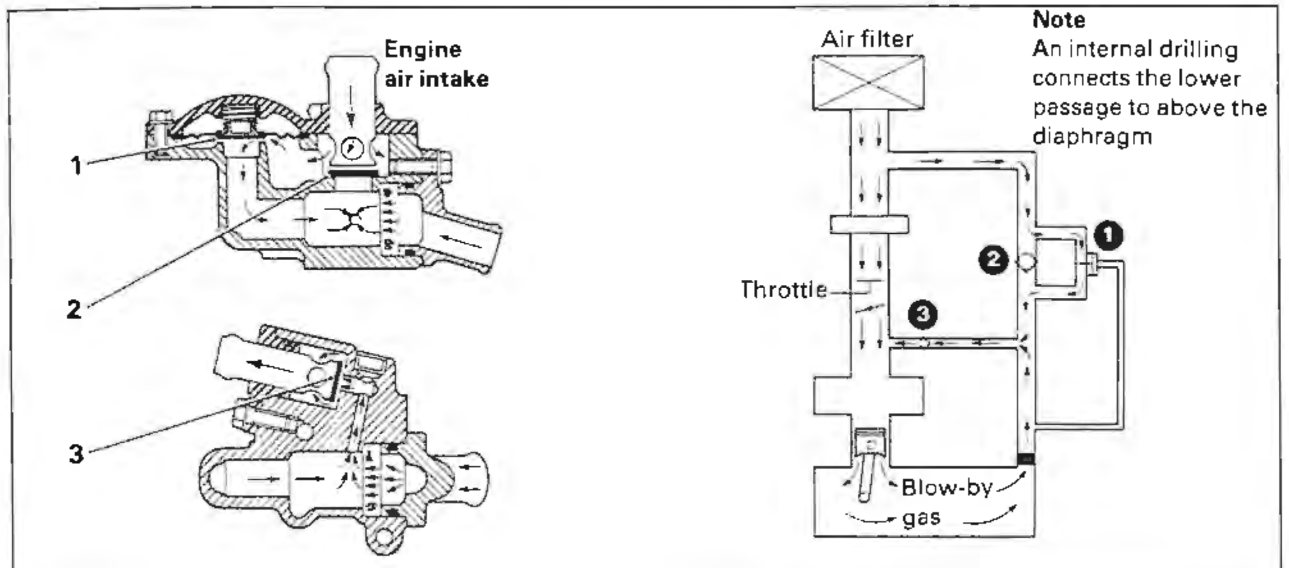

Note
An internal drilling connects the lower passage to above the diaphragm

Airflow at idle and low power output

Airflow at idle and low power output

Under these conditions a large depression in the induction manifold draws blow-by gas from the crankcase via a calibrated restrictor. This signal is also communicated via internal drillings to the chamber above the diaphragm valve (1).

When the crankcase depression increases to a predetermined level [101,60 mm (4.0 in) H_2O] the signal raises the diaphragm from its seat. This opens a passage for filtered engine intake air to by-pass the valve disc (2) and combine with the crankcase blow-by gas. Thus the mix or ratio of intake air to blow-by gas maintains the correct crankcase depression.

A summary is that disc valve 3 is fully open, disc valve 2 is fully closed and diaphragm valve 1 does not oscillate but stabilizes during steady state engine conditions at a position where it maintains the correct manifold depression.

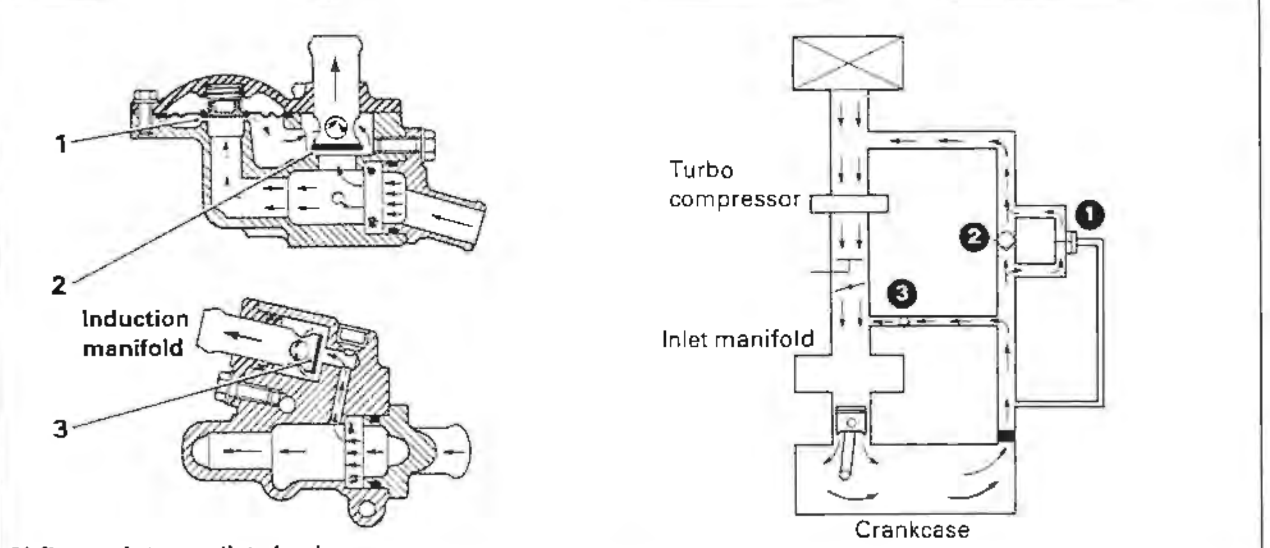

Airflow at intermediate load

Airflow at intermediate load

The intermediate load illustration is theoretical and will not normally happen as shown. A combination of events is illustrated whereas in practice these will rarely happen together.

Due to the depression in the induction manifold valve disc 3 is open and blow-by gas will flow from the crankcase, through the restrictor passage, into the manifold.

The diaphragm valve compares the depression in the crankcase with that after the air intake filter. The air filter depression is negligible and therefore valve disc 2 is closed, unless the airflow through the restrictor becomes less than the amount of blow-by (i.e. the crankcase pressure tends towards atmospheric) when disc valve 2 will open. Blow-by will then also pass to the engine air intake and crankcase depression will be controlled.

If the crankcase depression is greater than [101,60mm (4.0in) H_2O] (valve disc 2 will be closed) the diaphragm lifts off its seat to control the crankcase depression and provide an additional route for the blow-by gas.

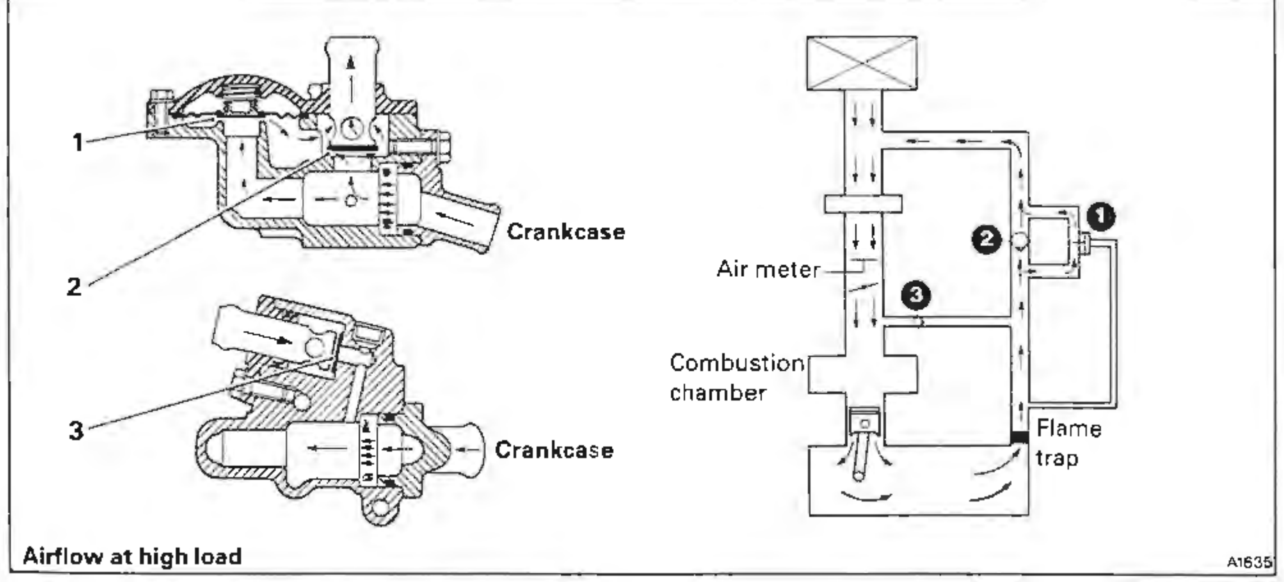

Airflow at high load

Airflow at high load

At high loads the induction manifold is under boost conditions hence valve disc 3 is forced to close off the restrictor passage.

Valve disc 2 is sucked open due to the depression behind the air filter.

The engine breathes by drawing the blow-by gas from the crankcase through the breather housing and into the engine air intake ducting. In this condition the crankcase depression is solely controlled by the depression after the air filter.

At crankcase depressions greater than 101,60 mm (4.0 in) H_2O the diaphragm lifts off its seat and provides an additional minor route for the blow-by gas to pass on its way to the engine air intake ducting.

Crankcase depression – To check

1. Remove the engine dipstick.
2. Connect a water manometer via a suitable hose to the dipstick tube.
3. Start and run the engine at idle speed.
4. Check the reading on the manometer which should be as follows.

Naturally aspirated engines – manometer reading showing a slight depression.

Turbocharged engines – manometer depression reading should be between 101,6 mm H_2O and 152,4 mm H_2O (4.0 in H_2O and 6.0 H_2O).

Chapter J

Air intake system

Printed in England

Issue record sheet

The dates quoted below refer to the issue date of individual pages within this chapter.

Sections	J1	J2	J3							
Page No.										
1	5/89	10/86	5/88							
2		10/86	5/88							
3	5/89	10/86	5/88							
4		10/86								
5										
6										
7										
8										
9										
10										
11										
12										
13										
14										
15										
16										
17										
18										
19										
20										
21										
22										
23										
24										
25										
26										
27										
28										
29										
30										
31										
32										
33										
34										
35										
36										
37										
38										
39										
40										
41										
42										
43										
44										
45										
46										
47										
48										
49										
50										
51										
52										
53										
54										

Printed in England

Air intake system

The air intake system (see figs. J2-1 and J2-3) is similar for both naturally aspirated and turbocharged engines.

Air enters the system behind the right-hand side of the front bumper and is conveyed, by a plastic ducting, into the lower half of the filter housing. The housing is located inside the engine compartment at the forward end of the wing valance.

The air is drawn upwards through the filter element situated in the top cover of the housing. It then travels via further ducting and a turbocharger assembly (if fitted), through the cast aluminium alloy intake elbow and on to the air meter housing.

Naturally aspirated engines have a black plastic diffuser fitted into the ducting in front of the cast aluminium intake elbow. This is to eliminate the resonance or noise generated within the system at low engine speeds.

An air bleed is situated in the rear face of the ducting just prior to the intake system entering the filter housing. The purpose of this is to ensure that the engine will continue to run should the main intake become temporarily blocked.

A connection moulded into the side of the filter housing is used to vent the air injection system into the air intake system. On engines not fitted with an air injection system this connection remains blanked.

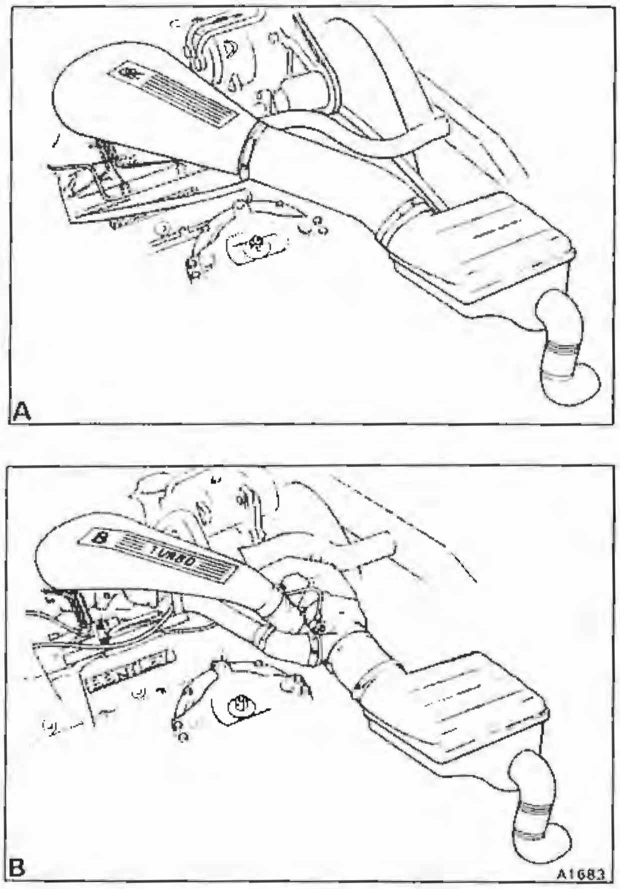

Fig. J2-1 Air intake system
A Naturally aspirated
B Turbocharged

Air filter element – To remove and fit

1. Release the six retaining clips and withdraw the top cover from the air filter housing.

On Corniche/Continental cars, unscrew the two setscrews securing the filter housing to the valance. Move the assembly further into the engine compartment to allow access to the retaining clips.

2. Turn the top cover as shown in figure J2-2.
3. Withdraw the filter element, taking note of its location in the top cover.
4. Ensure that the housing is clean, then fit the new element into the top cover. Ensure that the seal around the element seats correctly in the top cover recess.
5. Carefully replace the top cover onto the main housing and secure with the retaining clips.

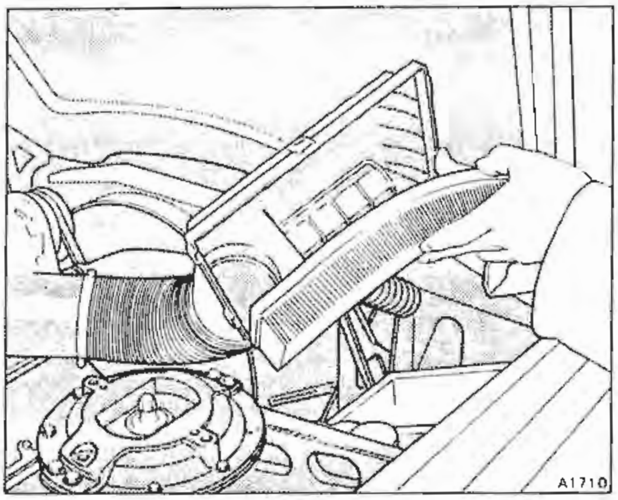

Fig. J2-2 Renewing the air filter element

Air filter housing – To remove and fit (see fig. J2-3)

Always blank any open connections as soon as possible to prevent the ingress of foreign matter.

1. From inside the engine compartment, unscrew the worm drive clip securing the main intake hose to the housing. Free the joint and remove the hose.
2. Remove the right-hand front flasher lamp and through the resulting aperture, unscrew the worm drive clip securing the underwing ducting to the side of the housing. Free the joint and move the ducting.

Printed in England

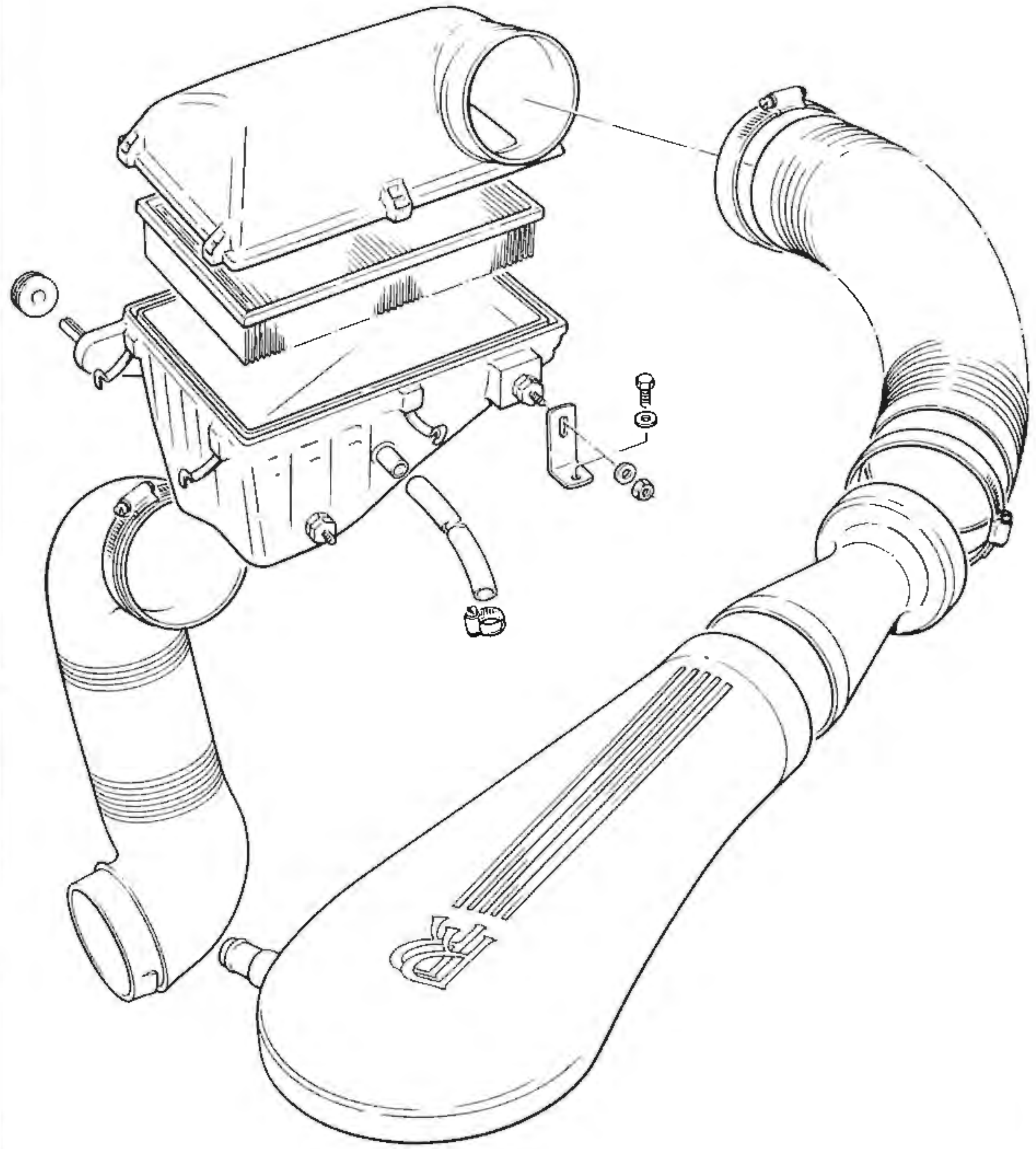

Fig. J2-3 **Air intake system and associated components (Naturally aspirated engines)**

This operation is not required on Corniche/ Continental cars.

3. If the engine is fitted with an air injection system, detach the vent hose from the side of the housing.
4. Slacken the nuts retaining the mounting brackets to the housing.
5. Unscrew the setscrews securing the mounting brackets to the wing valance.
6. Withdraw the filter housing.
7. Fit the filter housing by reversing the removal procedure, noting the following.
8. If an air injection system is fitted, ensure that the small blank in the side of the housing is removed.
9. Ensure that the two mounting grommets situated in the valance are in good condition.

Intake elbow – To remove and fit

The cast aluminium alloy intake elbow connects the flexible ducting of the air intake to the air meter on the mixture control unit.

1. Unscrew the worm drive clips securing the following.
   a) Main intake hose to the elbow.
   b) Hose from the breather housing pipe to the intake elbow
   c) Return hose from the dump valve connection (turbocharged engines only).
2. Free each hose from its connection.
3. As the main hose is removed from the intake elbow, collect the diffuser (naturally aspirated engines only).
4. Unscrew the two setscrews securing the intake elbow to the mixture control unit (see fig. J2-5).
5. Withdraw the elbow.
6. To fit the elbow, reverse the dismantling procedure, noting that the rubber sealing ring inside the elbow is in good condition.

Intake ducting – To remove and fit

The ducting can be divided into two sections, namely the engine compartment ducting and the underwing ducting.

If work is necessary to the engine compartment ducting, removal and fitting is straightforward as it is retained by worm drive clips.

If work is required on the underwing section, note that the top of the plastic moulding is secured by a worm drive clip and that the bottom clips through the front wing.

Removal of the underwing section (see fig. J2-4) will depend upon the condition of the front wing.

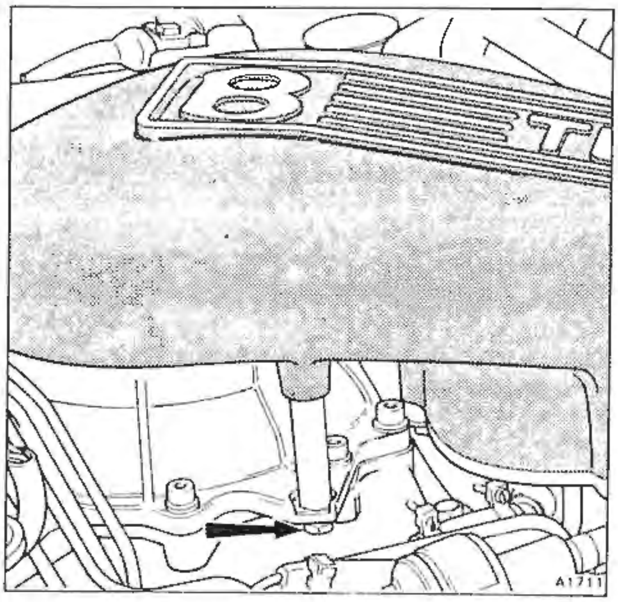

Fig. J2-5 Removal of the air intake elbow

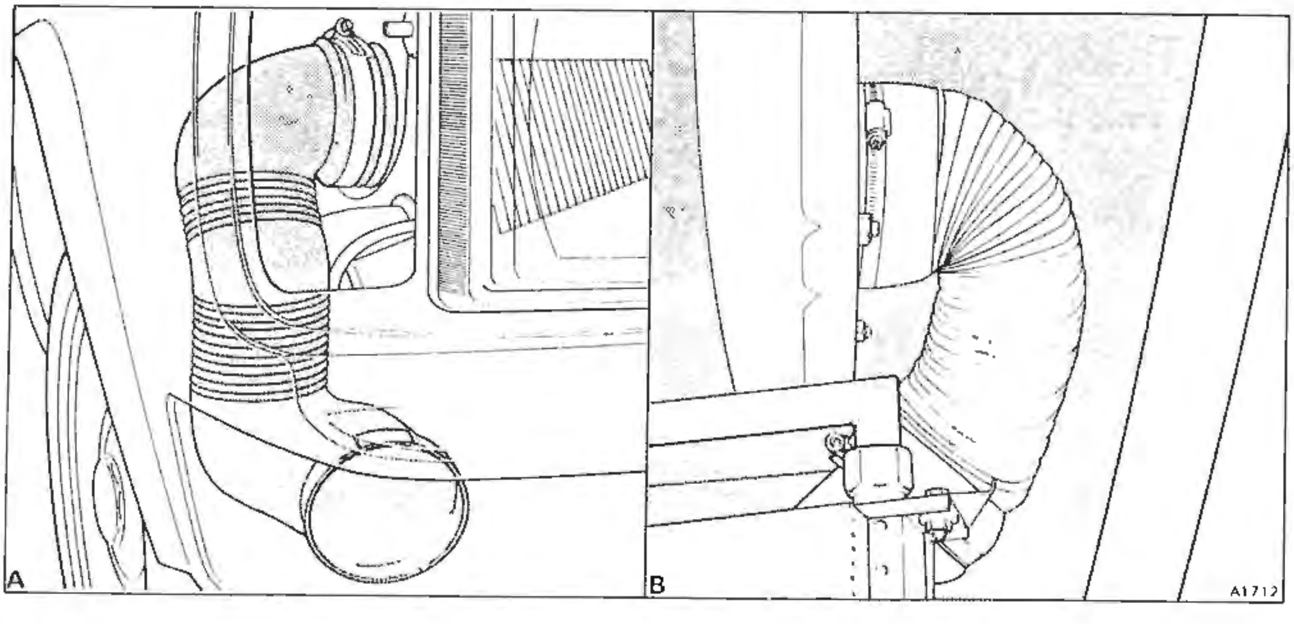

Fig. J2-4 Underwing ducting
A 4 door cars
B 2 door cars

However, it will normally be necessary to remove the snow tray, flasher lamp, front bumper and on turbocharged cars the air dam. Finally, it will be necessary to remove the headlamps washer reservoir securing nuts and bolts, so that the assembly can be moved sideways to accommodate the movement of the ducting.

On Corniche/Continental cars, the underwing section is a convoluted hose secured by worm drive clips. To gain access, remove the front underwing sheet.

Air intake system

The air intake system comprises an air filter element which is installed in a housing on the top of the right-hand front inner wing (see fig. J3-1).

Ambient air is ducted from behind the front bumper into the bottom of the filter housing. The air is then drawn upwards through the filter element (dirty side of the element will be facing downwards) and passes along flexible ducting to the turbocharger compressor inlet.

Compression of the intake air results in an increase in air temperature. Therefore, a charge air intercooler has been incorporated to reduce the

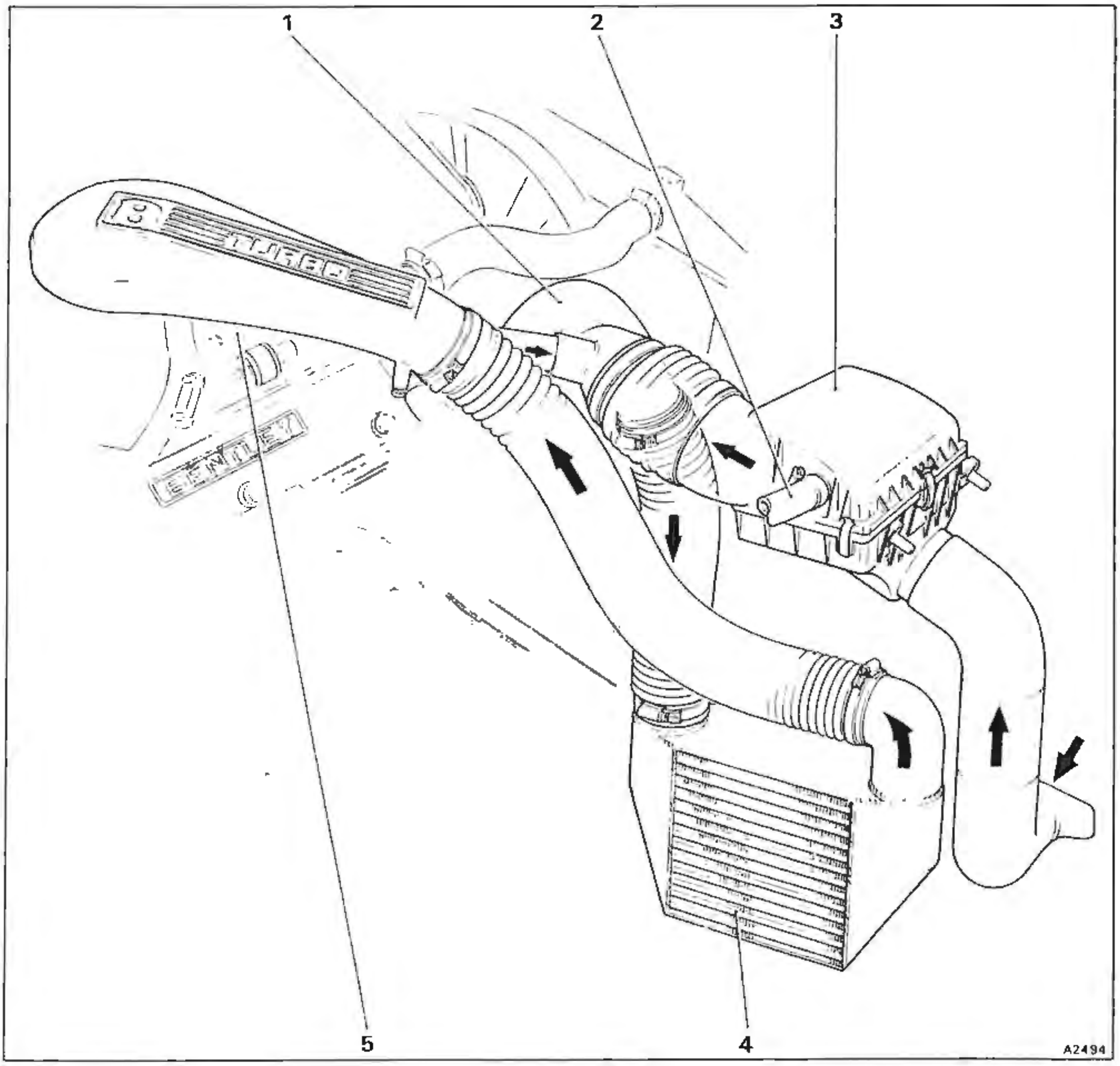

Fig.J3-1 **Air intake system**
1 Turbocharger assembly
2 Air injection system feed hose
3 Air filter housing
4 Intercooler assembly
5 Dump valve assembly

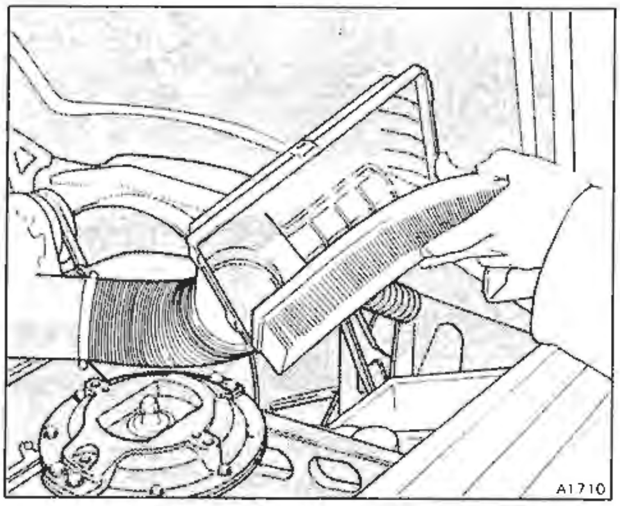

Fig.J3-2 Renewing the air filter element

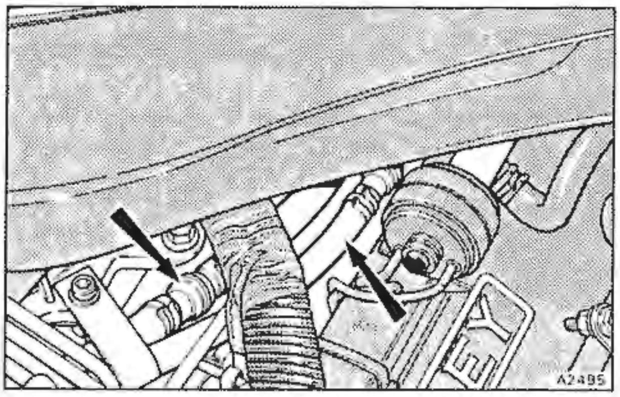

Fig. J3-3 Dump valve signal hoses

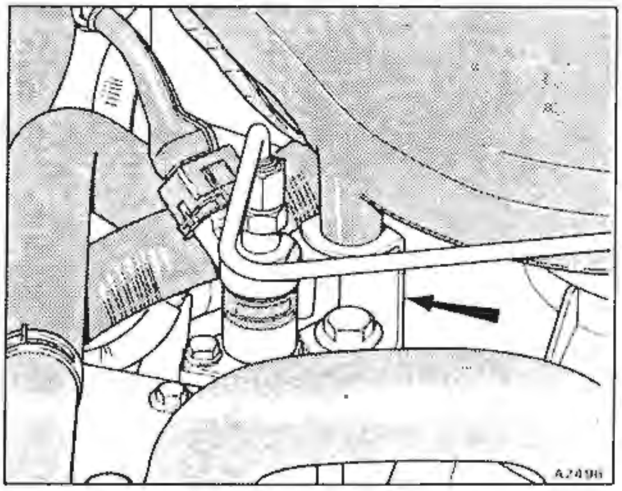

Fig. J3-4 Removal of the air intake elbow

compressor outlet air temperature and avoid a reduction in the density of air supplied to the engine.

The air to air intercooler is mounted below the air cleaner in the ambient air stream under the front bumper.

The cooled charge air then passes along flexible ducting, through the cast air intake elbow and into the air meter housing.

At low engine speeds and loads, the vacuum operated dump valve opens and allows a proportion of the inducted air to return to the inlet side of the turbocharger compressor.

When increased engine performance is required, the dump valve closes so that the inducted air is pressure fed to the engine.

Air filter element – To remove and fit

1. Release the six retaining clips and withdraw the top cover from the air filter housing.
2. Turn the top cover as shown in figure J3-2.
3. Withdraw the filter element, taking note of its location in the top cover. Ensure that the seal around the element seats correctly in the top cover recess.
4. Carefully replace the top cover onto the main housing and secure with the retaining clips.

Air filter housing – To remove and fit

Always blank any open connections as soon as possible to prevent the ingress of foreign matter.

1. Remove the right-hand front underwing sheet and through the resulting aperture, unscrew the worm drive clip securing the underwing ducting to the side of the housing. Free the joint and withdraw the ducting.
2. From inside the engine compartment, unscrew the worm drive clip securing the main intake hose to the housing. Free the joint and detach the hose.
3. If the engine is fitted with an air injection system, detach the hose from the rear of the housing.
4. Slacken the nuts retaining the mounting brackets to the wing valance.
5. Unscrew the setscrews securing the mounting brackets to the wing valance.
6. Withdraw the filter housing.
7. Fit the filter housing by reversing the removal procedure, noting the following.
8. Ensure that the two mounting grommets situated in the valance are in good condition.
9. If an air injection system is fitted, ensure that the small connection in the rear of the housing is clear. Connect the small diameter air injection system feed hose to the connection and secure with a worm drive clip.

Intake elbow – To remove and fit

The cast intake elbow connects the flexible ducting of the air intake system, to the air meter on the mixture control unit.

1. Release the clips securing the following.
   a) Main intake hose to the elbow.
   b) Return hose from the dump valve connection.

c) Small diameter signal hoses to the dump valve (see fig. J3-3).

d) Hose from the breather housing pipe to the connection under the dump valve.

2. Free each hose from its connection.

3. Unscrew the two setscrews securing the intake elbow to the mixture control unit (see fig. J3-4).

4. Withdraw the elbow.

5. To fit the elbow, reverse the dismantling procedure, noting that the rubber sealing ring inside the elbow is in good condition.

Intake ducting – To remove and fit

The ducting used inside the engine compartment is of the flexible convoluted type and the intake under the front wing is a plastic moulding.

All ducting is secured to the various components by worm drive clips.

Removal of the plastic moulding under the wing will require the removal of the front underwing sheet.

Intercooler – To remove and fit

An intercooler is fitted behind the air dam on the right-hand side of the vehicle.

1. Locate the forward section of the underwing sheeting, situated under the right-hand front wheel arch.
2. Unscrew the self-tapping screws situated around the sheet.
3. Withdraw the sheet.
4. Unscrew the two nuts retaining the sheeting under the intercooler.
5. Unscrew the worm drive clips securing both the feed and return air hoses to the intercooler.
6. Unscrew the nuts that fasten the four intercooler mounting studs to the body.
7. Remove the undersheet mounting bracket from beneath the intercooler.
8. Lift the intercooler until the mounting studs just clear their respective holes and then turn the intercooler and manoeuvre it from its position.
9. Fit the intercooler by reversing the removal procedure.

Throttle linkage

Contents

Contents	Sections Rolls-Royce Silver Spirit	Silver Spur	Corniche / Corniche II	Bentley Eight	Mulsanne / Mulsanne S	Turbo R	Continental
Contents and issue record sheet	K1	K1	K1	K1	K1	K1	K1
1987/88/89 model years							
Throttle linkage	K2	K2	K2	K2	K2	K2	K2

Printed in England

Issue record sheet

The dates quoted below refer to the issue date of individual pages within this chapter.

Sections	K1	K2								
Page No.										
1	5/88	5/88								
2		5/88								
3	5/88	5/88								
4		5/88								
5										
6										
7										
8										
9										
10										
11										
12										
13										
14										
15										
16										
17										
18										
19										
20										
21										
22										
23										
24										
25										
26										
27										
28										
29										
30										
31										
32										
33										
34										
35										
36										
37										
38										
39										
40										
41										
42										
43										
44										
45										
46										
47										
48										
49										
50										
51										
52										
53										
54										

5/88
Printed in England

Throttle linkage

The procedures described relate to a complete overhaul of the throttle linkage mechanism. In service, the operator need only select those passages relevant to his particular task.

The throttle linkages fitted to all models are very similar (see fig. K2-2) and can be divided into three basic sub-assemblies as follows.

Throttle body linkage
The linkage fitted to the primary and secondary throttle spindles is identical for all cars. However, there is an area at the rear of the throttle housing where a permutation of one or two stub pipe(s) and blank(s) prevents the assembly from being interchangeable.

Intermediate linkage
The intermediate linkage is very similar for all cars, the only minor differences being in the length and shape of the long rod and lower jaw connecting the mechanism to the underfloor linkage.

Underfloor linkage
This linkage is similar for the various models but naturally differs between left-hand drive and right-hand drive.

Throttle body linkage – To overhaul

1. Withdraw the starter relay.

Note If the throttle housing is not to be removed carry out Operation 3 and then proceed to Operation 6.

2. Remove the mixture control unit, refer to Chapter B.
3. Unscrew the nut and withdraw the pinch bolt from the control rod to throttle body linkage joint. Unscrew the joint pad and release the ball.
4. Disconnect the spring from both the front and rear of the linkage.
5. Unscrew the four setscrews that secure the throttle housing to the induction manifold. Collect the washers, withdraw the housing and gasket. Blank off the manifold openings.
6. Release the lock-washer from around both the primary and tha secondary throttle spindle securing nuts.
7. Withdraw the linkage and collect the metal sealing washer from each spindle.
8. Unscrew both screws retaining the throttle position switch. Collect the washers and withdraw the switch.
9. Lightly mark the throttle butterflies to ensure that they are assembled in their original positions.
10. Carefully close the split legs of the butterfly screws. Unscrew the retaining screws and withdraw the butterflies.

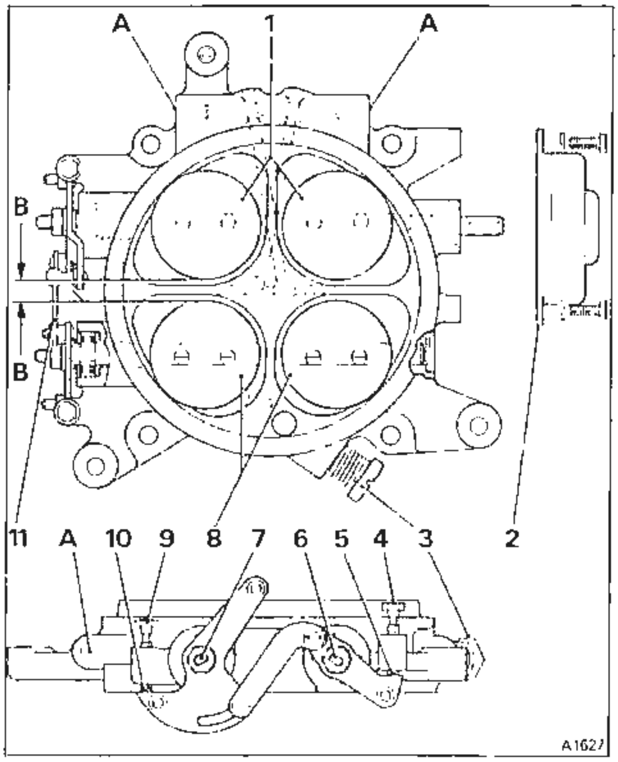

Fig.K2-1 **Throttle body linkage**

1	Primary throttle butterflies
2	Throttle position switch
3	Idle speed adjusting screw (if fitted)
4	Locking screw (secondary throttles)
5	Adjusting screw (secondary throttles)
6	Secondary throttle spindle
7	Primary throttle spindle
8	Secondary throttle butterflies
9	Locking screw (primary throttles)
10	Adjusting screw (primary throttles)
11	Throttle linkage
A	Vacuum signal tappings
B	0,0381 mm (0.0015 in) feeler gauge

11. Withdraw the primary and secondary throttle spindles.

Both spindles should be carefully tapped out from the bearing end (i.e. towards the throttle position switch end), collect the blank from the end of the secondary spindle.

If the bearings are also to be removed, carefully tap the secondary spindle to remove the blank and then drive each spindle out of the housing towards the bearing end (i.e. from the throttle position switch end).

12. Unscrew the idle speed adjusting screw, together with its spring.

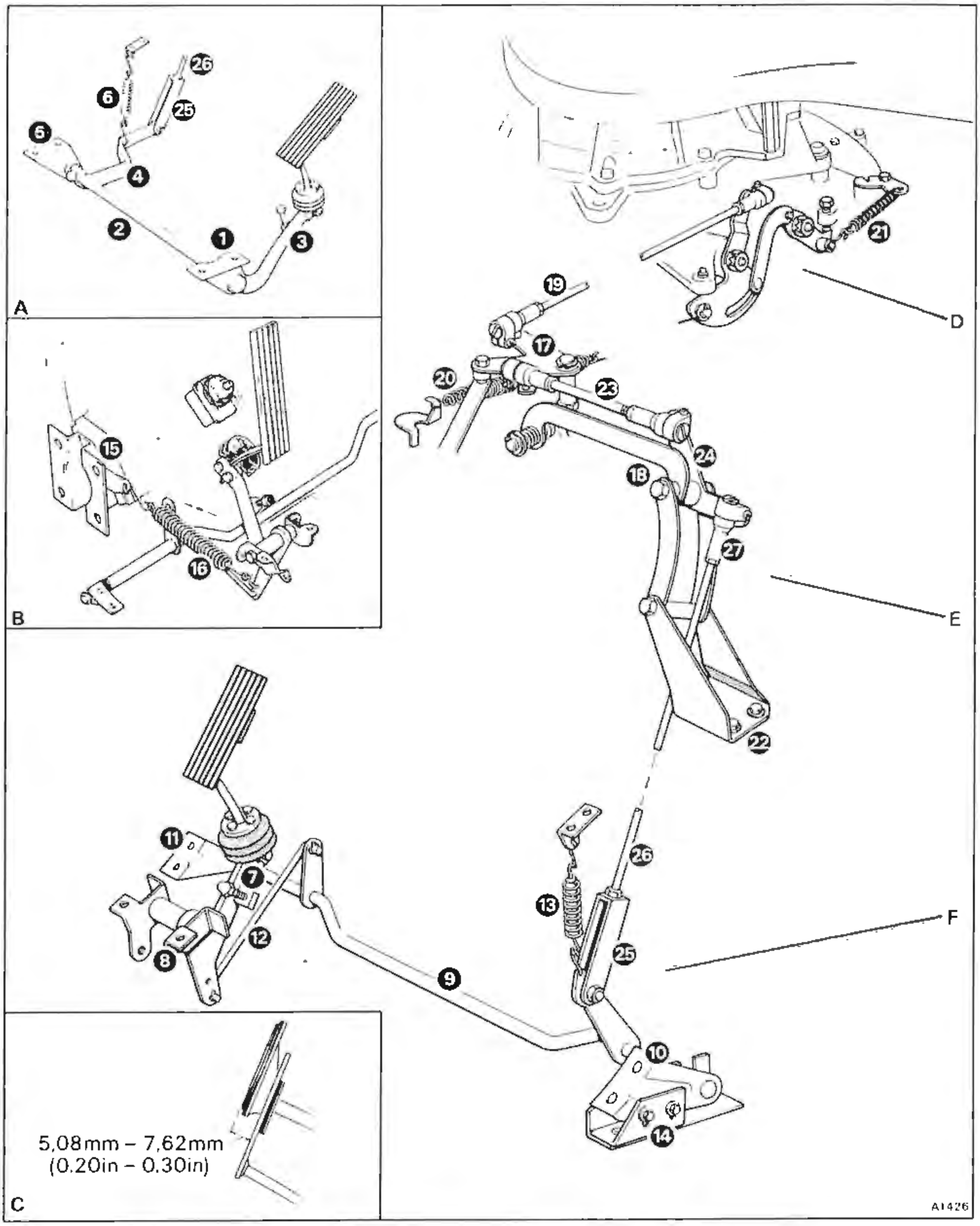

Fig. K2-2 Throttle linkage

- A Underfloor linkage (right-hand drive cars)
- B Additional throttle return spring (*cars conforming to a Canadian and USA specification)*
- C Relationship between accelerator and brake pedals
- D Throttle body linkage
- E Intermediate linkage
- F Underfloor linkage (left-hand drive cars)

13. Clean all parts.
14. Examine the throttle spindles and bearings for wear and excessive play.
15. Ensure that the throttle butterflies and their respective seating areas are not damaged.
16. Before fitting the butterfly shaft bearings, ensure that the outer surface of each is coated with an approved sealant (i.e. Wellseal).
17. Examine the linkage mechanism and springs for damage or breakage.
18. Assemble the throttle body by reversing the procedure given for dismantling, noting that a new gasket should be fitted between the throttle housing and the manifold. Also note the following **basic settings that must be carried out.**
19. Check the **throttle stop screws**, to ensure that there is a gap of 0,0381 mm (0.0015 in) between the raised edge of the secondary butterfly disc and the throttle body, with the throttle body linkage resting against the secondary throttle adjustment screw. If there is any discrepancy between the gaps on each secondary butterfly disc it is the larger gap that should comply with the dimension quoted.

To adjust the gap, first unscrew and remove the original locking screw (without a head). A new locking screw will then be required.

If new parts are to be fitted the gap should be set by rotating the adjustment screw. Screw in the new locking screw until it just contacts the top of the adjustment screw. Do not tighten to break off the head.
20. Repeat Operation 19 on the primary throttle butterfly discs.
21. If necessary (i.e. when new parts have been fitted) tighten the **primary throttles locking screw** until the head of the screw breaks off. Ensure that the adjustment screw situated below the locking screw has not moved by checking that the gap between the primary throttle butterfly discs and their respective bore is still 0,0381 mm (0.0015 in).

If movement has occurred, adjust by filing the underside of the adjusting screw.

Note If new parts have been fitted, do not break the head off the secondary locking screw. This is carried out during the engine tuning sequence given in Chapter B.

22. Fit the **throttle position switch**, setscrews, and washers. Lightly clamp the switch. Rotate the switch to a position where the switch 'clicks' closed as the primary throttle lever touches its stop. Tighten the switch securing screws and then check that the switch does not prevent the primary lever from resting against its stop.
23. Connect a multi-meter across the pins marked 2 and 18 on the switch and carry out a continuity test. Ensure that the switch contacts are closed (circuit continuous) with the throttles closed and that the switch opens as the throttles just begin to move open.
24. Connect the multi-meter across the pins marked 3 and 18 on the switch and carry out a continuity test. Ensure that when the primary throttles are moved to the fully open position the switch contacts close (circuit continuous).
25. Unscrew (open) the idle speed setting screw five complete turns from the fully closed position.

Note On 1989 model year turbocharged cars this screw should remain fully closed.

26. The throttle body and linkage are now complete as a sub-assembly with all the basic settings carried out.
27. Fit the throttle body and linkage assembly to the induction manifold.

Throttle linkage – To assemble and set (see fig. K2-2)
All bearings and ball joints should be lubricated with Molytone 265 grease prior to assembly.

When adjusting a ball joint, always screw the adjustable pad fully in and then gradually slacken it until there is free movement of the joint, without free play.

1. Set the accelerator pedal off-stop screw to an initial length of 30,38 mm (1.20 in). This dimension should be taken from the top of the boss on the lever to the top of the adjustment screw. Tighten the lock-nut.

Right-hand drive cars
2. Fit the right-hand mounting bracket (item 1) for the accelerator cross-shaft.
3. Insert the cross-shaft (item 2) through the longeron. Fit the accelerator pedal lever (item 3) and insert the cross-shaft into the bush in the right-hand mounting bracket.
4. Mount the control operating lever (item 4) on the opposite end of the cross-shaft, but do not fit the pinch bolt.
5. Fit the left-hand mounting bracket (item 5) onto the cross-shaft. Screw the bracket to the underside of the body.
6. Tighten the accelerator pedal lever pinch bolt.
7. Fit the accelerator pedal to the lever. Check that the pedal fits centrally in the rubber boot. Tighten the pinch bolt, ensuring that the pedal lever assembly still rotates freely.
8. Adjust the cross-shaft end-float to between 0,13 mm and 0,38 mm (0.005 in and 0.015 in) bending the mounting brackets if necessary.

Check that the cross-shaft rotates freely.
9. Fit the return spring (item 6) using the hooks.
10. Slide the control operating lever into its correct position. Fit the pinch bolt and tighten the nut.

Note *Cars produced to an Australian or Japanese specification* should have the operating lever positioned in the groove nearest to the longeron. All other cars should have the levers fitted in the other groove.

Left-hand drive cars
2. Build a sub-assembly of the accelerator pedal lever (item 7), the pivot bolt and mounting brackets (item 8). Check that the lever moves freely between the brackets.
3. Fit the accelerator pedal lever assembly to the body and check that the lever moves freely.
4. Fit the accelerator pedal to the lever. Check that

Printed in England

the pedal fits centrally in the rubber boot. Tighten the pinch bolt, ensuring that the pedal lever assembly still rotates freely.

5. Fit the accelerator cross-shaft (item 9) into the mounting brackets and fit the mounting brackets (items 10 and 11) to the body longerons.

6. Adjust the cross-shaft end-float to between 0,13 mm and 0,38 mm (0.005 in and 0.015 in) by bending the brackets. Check that the cross-shaft rotates freely.

7. Using the rod (item 12) connect the pedal lever to the cross-shaft. Use the lowest hole. Lock the split pins and check that the rod moves freely.

8. Fit the cross-shaft return spring (item 13) using the hooks.

9. Fit the heatshield (item 14) to the cross-shaft mounting bracket.

10. *On cars built to a Canadian and USA specification,* fit the spring anchor (item 15) to the upper rear engine mounting and fit the additional return spring (item 16) between the anchor and the pedal lever as shown in inset B.

All cars

11. Check that the brake pedal is correctly set (the accelerator pedal is set relative to the brake pedal).

Ensure that there is a minimum clearance of 99,44 mm (3.915 in) between the seal housing and the underside of the brake pedal.

Note Full instructions for setting the brake pedal are given in Workshop Manual TSD 4700, Chapter G–Hydraulic systems.

12. Check that the accelerator pedal lies between 5,08 mm and 7,62 mm (0.2 in and 0.3 in) below the brake pedal as shown in inset C. If not, reset of the off-stop screw.

13. Assemble the bellcrank (item 17) and trapeze isolator (item 18) levers.

14. Using the control rod (item 19) connect the bellcrank lever to the ball joint on the throttle body linkage. Set the length of the control rod to dimension A between the inner faces of the lock-nuts.

15. Fit the throttle body linkage return springs (items 20 and 21) using the hooks.

16. Fit the isolator bracket (item 22) to the body longeron.

17. Using the control rod (item 23) set the length to dimension B between the inner feces of the lock-nuts.

Connect the bellcrank lever to the fulcrum lever (item 24) on the trapeze isolator mechanism using the control rod.

18. Fit the jaw (item 25) situated at the lower end of the long rod (item 26) to the control operating lever.

19. Set the length of the long rod to e nominal dimension between the inner faces of the lock-nuts, as follows.

Right-hand drive cars to dimension C.

Left-hand drive cars to dimension D.

20. Offer the upper end ball joint (item 27) on the long rod to the fulcrum lever and connect the ball joint.

21. Ensure that the entire throttle linkage operates smoothly.

22. Check that full throttle and kick-down are available. If not, adjust the length of the long rod.

23. Ensure that the throttles close fully when the accelerator pedal is released.

24. With the engine at normal operating temperature but not running, repeat Operations 21 to 23 inclusive.

25. Carry out the engine tuning procedure given in Chapter B.

Dimension	**Model year**
A 52,07 mm–53,34 mm (2.05 in–2.10 in)	1987/88
A 54,36 mm–56,90 mm (2.14 in–2.24 in)	1989
B 78,74 mm–81,28 mm (3.10 in–3.20 in)	1987/88
B 64,26 mm–66,80 mm (2.53 in–2.63 in)	1989
C 434,34 mm (17.10 in)	1987/88
C 485,14 mm (19.10 in)	1989
D 441,96 mm (17.40 in)	1987/88
D 492,76 mm (19.40 in)	1989

Special torque tightening figures

Contents	Sections						
	Rolls-Royce			Bentley			
	Silver Spirit	Silver Spur	Corniche / Corniche II	Eight	Mulsanne / Mulsanne S	Turbo R	Continental
Contents and issue record sheet	L1	L1	L1	L1	L1	L1	L1
1987/88/89 model years Special torque tightening figures	L2	L2	L2	L2	L2	L2	L2

5/88
Printed in England

Special torque tightening figures

Introduction
This section contains the special torque tightening figures applicable to this Workshop Manual.

For standard torque tightening figures refer to Chapter P, in Workshop Manual TSD 4700.

Components used during manufacture of the vehicle have different thread formations (Metric, UNF, UNC, etc.). Therefore, when fitting nuts, bolts, and setscrews it is important to ensure that the correct type and size of thread formation is used.

Chapter B	Ref.	Component	Nm	kgf m	lbf ft
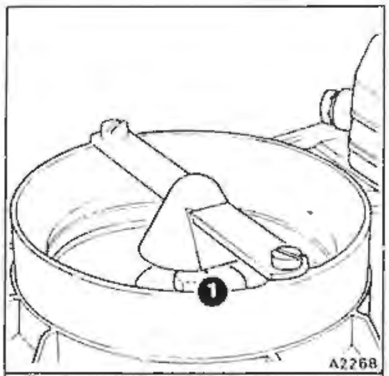	1	Air flow sensor plate – setscrew	5	0,5 – 0,55	44 – 48 lbf. in.
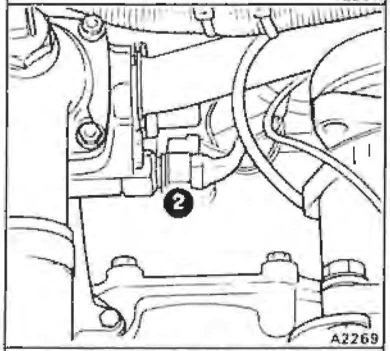	2	Thermal time switch	30	3,0	22
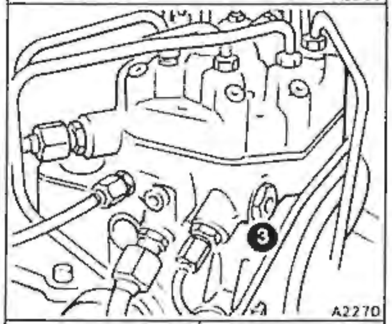	3	Primary system pressure regulator (large hexagon)	13 – 15	1,3 – 1,5	9,5 – 11
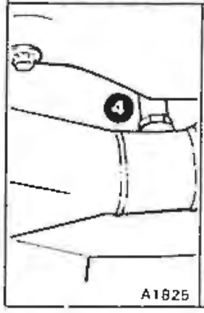 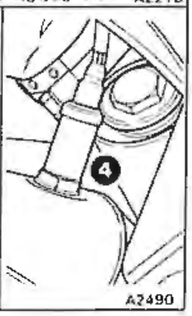	4	Oxygen sensor When fitting an oxygen sensor, always smear the threads with Never-seez assembly compound. Do not allow the assembly compound onto the slotted shield below the threaded portion	50 – 59	5,1 – 6,1	37 – 44

Printed in England

Chapter C

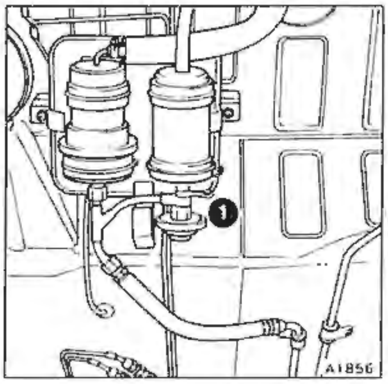

Ref.	Component	Nm	kgf m	lbf ft
1	Fuel pressure damper to fuel pump When tightening the component ensure that the pump outlet is held firmly with a spanner, otherwise the flexible pump mounts may be strained	16 – 24	1,7 – 2,5	12 – 18

Chapter D

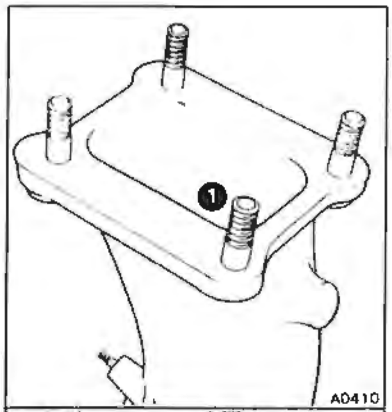

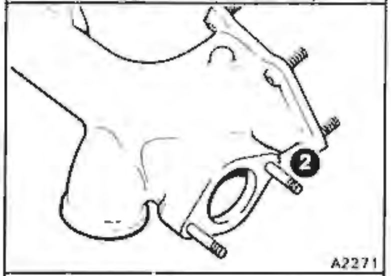

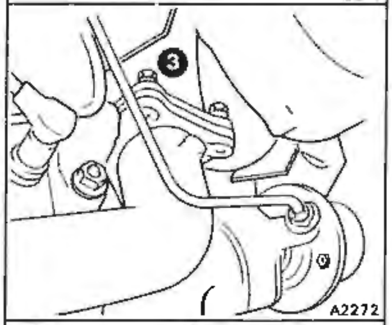

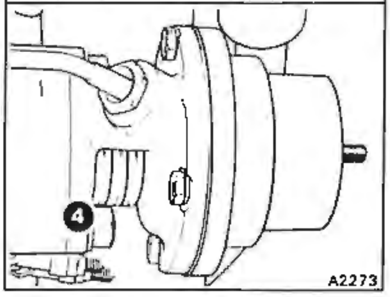

Ref.	Component	Nm	kgf m	lbf ft
1	Turbocharger assembly to exhaust manifold – stud 4 off	11 – 13	1,2 – 1,3	8 – 10
2	Wastegate assembly to exhaust manifold – stud 2 off	11 – 13	1,2 – 1,3	8 – 10
3	Turbocharger assembly to exhaust manifold – nut 4 off	17,7 – 20	1,8 – 2,0	13 – 15
4	Wastegate assembly to exhaust manifold – nut 2 off	17,7 – 20	1,8 – 2,0	13 – 15

Issue record sheet

The dates quoted below refer to the issue date of individual pages within this chapter.

Sections	L1	L2								
Page No.										
1	5/88	5/88								
2		5/88								
3	5/88	5/88								
4										
5										
6										
7										
8										
9										
10										
11										
12										
13										
14										
15										
16										
17										
18										
19										
20										
21										
22										
23										
24										
25										
26										
27										
28										
29										
30										
31										
32										
33										
34										
35										
36										
37										
38										
39										
40										
41										
42										
43										
44										
45										
46										
47										
48										
49										
50										
51										
52										
53										
54										

Printed in England

Chapter F	Ref.	Component	Nm	kgf m	lbf ft
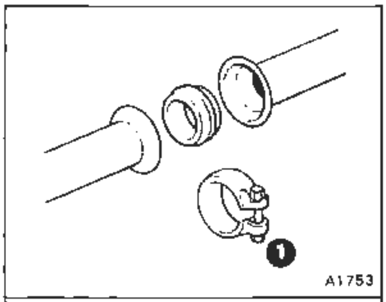	1	Spherical clamp – nut	20	2,0	15
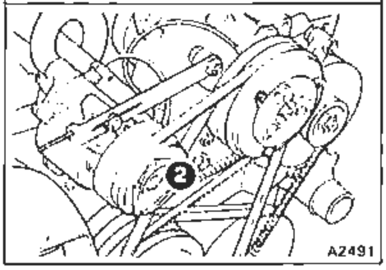	2	Air pump clutched pulley – nut	34	3,5	25

Printed in England

Workshop tools

Contents	Sections						
	Rolls-Royce			Bentley			
	Silver Spirit	Silver Spur	Corniche/ Corniche II	Eight	Mulsanne/ Mulsanne S	Turbo R	Continental
Contents and issue record sheet	M1	M1	M1	M1	M1	M1	M1
1987/88/89 model years Workshop tools	M2	M2	M2	M2	M2	M2	M2

10/91
Printed in England

Issue record sheet

The dates quoted below refer to the issue dates of individual pages within this chapter.

Sections	M1	M2
Page No.		
1	10/91	10/91
2		
3	10/91	
4		
5		
6		
7		
8		
9		
10		
11		
12		
13		
14		
15		
16		
17		
18		
19		
20		
21		
22		
23		
24		

Sections
Page No.
1
2
3
4
5
6
7
8
9
10
11
12
13
14
15
16
17
18
19
20
21
22
23
24

10/91
Printed in England

Workshop tools

RH 8090	Pliers
RH 8725	Flowmeter
RH 9607	Adapter (for use with pressure tester)
RH 9608	Mixture adjusting tool
RH 9609	Guide ring
RH 9612	Pressure tester (6 bar gauge used on K-Jetronic)
RH 9873	Pressure tester (10 bar gauge used on K-Jetronic, KE2-Jetronic, and K-Motronic)
SPM1390/1	'Firtree' type nipple and nut
RH 9613	Fuel delivery quantity comparison tester
RH 9614	Injector test equipment
RH 9615	* 'Closed loop' system tester (Only use with RH 9979)
RH 9645	Hose and adapter (for use with pressure tester)
RH 9876	CO sample tapping adapter (for use on naturally aspirated cars fitted with catalytic converters)
RH 9881	Adapter (fuel distributor)
RH 9893	Adapter (electrical connection to EHA)
RH 9928	Removal/Fitting tool (fuel tank sender unit and in-tank filter)
RH 9960	Accessory kit (comprising fuel distributor adapters and AFS plate operating screw)
RH 9979	*Connection lead (Only use with RH 9615)
RH 12207	Setting tool (engine speed sensor air gap)
RH 12210	K-Motronic ECU interrogator (for use on turbocharged cars without the on-board fault diagnosis capability)
RH 12211	Atlas Copco belt tension meter
RH 12495	Mityvac vacuum/pressure pump and gauge assembly
RH 13014	* 'Closed loop' system tester (Only use with RH 13015)
RH 13015	*Connection lead (Only use with RH 13014)

* Alternatives in sets
(Use on cars with a K-Jetronic fuel injection system and a catalytic converter(s) fitted in the exhaust system)

Printed in England

Chapter N

Running changes

Contents	Sections						
	Rolls-Royce			Bentley			
	Silver Spirit	Silver Spur	Corniche / Corniche II	Eight	Mulsanne / Mulsanne S	Turbo R	Continental
Contents and issue record sheet	N1	N1	N1	N1	N1	N1	N1
No. 1 The fitting of two air pressure transducers	N2	N2	N2	N2	N2	N2	N2
No. 2 1988 Model year changes (Swiss or Austrian specification)	N3	N3	N3	N3	N3	N3	N3
No. 3 K-Motronic ECU interrogator RH 12210						N4	
No. 4 Atlas Copco belt tension meter RH12211	N5	N5	N5	N5	N5	N5	N5

Printed in England

Issue record sheet

The dates quoted below refer to the issue date of individual pages within this chapter.

Sections	N1	N2	N3	N4	N5					
Page No.										
1	1/89	5/88	1/89	1/89	1/89					
2				1/89	1/89					
3	1/89									
4										
5										
6										
7										
8										
9										
10										
11										
12										
13										
14										
15										
16										
17										
18										
19										
20										
21										
22										
23										
24										
25										
26										
27										
28										
29										
30										
31										
32										
33										
34										
35										
36										
37										
38										
39										
40										
41										
42										
43										
44										
45										
46										
47										
48										
49										
50										
51										
52										
53										
54										

1/89
Printed in England

Running changes
No 1 The fitting of two air pressure transducers

During production of the 1987 model year Bentley Turbo R, a change was introduced to the method of signalling induction manifold pressure to both the fuel injection system ECU and the boost control system ECU.

Originally, the signalling operation was carried out by one air pressure transducer (APT). The unit received a voltage feed from the fuel injection system ECU. Then, dependent upon induction manifold pressure (either positive or negative pressure), it electrically signalled the information primarily to the fuel injection system ECU and also to the boost control system ECU.

A modified crankcase was introduced during production of 1987 model year cars, that resulted in a change of frequency pick-up by the knock sensors, during detonation. This demanded a finer tuned system and therefore, a second identical APT was fitted adjacent to the existing unit (see fig. N2-1).

The fuel injection system and the boost control system now have their own APT which works independently of the other. Each APT receives its voltage feed from its own ECU and dependent upon induction manifold pressure, electrically signals the information back to its respective ECU.

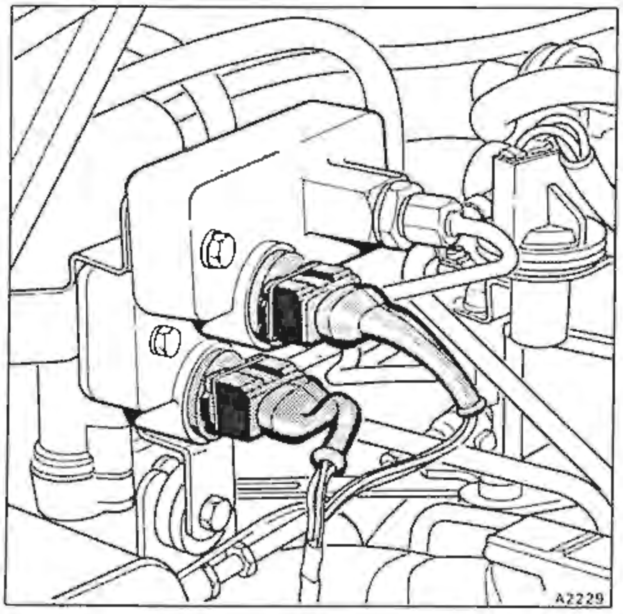

Fig. N2-1 Air pressure transducers

Running changes
No 2 1988 Model year changes

The information contained within this running change up-dates the manual for 1988 model year cars.

The main changes to the various build specifications affect cars produced to a Swiss or Austrian specification. For the 1988 model year these cars are fitted with a catalytic converter and a power train very similar to that fitted to cars produced to a North American specification. The only differences are that the Swiss and Austrian cars do not have an oxygen sensor warning lamp on the facia. They do however, have a new type of exhaust gas sample tapping (see fig N3-1) fitted in front of the catalytic converter.

The other change that affects all 1988 model year cars is that the model year identification letter in the vehicle identification number (VIN) has changed. The tenth digit in the VIN of 1988 model year cars is the letter J (e.g. ✱SCAZSO2A6JCX21057✱).

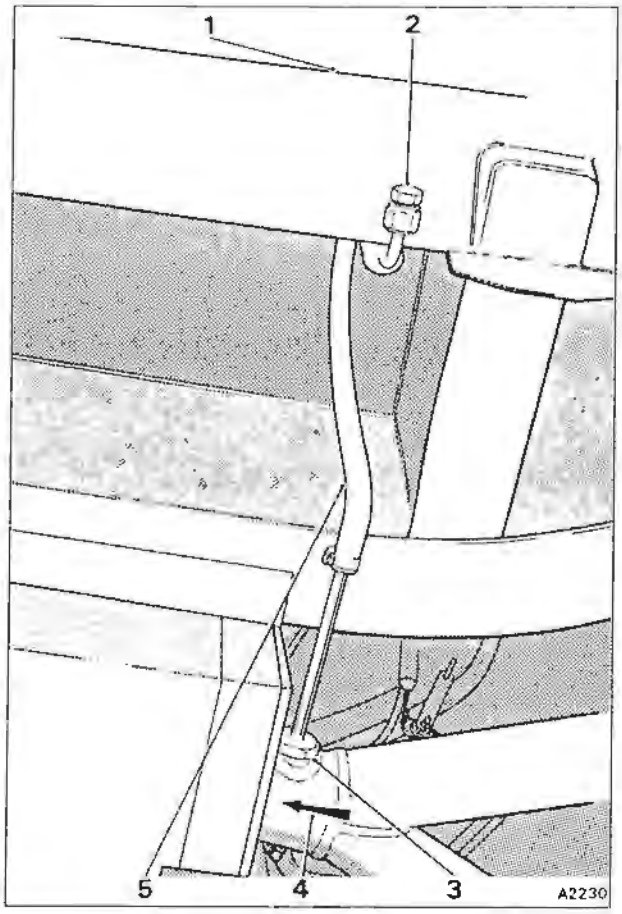

Fig. N3-1 Exhaust gas sample take-off
1 Outside edge of vehicle
2 Tube end cap
3 Exhaust adapter
4 Exhaust gas flow into catalytic converter
5 Heat resistant flexible tube

Running changes
No 3 K-Motronic ECU interrogator RH 12210

1989 model year Bentley Turbo R motor cars are equipped with a Bosch K-Motronic engine management system.

The K-Motronic electronic control unit (ECU) provides a self diagnostic fault finding facility for the engine management system.

On cars fitted with full emission control systems including catalytic converters, this fault finding facility is interpreted as a blink code via the facia mounted CHECK ENGINE warning panel. Refer to Chapter B, Section B4 for full details.

On all other 1989 model year turbocharged cars, the K-Motronic ECU incorporates the self diagnostic capability but there is no 'on-board' facility for displaying the information. To carry out a fault finding check on these cars use test box RH 12210. This test box will interrogate the K-Motronic ECU and exhibit its findings as blink codes on the test box indicator lamp.

The procedure for using the interrogator is as follows.

1. Ensure that the usual workshop safety precautions are carried out.
2. Open the cover to reveal the main fuseboard.
3. Closely inspect the area below and behind the fuseboard (see fig. N4-1). Locate the two cables, one green/yellow, the other black, taped back into the loom. These two cables should be freed and positioned as shown in the illustration.

Note If the ECU has not previously been interrogated by this method it may be necessay to improve access to the loom. Disconnect the battery. Refer to TSD 4848 and release the fuseboard assembly from its mounting. Carefully move the fuseboard assembly into the car to provide the improved access.

. If the ECU has been subjected to interrogation by this method previously, the green/yellow and the black cables will be readily accessible and Operations 4 to 7 inclusive omitted.

4. Ensure that the two cables are insulated.
5. Connect the battery.
6. Carry out a thorough road test on the car.
7. Upon return, carry out the usual workshop safety precautions. Ensure that the ignition is switched off and withdraw fuse B5 from fuse panel F1 on the main fuseboard.
8. Connect the test box RH 12210 to the car as shown in figure N4-1.
9. Insert fuse B5 and note that the indicator lamp on the test box is illuminated.
10. Turn the ignition key to the RUN position.
11. Depress the button on the test box for a minimum of four seconds.
12. Release the button and monitor the blink code displayed on the test box indicator lamp.

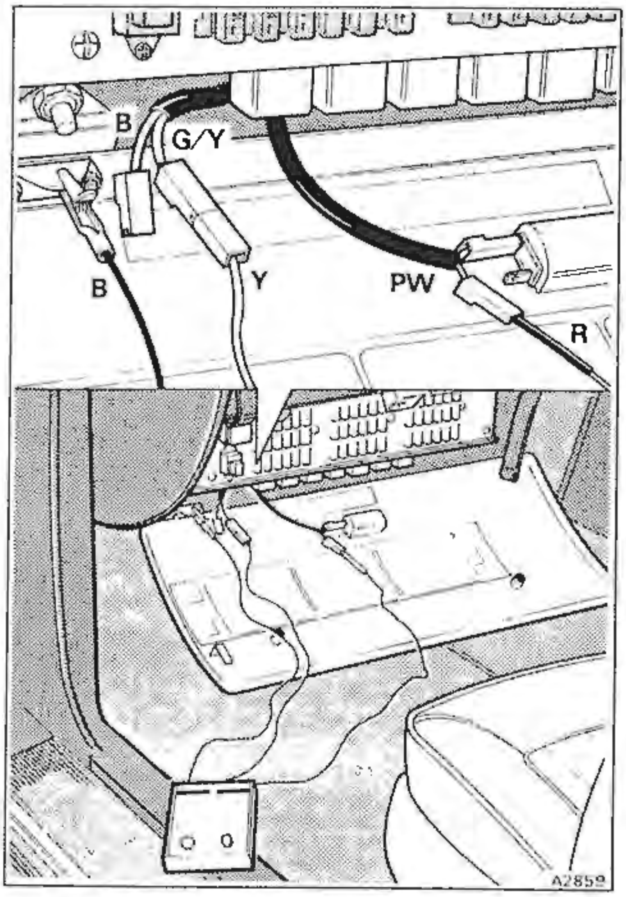

Fig. N4-1 Bosch K-Motronic interrogator in position

The initial period will be 2.5 seconds lamp on and 2.5 seconds lamp off. Afterwards, the fault code will be revealed (see fig. N4-2).

The fault code 4.4.3.1. is shown in the illustration.

13. Once a blink code has been initiated, it will keep repeating the information (with further initiation periods identifying blink code commencement), until the button on the test box is depressed for another four seconds period.

This procedure must be repeated until all stored blink codes have been extracted from the K-Motronic ECU.

14. If there are no more fault codes stored, the condition is identified by the unique code 1.1.1.1. The test box indicator lamp on/off periods for this code are of 2.5 seconds duration.
15. To reset the ECU following fault extraction and/or rectification, isolate the vehicle battery for more than four seconds. Use the master switch located in the luggage compartment, whenever possible.
16. If there are no faults stored in the ECU, the blink

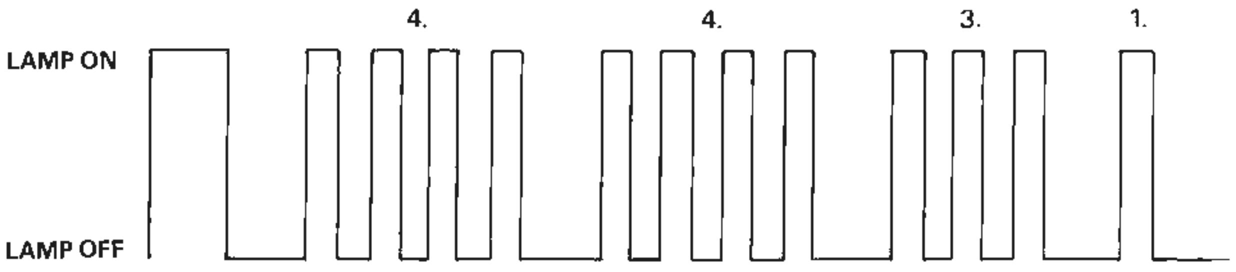

Example blink code 4.4.3.1.

Blink code	Fault description	System method of recognition	Limp home facility
4.4.4.4.	No faults stored		
4.3.1.2.	Engine reference sensor and/ or its connection to the ECU defective	Synchronization lost	Dependent upon ECU data update prior to the engine reference sensor failure
2.3.1.2.	Coolant temperature sensor output outside operating range	Coolant temperature less than –46°C (–50.8°F) or more than 186°C (366.8°F)	K-Motronic ECU provides EHA with mA compensation equivalent to 80°C (176°F) coolant temperature for all operational modes other than starting which is set to 20°C (68°F)
2.2.3.2.	Incorrect air flow signal	Volumetric air flow rate outside pressure upper and lower limits	Ignition and fuelling switched to full load map
2.1.2.1.	Idle switch fault. Idle control maps not recognised	Idle switch closed. Air sensor plate voltage ratio greater than 0.56 for more than 0.3 seconds	Ignition and fuelling switched to part load map
2.1.2.3.	Full load switch fault. Full load control maps not recognised	Full load switch closed but ECU recognises part load engine operation for more then 0.3 seconds	Ignition and fuelling switched to part load map
2.1.1.3.	Engine speed sensor and/or connection to the ECU defective. Air sensor plate mechanism or fuel distributor plunger stuck	Ignition switched on, volumetric air flow rate more than $9m^3$/hr but no engine speed signal	None
4.4.3.1.	Idle speed actuator connecting plug open or short circuit	End stage within K-Motronic ECU	Limp home engine idle speed of 900 rev/min. Normal engine operation except idle mode
1.1.1.1.	No more faults stored in ECU memory	Blink lamp on/off periods for this code are of 2.5 seconds duration	

Fig. N4-2 Bosch K-Motronic ECU fault codes

code 4.4.4.4. will register on the test box indicator lamp.

17. Upon completion of the tests, switch off the ignition, withdraw fuse B5 from fuse panel F1 on the main fuseboard, and remove the test box connections.

18. Connect the cable to the fuseboard illumination lamp.

19. Insulate the green/yellow and the black cables. Tape them back to the loom behind the fuseboard, ensuring that they are safe but accessible for future use.

The importance of correctly insulating and stowing these two cables cannot be over emphasized. The cable connectors must not be allowed to contact other components.

20. Insert fuse B5.

Running Changes
No 4 Atlas Copco belt tension meter RH 12211

When checking the tension of the air pump driving belt, use the Atlas Copco tension meter RH 12211.

The tension meter consists of two main components, the clamping unit, incorporating a hydraulic cylinder and a trigger operated read-out unit (see fig. N5-1).

The tension meter should be fitted close to the mid-point of the drive belt span, as shown in figure N5-2. The procedure for using the tension meter is as follows.

1. Ensure that the usual workshop safety precautions are carried out.
2. Ensure that the engine is cold. A warm engine will return a higher belt tension reading.
3. Inspect the drive belt for either cracks or glazing. Renew the belt if necessary.
4. Examine the back of the drive belt around the mid-point of the span. If any irregularities are found where the clamping unit is to be fitted, rotate the engine until the area of the belt is acceptable.
5. Belt tension readings should always be taken over one belt only. Therefore, the belt blocker should be fitted prior to using the gauge for the first time and thereafter remain in position in the clamping unit (see fig. N5-1).
6. Open the jaws of the clamping unit by applying pressure at the two points indicated by the arrows in figure N5-1.
7. Position the clamping unit with the jaws open, onto the mid-point of the belt span as shown in figure N5-2. Release the clamping unit.
8. Initially, adjust the small Allen screw situated on the top of the clamping unit until the clamping unit will only just slide along the belt. This operation need only be carried out if the clamping unit is a poor fit on the belt.
9. Squeeze the trigger of the read-out unit. The reading displayed on the gauge when the red lamp illuminates is the belt tension.

Repeat this procedure until the clamping unit has settled on the belt and the readings become consistent. Note this figure.

10. Remove the clamping unit from the belt.
11. Rotate the engine.
12. Repeat Operations 6 to 9 inclusive. The average of the two noted readings is the drive belt tension.

If the two readings vary by more than 45 N (10 lbf), take a third reading by again removing the clamping unit, rotating the engine, and repeating Operations 6 to 9 inclusive. Discard the exceptional value and then average the two remaining readings.

13. Do not adjust the drive belt unless the tension has fallen below the minimum acceptable tension of 200 N (40 lbf).
14. If necessary, adjust the belt tension as described in Chapter F, of this Workshop Manual. The air pump drive belt should be tensioned to a figure of between 250 N and 300 N (55 lbf and 65 lbf).
15. When adjusting the tension of the drive belt, the following points should be noted.

a) the belt should be cold.

b) rotate the engine and check the belt tension several times until a consistent reading is obtained.

c) the pivot fixings should not be loosened by more than is necessary to allow the belt to be tensioned.

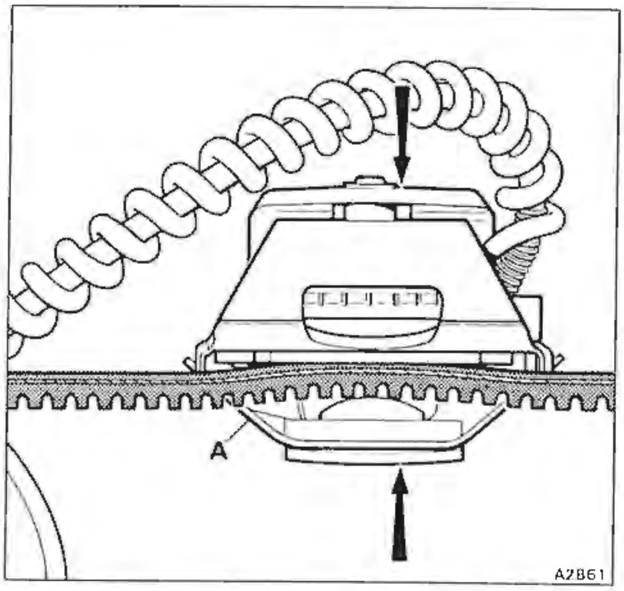

Fig. N5-1 Clamping unit
A Belt blocker

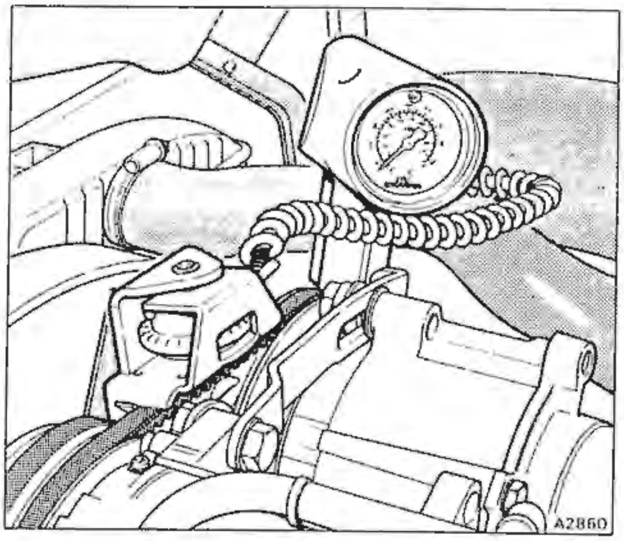

Fig. N5-2 Belt tension meter in position

d) the belt tensioning figures quoted in Operation 14, apply equally to replacement or existing drive belts.
e) if a new belt has been fitted and tensioned, the belt tension must be checked after the engine has run for 15 minutes.