C.I.P.	5,75 Velodog Country of Origin: FR	TAB.	IV
		Date	84-06-14
		Revision	00-06-07

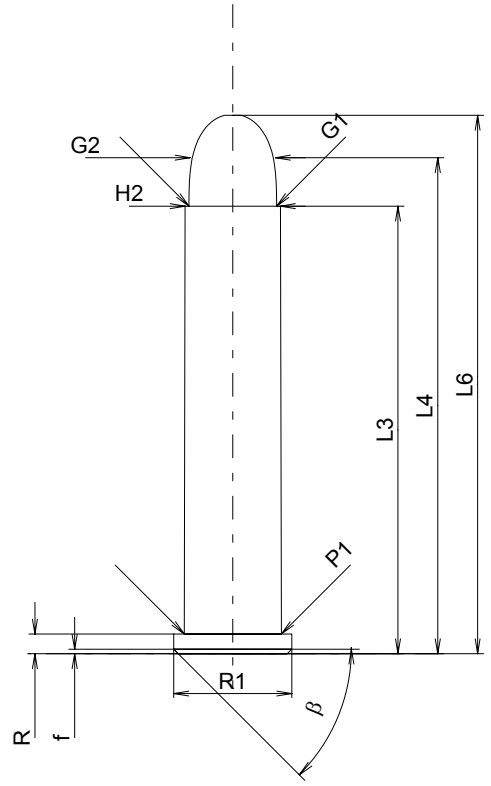

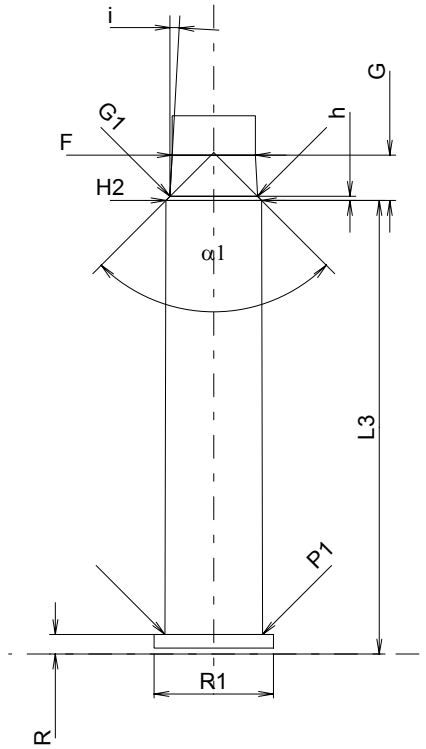

Scale 2:1

CARTRIDGE MAXI

Lengths

L1	=		
L2	=		
L3 1)	=	29.60	
L4	=	32.80	
L5	=		
L6	=	35.60	

Case Head

R 1)	=	1.30	-0.25
R1	=	7.80	
R3	=		
E	=		
E1	=		
e min	=		
δ	=		
f	=	0.30	
β	=	45°	

Powder Chamber

P1	=	6.42
P2	=	

Junction Cone

α	=	
S	=	
r1 min	=	
r2	=	

Collar

H1	=	
H2 1)	=	6.30

Projectile

G1 1)	=	5.79
G2	=	5.65
F	=	
L3+G 1)	=	32.60

Pressures (Energies)
Method Transducer

Pmax	=	680	bar
PK	=	782	bar
PE	=	884	bar
M	=	17.50	

Miscellaneous Dimensions

Fe 1)	=	0.25
delta L	=	

CHAMBER MINI

Lengths

L1	=	
L2	=	
L3 1)	=	30.00

Breech

R 1)	=	1.30
R1	=	7.90
R2	=	
R3	=	
r	=	

Powder Chamber

E	=	
P1 1)	=	6.45
P2	=	

Junction Cone

α	=	
S	=	
r1 max	=	
r2	=	

Collar

H1	=	
H2 1)	=	6.33

Commencement of Rifling

G1 1)*	=	5.80	
G 1)*	=	3.00	
α1	=	90°	
h *	=	0.27	
s	=		
i 1)	=	3°08'42"	
w	=		

Barrel

F 1)*	=	5.50	
Z 1)	=	5.75	

Grooves

b	=	2.30	
N	=	4	
u	=	454.00	
Q	=	24.94	mm²

Dimensions in << mm >>
Dimensions and Tolerances for Proof Barrels
see Appendix CR 1.

Notes: 1) Check for safety reasons
* Basic dimensions